cobas® 6000 analyzer series

Operator´s Manual – Version 8.0
Software Versions 05–02 / 06–01

Publication information

Revision history

Publication version	Software version	Revision date	Change description
1.0	01-01	June 2006	First version
1.1	02-01	September 2007	General update
2.0	02-01 – 02-07	March 2008	General update
3.0	03-01	June 2008	General update
4.0	04-01	February 2009	General update
5.0	05-01	March 2010	General update
5.1	05-01	April 2011	Two safety alerts added
6.0	05-02	July 2013	General update
6.0.1	05-02	March 2014	Minor changes concerning expired reagents and controls
7.0	06-01[(a)]	December 2014	General update
7.1	06-01[(a)]	January 2015	Minor changes
8.0	06-01[(a)]	September 2016	General update

(a) Also valid for software version 05-02

Edition notice

This publication is intended for operators of the **cobas** 6000 analyzer series.

Every effort has been made to ensure that all the information contained in this publication is correct at the time of publishing. However, the manufacturer of this product may need to update the publication information as output of product surveillance activities, leading to a new version of this publication.

Where to find information

The **Online Help** contains all information about the product, including the following:

- Routine operation
- Maintenance
- Safety
- Troubleshooting information
- A software reference
- Configuration information
- Background information

See *The help system of the instrument* on page B-15

The **Operator´s Manual** contains information about safety, hardware modules and operating the system as well as maintenance and troubleshooting.

The manual **Interlock function cobas c 501 with ISE** describes maintenance actions of the **cobas** 6000 analyzer series that can only be performed by special trained person.

General attention

To avoid serious or fatal injury, ensure that you are familiar with the system and safety information before you use the system.

- Pay particular attention to all safety precautions.
- Always follow the instructions in this publication.
- Do not use the instrument in a way that is not described in this publication.
- Store all publications in a safe and easily retrievable place.

Training

Do not carry out operation tasks or maintenance actions unless you have received training from Roche Diagnostics. Leave tasks that are not described in the user documentation to trained Roche Service representatives.

Images

The screenshots and hardware images in this publication have been added exclusively for illustration purposes. Configurable and variable data in screenshots, such as tests, results, or path names visible therein must not be used for laboratory purposes.

Warranty

Any customer modification to the system renders the warranty or service agreement null and void. For conditions of warranty, contact your local sales representative or refer to your warranty contract partner. Always leave software updates to a Roche Service representative, or perform such updates with their assistance.

Copyright

© 2001-2016, Roche Diagnostics GmbH. All rights reserved.

License information

cobas 6000 analyzer series software is protected by contract law, copyright law, and international treaties. **cobas** 6000 analyzer series contains a user license between F. Hoffmann-La Roche Ltd. and a license holder, and only authorized users may access the software and use it. Unauthorized use and distribution may result in civil and criminal penalties.

License agreement for UltraVNC software

UltraVNC is a piece of free software for all commercial uses. It is installed on the control unit PC of the **cobas** 6000 analyzer series.

You can redistribute the software and/or modify it under the terms of the GNU General Public License (version 2 or later), as published by the Free Software Foundation. A copy of the GNU General Public License (version 2) is stored on the control unit PC. The path for the license is C:\Program Files\uvnc bvba\UltraVNC.

The software is distributed without warranty. There is no implied warranty of merchantability or fitness for a particular purpose. For more information, see the GNU General Public License at http://www.gnu.org/licenses.

The source code for the software is stored on the control unit PC. The path for the source code is C:\DriversAndTools\UltraVNC.

Open Source and Commercial Software

cobas 6000 analyzer series may include components or modules of commercial or open-source software. For further information on the intellectual property and other warnings, as well as licenses pertaining to the software programs included in **cobas** 6000 analyzer series, refer to the electronic distribution included with this product.

This open source and commercial software and **cobas** 6000 analyzer series as a whole can constitute a device regulated in accordance with applicable law. For more detailed information, refer to the user manual and labeling.

Please note that the respective authorization is no longer valid according to the corresponding legislation should any unauthorized changes be made to **cobas** 6000 analyzer series.

Trademarks

The following trademarks are acknowledged:

COBAS, COBAS C, COBAS INTEGRA, ELECSYS and LIFE NEEDS ANSWERS are trademarks of Roche.

All other trademarks are the property of their respective owners.

Feedback

Every effort has been made to ensure that this publication fulfills the intended use. All feedback on any aspect of this publication is welcome and is considered during updates. Contact your Roche representative, should you have any such feedback.

Approvals

The **cobas** 6000 analyzer series meets the requirements laid down in:

Directive 98/79/EC of the European Parliament and of the Council of 27 October 1998 on in vitro diagnostic medical devices.

Directive 2011/65/EU of the European Parliament and of the Council of 8 June 2011 on the restriction of the use of certain hazardous substances in electrical and electronic equipment.

Compliance with the applicable directives is provided by means of the Declaration of Conformity.

The following marks demonstrate compliance:

IVD	For in vitro diagnostic use.
CE	Complies with the IVD directive 98/79/EC on in vitro diagnostic medical devices
c UL us	Issued by Underwriters Laboratories, Inc. (UL) for Canada and the US.

Instrument approvals

Furthermore, the instrument is manufactured and tested according to the following international safety standards:

- IEC 61010-1
- IEC 61010-2-010
- IEC 61010-2-081
- IEC 61010-2-101
- UL 61010-1
- CAN/CSA 61010-1

The instrument complies with the emission and immunity requirements described in standard IEC 61326-2-6/EN 61326-2-6.

The Operator's manual meets the European Standard DIN EN ISO 18113-3.

Fluorinated greenhouse gas

The product contains a fluorinated greenhouse gas in the hermetically sealed refrigeration.

Type	Charge weight (kg)	CO_2 equivalent (tonne)	Global warming potential
R-134a	0.102	0.14	1430

Contact addresses

Inside the European Union and EFTA member states

	Manufacturer of the **cobas** 6000 analyzer series instrument	Hitachi High-Technologies Corporation 1-24-14 Nishi-Shimbashi Minato-ku, Tokyo 105-8717 Japan
EC REP	Authorized representative	Roche Diagnostics GmbH Sandhofer Strasse 116 68305 Mannheim Germany

Outside the European Union and EFTA member states

Manufactured by:	Hitachi High-Technologies Corporation
Manufactured for:	Roche Diagnostics GmbH Sandhofer Strasse 116 68305 Mannheim Germany

Table of contents

Publication information 2
Contact addresses 5
Table of contents 7
Intended use 9
Symbols and abbreviations 9
What is new in publication Version 8.0? 13

System description Part A

1 General safety information
Safety classifications A–5
Safety precautions A–6
Safety labels of the system A–22
Safety information for barcode readers A–30
Interlock function A–31
Disposal of the instrument A–32

2 Overview modules
Overview A–35
Modules of the **cobas** 6000 analyzer series A–36

3 Control unit, cobas link and core unit
Control unit A–45
cobas link A–47
Core unit **cu** 150 A–52
Trays, racks, tubes, and cups A–59

4 c 501 module
Overview A–71
Sampling area components A–74
Reagent area components A–76
Reaction disk area components A–81
Behind the front doors A–90
Rear view A–92
ISE area components A–93

5 e 601 module
Overview A–99
Reagent area components A–101
Reaction area components A–103
Pre-wash area components A–105
Consumables area components A–107
Auxiliary reagents and cleaning solutions A–110

6 Specifications
General system specifications A–115
Control unit A–122
Core unit **cu** 150 A–122
c 501 module A–123
e 601 module A–126

Operation Part B

7 Software basics
General description of the user interface B–5
The help system of the instrument B–15
Main menus B–24

8 Daily operation
Overview B–33
Starting the analyzer B–34
Preroutine operation B–47
Routine operation B–65
Shutting down the analyzer B–78

9 Orders and results
Overview B–83
Barcode and non-barcode mode B–84
Test Selection screen B–85
Data Review screen B–93
Calib. Review screen B–101
Tracking samples on the analyzer B–103

10 Reagents
Reagent concept – **c** 501 B–109
Reagent concept – **e** 601 B–119
Operator-related reagent management B–129
Reagent Setting screen B–130
Reagent Status screen B–135
Reagent Overview button B–146

11 Calibration
Calibration concept B–159
Calibration concept – **c** 501 B–162
Calibration concept – **e** 601 B–166
Calibration concept – masking B–169
Overview B–170
Calibration Status screen B–170
Calibration Calibrator screen B–182
Calibration Install screen B–185
System Overview screen B–198

12 QC
QC concept B–201
Overview B–206
QC Status screen B–206
QC Run Status screen B–211
QC Individual screen B–213
QC Cumulative screen B–221
QC Control screen B–222
QC Install screen B–224
Automatic QC measurement B–232

13 Extended operation
Instrument status B–237
Interlock function: Reset after stop B–239
Masking functions B–240
Backup operation B–244
Data storage B–248

14 Configuration
Application B–255
Description of application parameters B–264
System configuration B–281
Module Set B–291
Calculated Tests (**c** 501) B–295
Special Wash B–301
Report Format B–310
Saving system parameters B–314
Restoring system parameters B–316

Maintenance Part C

15 General maintenance
Overview C–5
Maintenance pipes C–10
Maintenance types C–18
Maintenance report C–22
Maintenance schedules C–23
Automating instrument care with maintenance pipes C–32
Background and parallel maintenance C–34
List of maintenance items C–38
List of maintenance checks C–43

16 Maintenance cu 150
Maintenance schedule C–49
Daily maintenance C–50
Monthly maintenance C–53
Every six months maintenance C–58
As needed C–61

17 Maintenance c 501 with ISE
Maintenance schedule C–69
Periodic replacement of parts C–71
Daily maintenance C–72
Weekly maintenance C–81
Monthly maintenance C–88
Every three months maintenance C–102
Every six months maintenance C–105
As needed maintenance C–110

18 Maintenance e 601
Maintenance schedule C–121
Daily maintenance C–122
Weekly maintenance C–125
Every two weeks maintenance C–141
Every three months maintenance C–144
As needed C–147

Troubleshooting Part D

19 Data alarms
Introduction D–7
Data alarm list D–10
Data alarms **c** 501 (ISE) D–12
Data alarms **c** 501 (P) D–20
Data alarms **e** 601 module D–32
Data alarms for calibrations D–43
Data alarms for controls D–55
Data problems without alarm D–60
Rerun list D–63

20 Troubleshooting
General troubleshooting D–67
Instrument troubleshooting D–70
c 501 (ISE) troubleshooting D–74
c 501 (P) troubleshooting D–79
e 601 troubleshooting D–86

Glossary Part E

Index Part F

Notes Part G

Intended use

The **cobas** 6000 analyzer series is a fully automated, random-access, software-controlled system for immunoassay and photometric analysis intended for qualitative and quantitative in vitro determinations using a wide variety of tests. The **cobas** 6000 analyzer series is a powerful tool for complete diagnostic laboratory automation. It is optimized for high throughput workloads using a combination of an ion selective electrode (ISE) and photometric analysis (**c** 501 module), and an immunoassay analysis module (**e** 601 module).

This publication has detailed descriptions of features of the **cobas** 6000 analyzer series and general operational concepts, specification functions and use of controls, operating techniques, emergency procedures, product labeling and maintenance procedures.

Observe the instructions of the Operator's Manual for safe operation of the system

- If the system is used in a manner not specified in this Operator's Manual, the protection provided by the system may be impaired.
- Keep this manual in a safe place to ensure that it is not damaged and remains available for use.
- This Operator´s Manual should be easily accessible at all times.

Symbols and abbreviations

Product names

Except where the context clearly indicated otherwise, the following product names and descriptors are used.

Product name	Descriptor
cobas 6000 analyzer series	System
cobas c 501 module	**c** 501 module
cobas e 601 module	**e** 601 module
cobas cu 150 module	**cu** 150 module
cobas c pack	reagent cassette
cobas e pack	reagent cassette
cobas e-library	Software
cobas link	Software
Sample Cup	standard cup
Micro-Sample Cup	micro cup
AssayTip/AssayCup tray	magazine
WasteLiner	solid waste box

Symbols used in the publication

Symbol	Explanation
►	Start of procedure
■	End of procedure
•	List item
👁	Cross-reference
💡	Tip
⚠	Safety alert

Symbols used on products

Symbol	Explanation
GTIN	Global Trade Item Number.
Cont.	Quantity contained in the package.
CONTENT	Quantity contained in the package.
RoHS	Complies with the directive 2011/65/EU on RoHS.
	Disposal of electronic equipment.

Abbreviations The following abbreviations are used:

Abbreviation	Definition
A	
Abs	Absorbance
ACN	Application code number
ANSI	American national standards institute
A.U.	Analytical unit (module short name and measuring cell, if applicable)
C	
c 501 (ISE)	ISE unit of the **c** 501 module
c 501 (P)	Photometric unit of the **c** 501 module
CLAS 2	Clinical laboratory automation system 2
CSA	Canadian standards association
CSF	Cerebrospinal fluid
D	
DIL	Diluent
E	
e 601	**cobas e** 601 module for immunoassay analysis
EC	European community
ECL	Electrochemiluminescence
EN	European standard
F	
FBT	False bottom tube
H	
HbA1c	Hemoglobin A1c, glycosylated hemoglobin
HPE	High priority elecsys
I	
IEC	International electrical commission
IS	Internal standard (ISE module)
ISE	Ion selective electrode
IVD	In vitro diagnostic
K	
KCL	Potassium chloride, reference solution for the ISE unit of the **c** 501 module
kVA	Kilovolt-ampere. unit for expressing rating of AC electrical machinery.
L	
LDL	Lower detection limit *see* analytical sensitivity
LIS	Laboratory information system
LLD	Liquid level detection

Abbreviation	Definition
M	
MPA	MODULAR PRE-ANALYTICS
N	
n/a	Not applicable
NaCl	Sodium chloride
NG	Not good (calibration)
P	
PC/CC	ProCell M (ProCell) /CleanCell M (CleanCell)
PRE	Pretreatment reagent for immunoassays
PSM	Process system manager (software)
Q	
QC	Quality control
R	
RCM	Reaction calculation mode
REF	Reference solution for ISE module
RF	Radio frequency
R.M.	Result message
RoHS	Restriction of Hazardous Substances Directive
R.P. or R. pack	**cobas e** pack (reagent pack)
RRM	Rack reception mode
S	
SCCS	Special cell cleaner solution
SD	Standard deviation
SMS	Selective mode solution (Detergent for special washes of reagent probes)
STAT	Short turn-around time
Std	Standard, commonly used for calibrator
SVGA	Super video graphics adapter
T	
TPA	Tripropylamine
U	
UL	Underwriters laboratories Inc.
UPS	Uninterruptible power supply
W	
WEEE	Waste Electrical and Electronic Equipment

What is new in publication Version 8.0?

This section provides an overview of all major changes in this publication.

This publication version was updated as output of product surveillance activities. No new features were added to the system and therefore there are no new features described in this update.

Formally revisions

According to current standards, national and international laws and local regulations some changes have been placed.

- The contact addresses for the manufacturer and authorized representative were revised.
- The license agreement for UltraVNC software was added.
- The statements for RoHS directives were added.
- The information for electromagnetic compatibility was revised.
- The information for fluorinated greenhouse gas was added.

Software version

This documentation is valid for the software version 05–02 and 06–01.

COBI-CD

The COBI-CD was renamed to *Basic Analytical Principles*. The content was implemented in the Online Help and is no longer available on CD.

Racks

The section Racks was revised. MPA racks are also described.

Filling volume of tubes

Advice for maximum filling volume of tubes was added.

Change of column width

If the column width in lists is set too small some characters will be hidden. In the **Result** column, this could lead to displayed incomplete result.

A new section was added to the chapter Software basics. A warning message and a tip were added to the relevant sections.

ISE acceptance criteria

The ISE acceptance criteria for the electrodes were revised.

Masking of modules

The description of masking and unmasking modules was revised.

*Maintenance **cu** 150*

Maintenance description for cleaning racks and rack trays were added.

System description A

1 *General safety information* *A-3*
2 *Overview modules* *A-33*
3 *Control unit, cobas link and core unit* *A-43*
4 *c 501 module* *A-69*
5 *e 601 module* *A-97*
6 *Specifications* *A-113*

General safety information

Before operating with the **cobas** 6000 analyzer series it is essential that the warnings, cautions, and safety requirements contained in this manual, as well as the explanation of safety labels on the system are read and understood by the user.

In this chapter

Chapter **1**

Safety classifications A-5
Safety precautions A-6
Operator qualification A-6
Commissioning and decommissioning A-6
Relocation and transportation A-7
Disposal A-7
Operating conditions A-7
Power interruption A-7
Electromagnetic compatibility A-8
Safe and proper use of the instrument A-8
Personal protection measures A-9
Biohazardous materials A-9
Electrical safety A-11
Mechanical safety A-12
Reagents and working solutions A-13
Skin contact A-13
Fire and burns A-13
Incorrect results A-13
Samples A-14
Reagents A-15
Instrument covers A-16
Others A-16
Sample loss A-17
Software and data security A-18
Unauthorized access A-18
Incorrect or corrupt data A-19
USB storage devices A-19
Computer viruses A-19
Third-party software A-19
Backup A-20

Instrument damage A-20
Moving parts A-20
Spillage A-20
Cleaning agents A-21
Excessive weight A-21
Safety labels of the system A-22
Front view A-24
Side view A-26
Top view A-27
Rear view A-29
Safety information for barcode readers A-30
Interlock function A-31
Disposal of the instrument A-32

Safety classifications

This section explains how precautionary information is presented in the manual.

The safety precautions and important user notes are classified according to ANSI Z535.6 Standards. Familiarize yourself with the following meanings and icons:

Safety alert

The safety alert symbol is used to alert you to potential physical injury hazards. Obey all safety messages that follow this symbol to avoid possible damage to the system, injury, or death.

These symbols and signal words are used for specific hazards:

WARNING

Warning

Indicates a hazardous situation which, if not avoided, could result in death or serious injury.

CAUTION

Caution

Indicates a hazardous situation which, if not avoided, could result in minor or moderate injury.

NOTICE

Notice

Indicates a hazardous situation which, if not avoided, may result in damage to the instrument.

Important information which is not safety relevant, is indicated with the following icon:

Tip

Indicates additional information on correct use or useful tips.

Safety precautions

Pay attention to the following safety precautions!

If you ignore them you may be killed or suffer serious injuries.

Each precaution is important.

Keep in mind that the hazard warnings in this manual and on the instrument cannot cover every possible case, as it is impossible to predict and evaluate all circumstances beforehand.

Just following the given directions may, therefore, be inadequate for operation. Always be alert and use your common sense.

Operator qualification

As a user, you are required to be a licensed person according to your country's specific laws. You must have sound knowledge of relevant safety precaution guidelines and standards and of the information and procedures contained in the Operator´s Manual.

- Do not carry out operation and maintenance unless you have been trained by Roche Diagnostics to do so.
- Leave maintenance, installation, or service that is not described in the Operator´s Manual to the Roche service representative.
- Carefully follow the procedures specified in the Operator´s Manual for the operation and maintenance.
- Follow standard laboratory practices, especially when working with biohazardous material.

Commissioning and decommissioning

Only the Roche service representatives can perform commissioning.

For installation described in the Operator´s Manual (such as *Installing an application*), follow the installation instructions carefully.

Correct grounding of the power supply cord is essential for the correct function of the analyzer. The system can only be connected to a power supply source with the specified power supply cord and only by authorized personnel.

- Contact your Roche service representative for any changes to the power supply cord.

Relocation and transportation

Do not attempt to relocate or transport the instrument.

- Leave relocation and transportation to trained and authorized Roche Diagnostics personnel.

Disposal

For information about disposal of the instrument, see *Disposal of the instrument* on page A-32.

Operating conditions

Operation outside the specified ranges may lead to incorrect results or malfunction of the instrument.

- Never modify the instrument.
- Ensure that the instrument is operated in compliance with the system specifications.
- Use the instrument indoors only and avoid heat and humidity.
- Make sure that the instrument's ventilation openings remain unobstructed at all times.
- Perform maintenance according to the specified intervals to maintain the operating conditions of the instrument.
- Keep the Operator’s Manual in a safe place to ensure that it is not damaged and remains available for use. This Operator’s Manual must be easily accessible at all times.

Power interruption

A power failure or momentary drop in voltage may damage the instrument or lead to data loss.

- Operate only with an uninterruptible power supply (UPS).
- Ensure regular maintenance of the UPS.
- Perform regular backups of measurement results.
- Do not switch off the power while the PC accesses the hard disk or another storage medium.

Electromagnetic compatibility

This instrument complies with the standard IEC 61326-2-6/EN 61326-2-6. It has been designed and tested to CISPR 11 Class A. In a domestic environment it may cause radio interference, in which case, you may need to take measures to mitigate the interference.

- The electromagnetic environment should be evaluated prior to operation of the instrument.
- Do not operate this instrument in close proximity to sources of strong electromagnetic fields (for example, unshielded intentional radio frequency sources), as they may interfere with proper operations.
- Do not operate the following devices in close proximity to the instrument:
  - Mobile phone
  - Transceiver
  - Cordless phone
  - Other electrical devices that generate strong electromagnetic fields

Safe and proper use of the instrument

For safe and proper use of the instrument, observe the following information.

Fatigue due to long hours of operation

Looking at the monitor screen over an extended period of time may lead to eye strain or body fatigue.

- Take a break for 10 to 15 minutes every hour to relax.
- Avoid spending more than 6 hours per day looking at the monitor screen.

Instrument unused for an extended period of time

If the instrument is not used for an extended period of time, the main circuit breaker must be switched to OFF.

- Remove, cap, and refrigerate any remaining reagents.
- For information on power off for a period up to 7 days and power on after this time, see the corresponding maintenance chapter.

  See *Extended Power OFF procedures* on page C-156.
- For information on power off for a period more than 7 days and power on after this time, call the Roche service representative.

  The necessary procedure is performed by your Roche service representative.

Approved parts

Use of non-approved parts or devices may result in malfunction of the instrument and incorrect results. It also may render the warranty null and void.

- Only use parts and devices approved by Roche Diagnostics.

Personal protection measures

This section describes how you can minimize your own risk during operation or maintenance.

Personal protective equipment

Wear appropriate protective equipment, including, but not limited to: safety glasses with side shields, fluid-resistant lab coat, and approved disposable gloves.

Wear a face shield if there is a chance of splash or splatter.

Handling of reagents and other working solutions

Reagents, calibrators, and controls must be handled, stored, and disposed of according to the instructions for use.

You are responsible for handling, storing, and disposing of samples and chemicals in accordance with the appropriate standards.

Biohazardous materials

Contact with samples containing material of human origin (for example, sample, waste) may result in infection. All materials and mechanical components (for example, reaction system, waste systems) associated with samples of human origin are potentially biohazardous.

- Follow standard laboratory practices, especially when working with biohazardous material.
- Keep the top and the front cover closed while the system is operating.
- Always switch the system to maintenance or shutdown mode before working with an opened cover (for example, cleaning or maintenance).
- Wear appropriate protective equipment.
  See *Personal protective equipment* on page A-9.
- If any biohazardous material is spilled, wipe it up immediately and apply disinfectant.
- If sample or liquid waste comes into contact with your skin, wash it off immediately with soap and water and apply a disinfectant. Consult a physician.

Spilled sample

The sample containers may vibrate during rack transport. Sample may be spilled on the transport mechanisms.

- Avoid overfilling sample tubes and cups.
- Only use specified sample tubes and cups.
- Leave approximately 10 mm clearance between the liquid and the top of the sample tube or cup.
- If sample is spilled on the instrument, wipe it up immediately and apply disinfectant. Be sure to wear protective equipment.

Sharp objects

Contact with probes may result in infection.

- When wiping probes, use several layers of gauze and wipe from the top down.
- Be careful to not puncture yourself.
- Wear appropriate protective equipment. Take extra care when working with protective gloves; these can easily be pierced or cut, which can lead to infection.
  See *Personal protective equipment* on page A-9.

Instrument mechanism

Aerosols could be formed inside the instrument, which are potentially hazardous. Contact with the sampling mechanism or other mechanisms may result in biohazardous contamination, causing personal injury and/or infection.

- Whenever possible, keep all of the instrument's covers closed and in place.
  - Do not open any cover while the instrument is operating or is performing maintenance.
  - Before starting any operation or maintenance, be sure to close and lock the top cover.
  - When working with an open top cover while the instrument is powered on (for example, for cleaning probes), always switch the system to **Maintenance** or **Shut Down** mode first. Observe all instructions given in the Operator´s Manual very carefully.
  - Allow only trained personnel access to the keys of the instrument covers.
  - Do not use the key for any purpose other than locking and unlocking the cover.
- During cleaning and maintenance, wear appropriate protective equipment. Take extra care when working with protective gloves; these can easily be pierced or cut, which can lead to infection.

  See *Personal protective equipment* on page A-9.
- Do not touch any parts of the instrument other than those specified. Keep away from moving parts during system operation.
- During operation and maintenance of the instrument, proceed according to the instructions.

Waste Contact with liquid waste may result in infection. All materials and mechanical components associated with the waste systems are potentially biohazardous.

- Wear appropriate protective equipment.
  See *Personal protective equipment* on page A-9.
- If any biohazardous material is spilled, wipe it up immediately and apply disinfectant.
- If liquid waste comes into contact with your skin, wash it off immediately with water and apply a disinfectant. Consult a physician.

Waste must be treated in accordance with the relevant laws and regulations. Any substances contained in reagents, calibrators, and quality controls, which are legally regulated for environmental protection, must be disposed of according to the relevant water discharge facility regulations. For the legal regulations on water discharge, please contact the reagent supplier.

Two kinds of liquid waste are discharged by the instrument:

- Concentrated liquid waste that contains highly concentrated reaction solution. Treat this waste as infectious waste. Dispose of this waste according to the appropriate local regulations.
- Dilute waste: A non-concentrated liquid waste diluted with rinsing water from cell wash or water from the incubator bath. When using NaOH-D for washing the reaction cells, alkaline concentration is 0.1 to 1.0 mmol/L in terms of sodium hydroxide equivalence. Dilute waste is discarded through tubes at the rear of the instrument.

When disposing of any waste generated by the instrument, do so according to the relevant laws and local regulations.

Liquid waste and replacement parts such as reaction cells and ISE electrodes have to be treated as infectious medical waste.

For information on disposal of the instrument, see *Disposal of the instrument* on page A-32.

Electrical safety

Removing the covers of electronic equipment can cause electric shock, as there are high voltage parts inside. In addition, opening the top cover of a photometric module (**c** 501) during operation can also cause electric shock.

- Do not attempt to work in any electronic compartment.
- Do not remove any covers from the instrument other than those specified in the Operator's Manual.
- Only authorized and qualified Roche Diagnostics personnel are authorized to perform an installation, service, and repair of the system.

Mechanical safety

Contact with the instrument mechanism could result in personal injury.

- Keep all covers closed and in place while the system is operating.
- Always switch the system to **Maintenance** or **Shut Down** mode first, before working with an open cover (for example, cleaning or maintenance).
- Only trained and authorized Roche Diagnostics personnel should have access to the keys for the protective covers of the system.
- Do not touch any parts of the system other than those specified. Keep away from moving parts during operation.
- Do not put your hands into the pathway of any moving parts during instrument operation.
- During operation and maintenance, proceed according to the instructions.

Fan

Contact with the cooling fan during operation of the instrument may result in personal injury. There is a grille to protect the user from coming into contact with the moving fan.

- Do not insert your fingers into the opening of the ventilation grille.
- Shut down the instrument before cleaning. If you clean the fan while the instrument is not in shutdown mode, you risk personal injury.

Pierce pin

A pierce pin for **cobas c** packs is located adjacent to the reagent probe rinse station. Contact with the pierce pin may result in personal injury.

- Do not touch the pierce pin and gripper during operation, cleaning, or maintenance.

Rack transfer mechanism

The rack transfer mechanism can cause personal injury.

- Only load or unload racks when the green light on the rack loader is on.
- Do not insert your fingers or any objects into the rack loading/unloading area while the instrument is operating.
- Keep all covers closed and in place while the instrument is operating.

Cover

Be careful when opening or closing a top cover. If you let go of the handle, the top cover may drop onto your fingers.

- Always keep a firm grip on the handle and do not let go when opening or closing a top cover.
- If a top cover does not stay open properly, please contact your local Roche service representative.

Open cover

Injury to your head or body may be caused by an open cover.

- Be careful not to hit yourself when working with open covers (for example, during maintenance).

Reagents and working solutions

The **cobas** 6000 analyzer series uses reagent and working solutions, such as cleaners or diluents. Observe the following information on reagents and working solutions.

Skin contact

Direct contact with reagents, detergents, cleaning solutions, or other working solutions may cause skin irritation, inflammation, or burns.

- When handling reagents, exercise the precautions required for handling laboratory reagents.
- Wear appropriate protective equipment.
  See *Personal protective equipment* on page A-9.
- Observe the cautions given in the instructions for use.
- Observe the information given in the Material Safety Data Sheets (available for Roche Diagnostics reagents and cleaning solutions).
- Be careful when removing open reagent packs from the instrument. They may contain residues of reagents.
- If a reagent, detergent, or other working solution comes into contact with your skin, wash it off immediately with water and apply disinfectant. Consult a physician.

Fire and burns

Alcohol is a flammable substance.

- Keep all sources of ignition (for example, sparks, flames, or heat) away from the system when conducting maintenance or checks using alcohol.
- When using alcohol on or around the system, use no more than 20 mL at a time.

Incorrect results

An incorrect result may lead to an error in diagnosis, therefore posing danger to the patient.

- For proper use of the instrument, run QC tests and monitor the instrument during operation.
- Do not use reagents or consumables that have exceeded their expiration date, otherwise inaccurate data may be obtained.
- For diagnostic purposes: always assess the results in conjunction with the patient's medical history, clinical examination, and other findings.

Varying factors can influence the accuracy or precision of measured results. Pay particular attention to the following information on risks for incorrect results.

Samples

Any problem regarding the samples can cause incorrect results. Observe the following information on sample handling.

Sample mismatch

Be aware that in **non-barcode** mode there is a risk of sample mismatch. If samples are not placed in the proper positions, incorrect measurement results may occur.

- When operating in non-barcode mode, make sure to load the samples according to the **Requisition List** as provided by the instrument.
- Do not exchange or remove samples.
- Avoid empty positions within the racks. Do not place non-registered samples in any empty rack position.
- Do not insert any gray rack into the STAT port when operating in non-barcode mode because the predefined sequence of samples will be disrupted by the routine rack inserted through the STAT port.
- Do not reload an unloaded rack when working in non-barcode mode. In non-barcode mode, pink racks have to be used to reload samples.

Contamination

Insoluble contaminants in samples, bubbles, or film inside a sample container may cause blockage or pipetting volume shortage leading to compromised measurement accuracy.

- Make sure that samples contain no insoluble contaminants such as fibrin, dust, or bubbles.
- Make sure to prepare enough sample volume for measurement.

If foreign material falls inside the rack loading area, samples may get contaminated.

- Keep the cover of the rack loading area closed while the instrument is operating.
- Do not place anything on the cover of the rack loading area.

Evaporation of samples

Evaporation of samples may lead to incorrect results. For critical analytes in terms of on-board time, you must ensure a short turn-around time.

- After pipetting, do not leave sample, calibrators, or QC materials in a sample container for any length of time.

Foam or films

Foam, fibrin clots, or bubbles in sample types may cause pipetting volume shortage and lead to incorrect results.

- When loading samples, calibrators, and controls, make sure that they do not contain any foam, fibrin clots, or bubbles.
- Avoid the formation of foam in all sample types (specimens, calibrators, controls).

Carryover

Traces of analytes or reagents may be carried over from one test to the next.

- Take adequate measures to safeguard additional testing and to avoid potentially false results.

Sample volume

When using standard cups or micro cups, the correct sample cup type must be selected. Otherwise, the sample pipetting may be inaccurate and thus lead to inaccurate measurement results.

- Be sure to specify the sample cup type for standard cups and micro cups.

Reagents

Wrong reagent handling could cause incorrect results. Observe the following information on reagent handling.

Reagent volume

In case of an undetected loss of reagent, the instrument pipettes no reagent or the wrong volume of reagent. The system will calculate incorrect results.

- Do not reuse a reagent pack from which reagent was spilled.
- Reload a reagent pack only if you are sure the reagent volumes remained unchanged while it was not on the instrument.
- Do not use a single reagent pack for different instruments.

Reagents, auxiliary reagents, calibrators, and controls are sensitive regarding temperature and/or light, especially if the container is already open.

- Store reagents, calibrators, and controls always according to specified storage conditions.

When using **cobas c** pack MULTI, it must be filled with the exact filling volume specified in the instructions for use. Failure to do so may lead to incorrect results.

Additionally, an alarm (reagent short) may occur if the instrument detects low reagent volume.

- Ensure that the **cobas c** pack MULTI contains the correct filling volume. Refer to the instructions for use.

Expired reagents or mixing reagents

Results obtained using expired reagents are not reliable. Mixing new reagent and residues of old reagent may cause concentration changes or carryover, leading to incorrect results.

- Do not use expired reagents.
- Always store reagents according to the specified storage conditions.
- Do not top off old reagents with new reagents. When a bottle is empty, replace it with a new one.
- Do not leave reagents on the instrument for any length of time.

Foam or films

Foam on top or bubbles in reagents can cause pipetting volume shortage and lead to incorrect results.

- Avoid the formation of foam in all reagent types.
- Do not shake reagents.

Instrument covers

The instrument comprises various covers. Some covers are important for correct results. Observe the following information for instrument covers.

ISE measuring system

If the cover of the ISE measuring system is not reinstalled after maintenance, the temperature level or the noise level may be affected, leading to incorrect results.

- Only perform measurements if the cover of the ISE measuring system is closed.
- Before opening or closing the cover of the ISE measuring system, make sure the **c** 501 module is in standby or powered off.

***e** 601 module*

If the covers of the reagent compartment or the incubator are not reinstalled after maintenance, the temperature may become inaccurate, leading to incorrect results.

- Only perform measurements, when the covers are closed.

Others

Other causes can lead to incorrect results. Observe the following information on other causes.

Foam on ProCell/CleanCell

Foam on the surface of the **e** 601 ProCell/CleanCell reservoirs may also lead to incorrect results.

- Before start of analysis, check that no foam has accumulated on the surface of the **e** 601 ProCell/CleanCell reservoirs.
- Clean the ProCell/CleanCell reservoirs if foam has accumulated.

Incubator temperature

Measuring before the incubator has reached the correct temperature may lead to incorrect results and to incorrect results for the photometer check (maintenance (3) Photometer Check).

Measuring with open top cover or reagent disk cover may lead to abnormal temperature control, which may also cause incorrect results. Depending on the ambient temperature, it can take up to 30 minutes to reach the correct temperature after switching on the analyzer or after exchange of incubation water (maintenance item (5) Incubation Water Exchange).

- Before starting any measurement, check that the temperature of the incubator is within 37 ±0.1 °C (98.6 ±0.2 °F). Select each module on the **System Overview** screen to display the temperature of the incubator bath of the selected module.
- Be sure to close the covers before starting analysis.

Standard cups

Although non-Roche Diagnostics sample cups look similar, they may have a different inner geometry and may have been produced using non-specified materials. The liquid level detection and the level tracking are influenced by the inner geometry of the cup. Thus, air may be pipetted when non-Roche Diagnostics cups are used. This might not be detected under certain circumstances.

Sample cups from other vendors may cause inaccurate sample pipetting, which may lead to incorrect results.

- Use only cups certified by Roche Diagnostics.

Only the following original standard cups are certified by Roche Diagnostics:

- Hitachi standard cup
- **cobas** sample cup (catalog no. 10394246001)

Barcodes

Undetected barcode read errors may lead to sample mismatch and, therefore, to incorrect results.

- Use only barcodes with check digits.

Sample loss

In case of sample loss, there may not be enough sample left for measuring and, therefore, it is impossible to report results for diagnosis. This may lead to false diagnosis.

Stop *(global button)*

Choosing **Stop** (global button) stops all sampling and sample processing, and results in process are lost.

- Before choosing **Stop** (global button), be sure sample processing has finished.

Interlock system

The interlock system of **c** 501 senses top cover opening and immediately stops the operation by cutting off the power. All pipetted samples are lost and must be reloaded.

- Before starting operation or maintenance, be sure to close and lock the top cover.
- Do not open the top cover during operation.

Software and data security

The control unit comprises a personal computer which controls the instrument, monitors the instrument functions, and provides and stores data (for example, test results, patient data, calibration, and control results, and so on). Therefore, there is a risk of unauthorized access and data loss due to malicious software and hacker attacks.

Unauthorized access

Portable storage media can be infected with and transmit computer malware, which may be used to gain unauthorized access to data or cause unwanted changes to software.

The instrument is not protected against malicious software and hacker attacks.

The users are responsible for IT security of their IT infrastructure and for protecting it against malicious software and hacker attacks. Failure to do so may result in data loss or render the instrument unusable.

Roche Diagnostics recommends the following precautions:

- Access to your data and the configuration should only be granted to authorized experts. All user interventions are logged in the system.
- Allow connection to authorized external devices only.
- Ensure that all external devices are protected by appropriate security software.
- Ensure that access to all external devices is protected by appropriate security equipment. Roche Diagnostics strongly recommends the use of a **cobas IT** firewall.
- Do not copy or install any software on the instrument unless it is part of the system software or you are instructed to do so by a Roche service representative.
- If additional software is required, contact your Roche service representative to ensure validation of the software in question.
- Do not use the USB ports to connect other storage devices unless you are instructed to do so by official user documentation or a Roche service representative.
- Exercise utmost care when using external storage devices such as USB flash drives, CDs, or DVDs. Do not use them on public or home computers.
- Before using a removable storage medium, it should be scanned by an antivirus program.
- Keep all external storage devices in a secure place and ensure that they can be accessed by authorized persons only.

Incorrect or corrupt data

The aim of passwords is to ensure that only authorized personnel have access to a system or information source. The combination of your unique user ID and password tells the system who you are and whether you are permitted access or not.

SECURE HANDLING OF YOUR PASSWORD IS CRUCIAL

- Always enter your password unobserved.
- Do not write down your password.
- Never note down the password in a contact form, in the address book, or in a file on the computer.
- Do not disclose your password to anyone.
- Roche Diagnostics will never ask you for your password.
- If you ever disclose your password to anyone, change it immediately afterwards.
- If you think your account has been compromised, then contact your Roche service representative.

USB storage devices

USB storage devices can be used for several kinds of data backups and restores. Wrong handling of a USB storage device may result in data loss or malfunction of the instrument.

- Insert or remove a USB storage device only when the instrument is in standby mode.
- At any one time only one USB storage device can be in use. Before inserting a USB storage device, check that no other USB storage device is inserted.
- Only remove USB storage devices after choosing **USB** (global button).
- Use only USB storage devices that are tested and installed by your local Roche service representative.

Computer viruses

If you detect an unexpected operation or program/data damage, the PC may be infected with a computer virus.

- Never use a program or storage medium that is suspected of containing a virus.
- If you think your PC is infected with a computer virus, call your local Roche service representative. Your local Roche service representative will disinfect your PC and will check the restoration.

Third-party software

Installation of any third-party software that is not approved by Roche Diagnostics may result in incorrect behavior of the instrument.

- Do not install any non-approved third-party software.
- Do not install a commercially available program on the control unit computer or change any PC settings.
- If additional software is required, contact your Roche service representative to ensure validation of the software in question.

Backup

Data may get lost due to aging of the hard disk or due to a hard disk failure because of electric power failure.

- Back up your data (measurement results and system parameters) at regular intervals.
- Use the backup function in a daily maintenance pipe to store relevant data on the hard disk.
- Make a backup copy if you have changed any system parameters.

Instrument damage

During operation, always check for any abnormal sound, water leakages, or other abnormal conditions. If a problem occurs, take suitable safety measures according to the condition and contact your Roche service representative.

Should one of the instrument circuit breakers or fuses blow, do not attempt to operate the instrument before contacting your Roche service representative.

Moving parts

Contact with moving parts may bend the probes or damage some other component. If the system detects a collision, an alarm will sound, stopping the operation immediately.

- Keep all covers closed and in place during operation.
- Do not touch any parts of the instrument other than those specified. Keep away from moving parts during operation.
- Only load or unload racks when the green status LEDs at the rack loading area are on.

Maintenance

If the instrument power is turned ON when performing manual maintenance, parts or tools may contact the instrument mechanisms and damage the instrument.

- Do not power on the instrument while performing manual maintenance.

Spillage

Any liquid spilled on the instrument may result in malfunction or damage of the instrument.

- Do not place samples, reagents, or any other liquid on the surface of the instrument.
- When removing and replacing the reaction cells, be careful not to spill water from the incubator bath.
- If liquid does spill on the instrument, wipe it up immediately and apply disinfectant. Wear protective equipment.

See *Personal protective equipment* on page A-9.

Cleaning agents

Some cleaning agents may damage the instrument. Observe the following instructions to avoid instrument damage during cleaning.

Alcohol or bleach

Alcohol or bleach may damage the surfaces of the instrument.

- Do not use alcohol or bleach to clean the instrument surfaces.

Acid or alkaline solutions

The pre-wash mixer, the incubator, and the AssayCup vortex mixer are made of aluminum. Acid solution or an alkaline solution degrades the metal.

- Do not use an acid solution or an alkaline solution to clean these parts of the instrument.
- Use deionized water to clean these parts of the instrument.

Excessive weight

Excessive weight on the instrument may damage the instrument.

***c** 501 module*

Excessive weight on the cassette table of the **c** 501 module may lead to damage.

- Do not place anything other than **cobas c** packs on the table.
- Maximum load of the table is 2 kg.

***e** 601 module*

Excessive weight on the magazine drawer of the **e** 601 module may lead to damage.

- Do not open the front door of the magazine drawer and do not pull out the magazine drawer when the indicator lamp is off or blinking.
- Pull out the magazine drawer gently and do not lean on the magazine drawer.

Safety labels of the system

Warning labels have been placed on the analyzer to draw your attention to areas of potential hazards. The labels and their definitions are listed below according to their location on the instrument.

The safety labels on the system comply with the following standards: ANSI Z535, IEC 61010, IEC 60417, or ISO 7000.

If the labels are damaged, they must be replaced by your local Roche service representative. For replacement labels, contact your local Roche service representative.

Spillage warning

This label indicates the instrument may be damaged if a spillage occurs within the vicinity of this label. Do not place liquids in this area.

Protective equipment warning

This label indicates protective goggles and gloves should be worn when working within the vicinity of this label as there is a danger of coming into contact with corrosive material.

Warning

This label indicates there is a danger of hazardous situations within the vicinity of this label, which may result in death or serious injury. Refer to the Operator's Manual for safety operation.

Biohazard warning

This label indicates there are potential biohazards within the vicinity of this label. Follow standard laboratory practices for working with biohazardous materials.

Electrical warning

This label indicates there is a danger of coming into contact with electrical components when gaining access to parts of the system marked with this label.

Mechanical parts warning

This label indicates there is a danger of coming into contact with moving mechanical parts within the vicinity of this label.

Sharp object warning

This label indicates there is a danger of coming into contact with sharp objects which may result in injuries.

Hot surface warning

This label indicates the area within the vicinity of this label may be hot. Do not touch this area as you may be burned.

Maximum weight

This label indicates the maximum weight. Do not place anything heavier than the specified weight on the label.

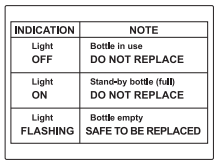

INDICATION	NOTE
Light OFF	Bottle in use DO NOT REPLACE
Light ON	Stand-by bottle (full) DO NOT REPLACE
Light FLASHING	Bottle empty SAFE TO BE REPLACED

Green button light states

This label indicates the meaning of the status of the green button lights. DO NOT perform an action unless the correct state is indicated.

The following sections describe the meaning of the safety labels on the instrument in a short form.

For more information about the safety labels on the instrument, see:
Front view on page A-24
Side view on page A-26
Top view on page A-27
Rear view on page A-29
Safety information for barcode readers on page A-30

In addition to *safety labels* on the instrument there are *safety notes* in the corresponding parts of the Operator's Manual and Online Help.

For more information, see:
Part *Operation* on page B-1
Part *Maintenance* on page C-1

These safety notes give more detailed information about potentially hazardous situations in the context of all kinds of working procedures.

When working with the analyzer be sure to observe both safety labels on the instrument and safety notes in the Operator's Manual and Online Help.

Front view

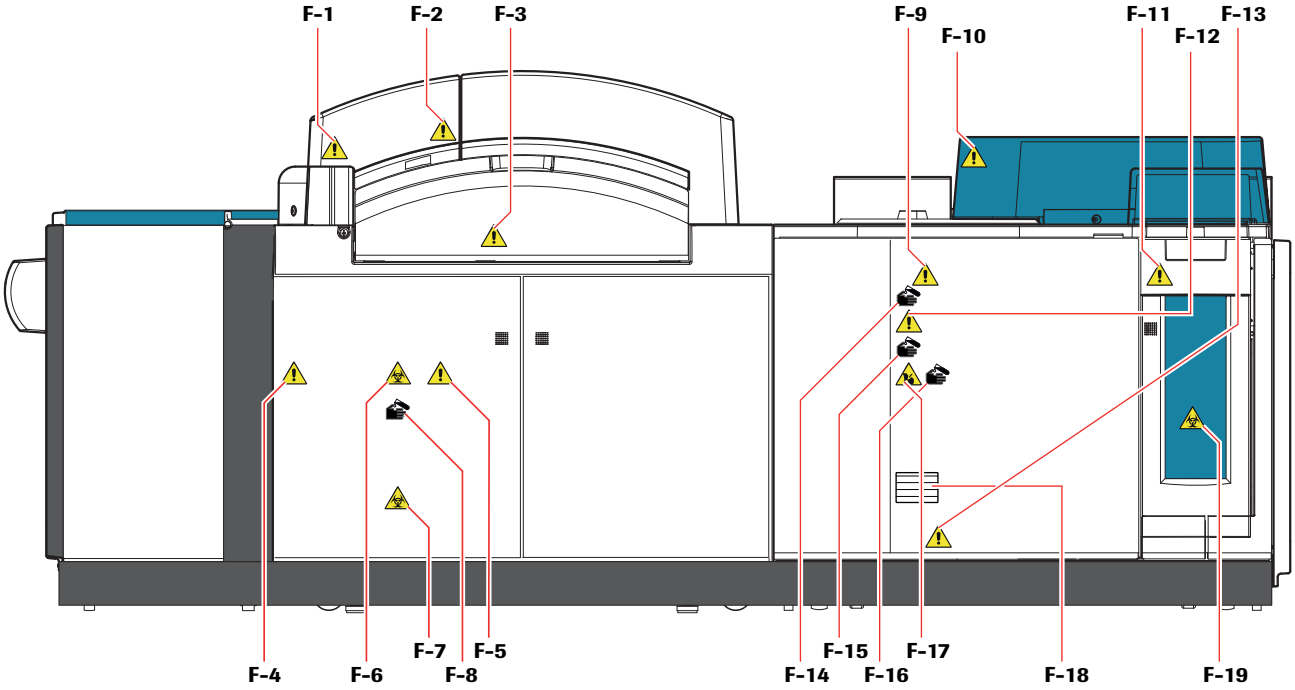

Figure A-1 Front view of the analyzer

F-1		**Attention to interlock!**
F-2		**Caution against contact with pierce pin!**
F-3		**Caution against contact with mechanism!**
F-4		**Caution against pinch by syringe!**
F-5		**Caution against false result due to loose tube connector!**
F-6		**Caution against infection due to contact with sipper syringe!**
F-7		**Caution against infection due to contact with waste from the vacuum tank!**
F-8		**Caution against irritation by detergent and/or reagent!**
F-9		**Caution against pinch by syringe**

F-10		**Caution against injury and infection due to contact with mechanical parts!**
F-11		**Attention to handling the magazine drawer!**
F-12		**Attention to auxiliary reagent setting!**
F-13		**Attention to auxiliary reagent misplacement!**
F-14		**Caution against irritation by detergent and/or reagent!**
F-15		**Caution against irritation by detergent and/or reagent!**
F-16		**Caution against irritation by detergent and/or reagent!**
F-17		**Caution against injury by contact with needle!**
F-18	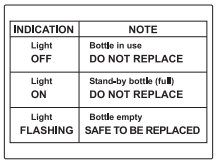	**Attention to the status of the green lights!**
F-19		**Caution against infection due to contact with tips and AssayCups!**

INDICATION	NOTE
Light OFF	Bottle in use DO NOT REPLACE
Light ON	Stand-by bottle (full) DO NOT REPLACE
Light FLASHING	Bottle empty SAFE TO BE REPLACED

Side view

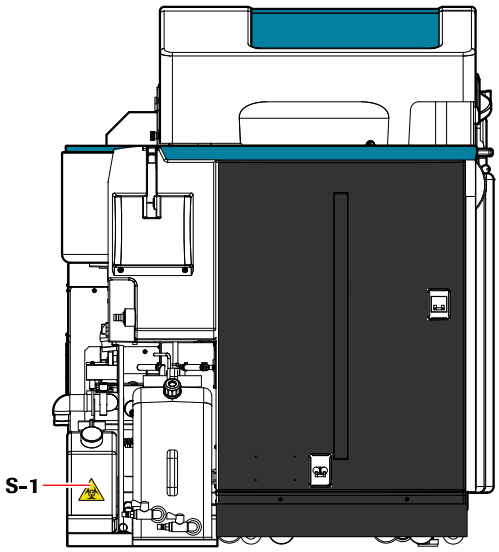

Figure A-2 Right side of the analyzer

S-1		**Caution against infection due to contact with waste solution in waste solution tank!**

Top view

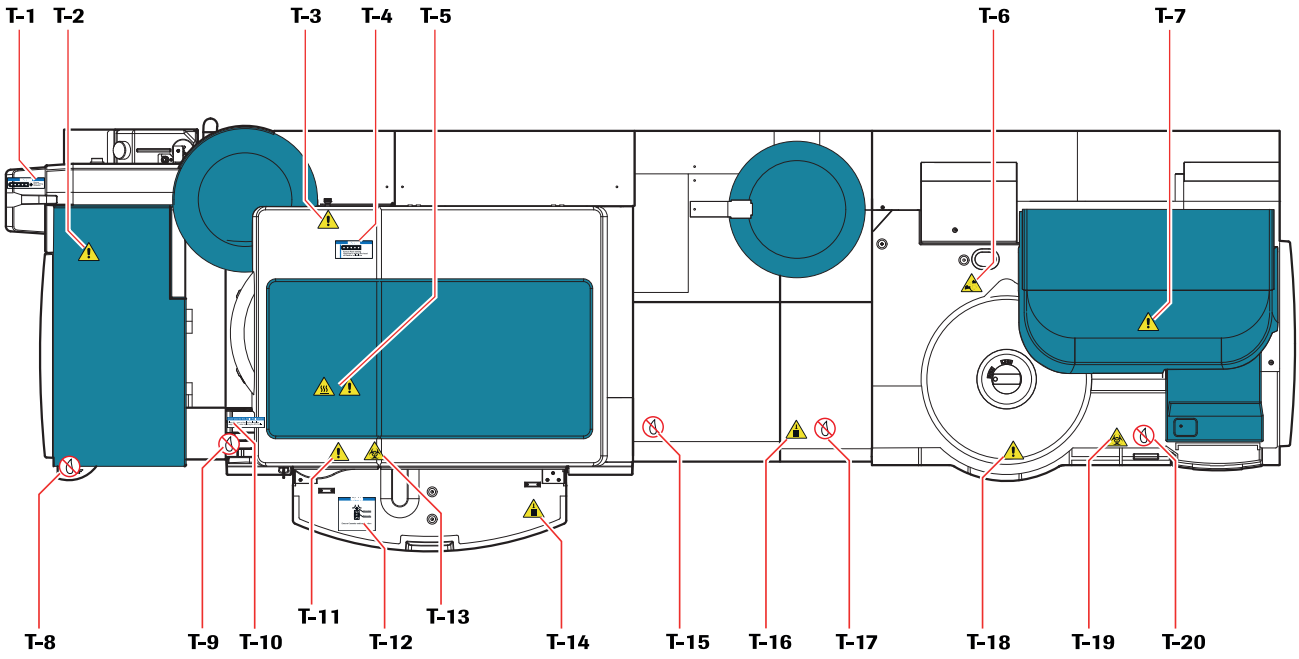

Figure A-3 Top view of the analyzer

T-1		**Attention to rack direction when loading racks at the STAT port!**
T-2		**Attention to sampler cover!**
T-3		**Caution against pinch by rotor mechanism!**
T-4	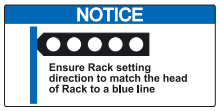	**Attention to rack direction when loading racks at the backup operation port!**
T-5		**Caution against burn at photometer lamp replacement!**
T-6		**Caution against entanglement by reagent disk!**
T-7		**Attention during incubator maintenance!**
T-8		**Instrument damage by water!**
T-9		**Instrument damage by water!**

T-10	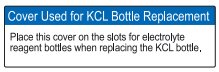	**Reminder to use cover for KCL bottle replacement**
T-11		**Attention when opening or closing ISE cover!**
T-12	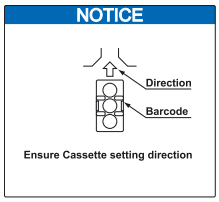	**Attention to cassette direction when loading cassettes!**
T-13		**Caution against infection due to contact with parts of the ISE compartment!**
T-14		**Attention to cassette table maximum weight!**
T-15		**Instrument damage by water!**
T-16		**Attention to cassette table maximum weight!**
T-17		**Instrument damage by water!**
T-18		**Attention when opening or closing reagent disk cover!**
T-19		**Caution against infection due to contact with mechanism!**
T-20		**Instrument damage by water!**

Rear view

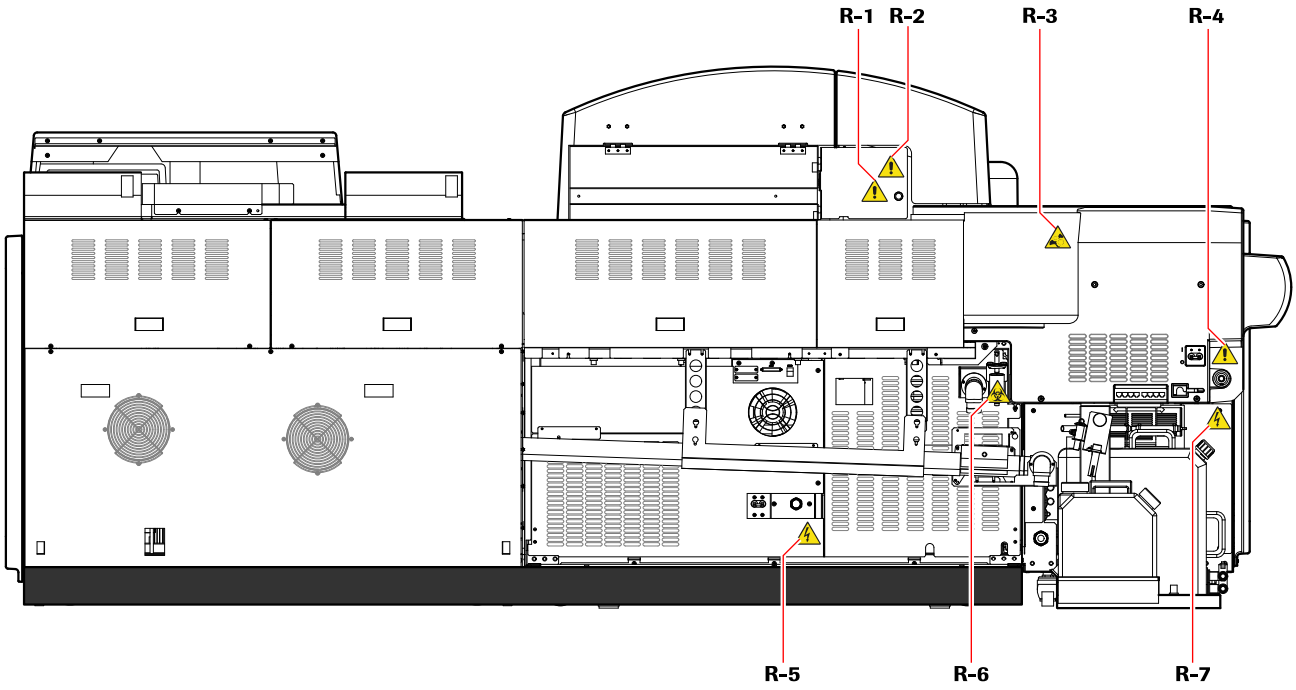

Figure A-4 Rear view of the analyzer

R-1		**Caution against contact with mechanism!**
R-2		**Attention to cover with a key!**
R-3		**Caution against entanglement by rack rotor!**
R-4		**Attention during water filter maintenance!**
R-5		**Attention to electric shock at the back side of the instrument!**
R-6		**Caution against infection due to contact with ISE waste solution!**
R-7		**Attention to electric shock at the lower part of the rack sampler unit!**

Safety information for barcode readers

⚠ WARNING

Loss of sight caused by intense light of barcode readers

The intense light of a laser or LED barcode reader may severely damage your eyes or result in hazardous radiation exposure.

- Do not stare into the beam of a LED barcode reader.
- Do not remove covers from barcode readers.
- Do not perform any maintenance actions on barcode readers. If problems concerning the barcode readers occur, contact your local Roche service representative.

The following figure shows the position of the barcode readers and the directions of the LED apertures used by the **cobas** 6000 analyzer series:

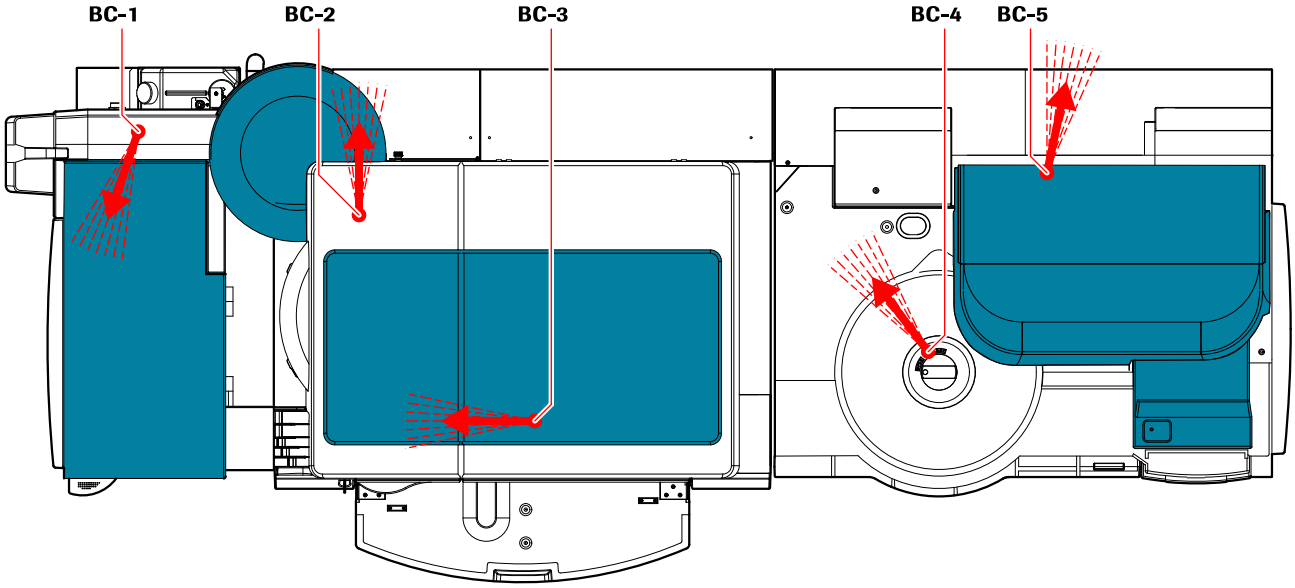

Figure A-5 Top view of the analyzer - localization of barcode readers

The following table gives technical information about the intensity of the barcode readers:

Barcode no.	Module	Barcode reader used for	Maximum LED radiation output power	LED class /Classified standard
BC-1	**cu** 150	Rack ID and sample ID	10 µW	Class 1 LED product
BC-2	**c** 501	Rack ID and sample ID	10 µW	IEC 60825-1, +A2:2001
BC-3		Reagent	10 µW	
BC-4	**e** 601	Reagent	102.92 µW	
BC-5		Rack ID	10 µW	

Table A-1 Barcode readers of the **cobas** 6000 analyzer series

Interlock function

The top cover of the **c** 501 module is equipped with an interlock function to protect the operator from being injured by moving parts. If the top cover of the **c** 501 module is opened, the interlock function cuts the power to and stops all moving parts. An alarm is triggered.

If you want to continue operation or perform a maintenance item, you have to put the instrument back to standby.

To put the instrument back to standby, see *Interlock function: Reset after stop* on page B-239.

A Top cover

Figure A-6 **c** 501 module

Disposal of the instrument

The instrument must be treated as potentially biohazardous waste. Decontamination (that is, a combination of processes, including cleaning, disinfection and/or sterilization) is required before reuse, recycling, or disposal of the instrument.

Dispose of the instrument according to the appropriate local regulations. Before disposing of the instrument, contact your Roche service representative.

Disposal of control unit components

Components of your control unit (such as the computer, monitor, keyboard) that are marked with this symbol are covered by the European Directive on *Waste Electrical and Electronic Equipment* (WEEE, 2002/96/EC).

These items must be disposed of through designated collection facilities appointed by government or local authorities.

For more information about disposal of your old product, please contact your city office, waste disposal service, or your Roche service representative.

Constraint:

It is left to the responsible laboratory organization to determine whether control unit components are contaminated or not. If contaminated, treat in the same way as the instrument.

Overview modules

This chapter provides an overview of all modules of the **cobas** 6000 analyzer series. A description of possible configuration is provided, as well as system specifications and environmental conditions.

In this chapter

Chapter **2**

Overview A-35
Modules of the cobas 6000 analyzer series A-36
Control unit and cobas link A-37
Core unit A-38
c 501 module A-39
Photometric unit A-39
ISE unit A-40
e 601 module A-40
Second rotor module A-41

Overview

The **cobas** 6000 analyzer series is a fully automated, software-controlled system for clinical chemistry and immunoassay analysis. It is designed for both quantitative and qualitative in vitro determinations using a large variety of tests for analysis. It is ready to use 24 hours per day. The **cobas** 6000 analyzer series:

- is fully automated
- is modular
- is computerized
- uses serum/plasma, urine, CSF, supernatant and whole blood sample types
- performs in vitro quantitative and qualitative tests on a wide range of analytes
- performs photometric assays and ion-selective electrode measurements on **c** 501 modules as well as electrochemiluminescence assays on **e** 601 modules

Modules of the cobas 6000 analyzer series

The **cobas** 6000 analyzer series comprises of a control unit, core unit **cu** 150 and the following hardware units, which can be combined in various combinations:

- **c** 501 module
- **e** 601 module

Figure A-7 The **cobas** 6000 analyzer series

The modularity of the system allows for up to seven combinations of the above hardware units and thus provides tailored solutions for all medium workload requirements:

Clinical chemistry	< c > < c c >	Up to 2000 tests/h (photometric and ISE) for a <cc> system Up to 1000 test/h for a single <c> system Up to 60 **cobas c** packs per **c** 501 module
ECL technology	< e > < e e >	Up to 340 tests/h for a <ee> system Up to 170 test/h for a single <e> system Up to 25 **cobas e** packs per **e** 601 module
Hybrid combinations	< c e > < c c e > < c e e >	Up to 2170 tests/h Up to 145 reagent packs

Control unit and cobas link

The control unit uses a graphical user interface to control all instrument functions. The **cobas** link PC is used as the gateway for retrieving and distributing information—such as important notes and test- and lot-specific analyzer settings—from Roche TeleService-Net to **cobas** analyzers.

The following figure shows the control unit together with the **cobas** link PC:

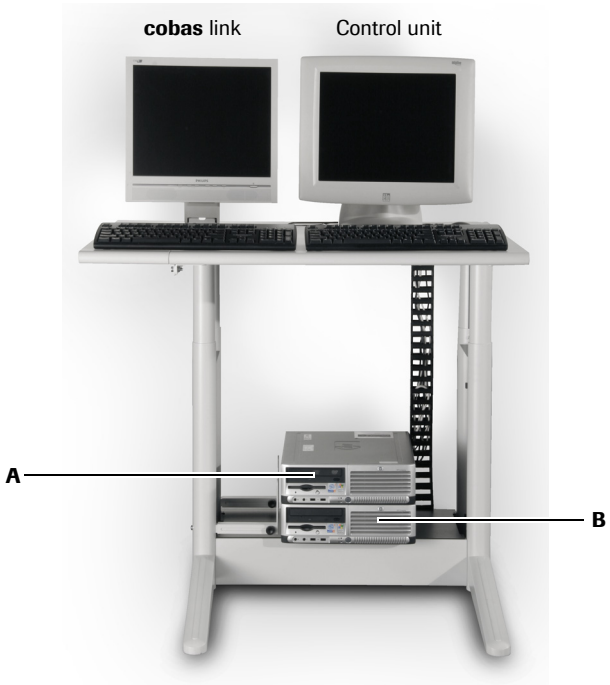

A **cobas** link PC **B** Control unit computer

Figure A-8 Control unit and **cobas** link PC

Any component of the control unit is subject to change without prior notice.

Core unit

The core unit comprises several components that manage the transport of samples to each assigned analytical module.

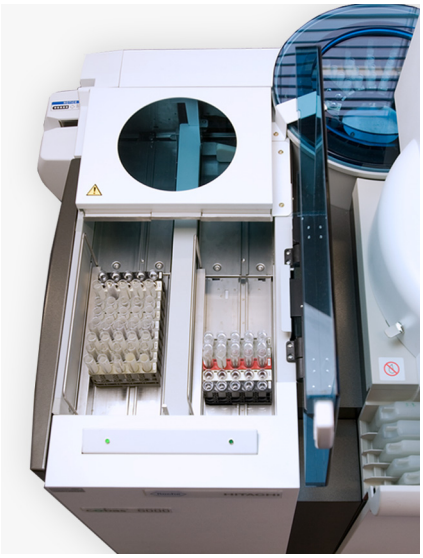

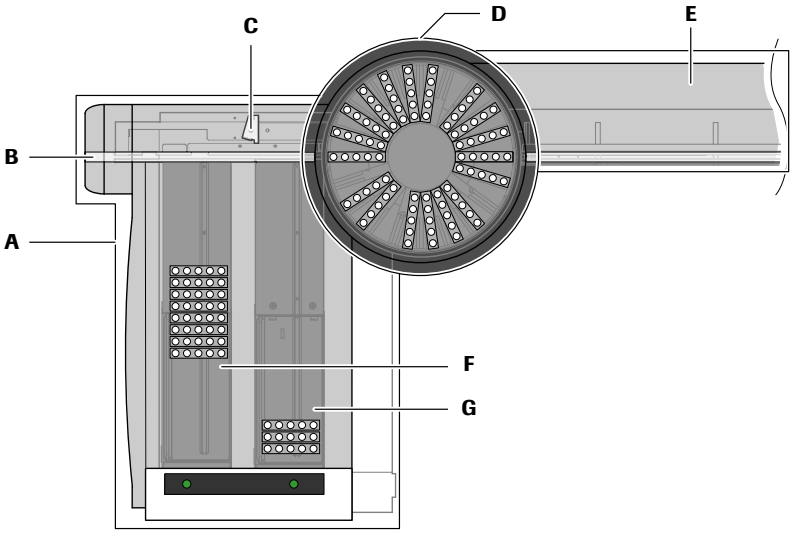

A	Rack sampler unit	**E**	Conveyor line (depending on system configuration)
B	STAT port	**F**	Rack loader
C	Barcode reader	**G**	Rack unloader
D	Rack rotor		

Figure A-9 Core unit **cu** 150

Other core module components (installed into the rack sampler unit) are:

- Water supply
- System interface port
- Power switches
- Main circuit breaker

c 501 module

The **c** 501 module comprises a photometric unit and an ISE unit (for ion-selective electrode [ISE] determinations).

Figure A-10 **c** 501 module

Photometric unit

The photometric unit provides the analyzer with a flexible photometric method of assaying up to 600 in vitro tests per hour on a wide range of analytes. The following are the main components of the **c** 501 module:

- Sampling system
- Reagent system
- Reaction disk system

Sampling system

The sampling system is composed of a sample pipetter (consisting of a pipetter arm and the sample probe), a sample syringe, and a rinse station for internal and external rinsing of the sample probe.

Reagent system

The reagent system is composed of a refrigerated reagent compartment consisting of two storage rings for reagent cassettes, and a reagent pipetting system with two rinse stations for internal and external rinsing of the reagent probes.

Another integral part of the reagent system is the cassette management system, which provides a fully automated management of reagent cassettes—from the point of loading of new cassettes all the way to the disposal of empty cassettes.

Reaction disk system

The reaction disk system is composed of a reaction disk, immersed in an incubator bath, three ultrasonic mixing units, a photometric measuring system, and a cell rinse unit for cleaning the reaction cells once test measurement is complete.

ISE unit

Moreover, the **c** 501 module has an integrated ISE unit, which provides the analyzer with a potentiometric method for assaying sodium, potassium and chloride samples. The ISE unit can process up to 200 samples per hour. The following are the main components of the ISE unit:

- ISE measuring compartment with measuring cartridges for Cl^-, K^+, Na^+ and Reference cartridge
- ISE pipetter
- ISE sipper
- IS bath
- ISE reagent compartment

e 601 module

The **e** 601 module is an immunoassay analyzer with a throughput of up to 170 tests per hour. The **cobas** 6000 analyzer series can be configured with up to two **e** 601 modules.

Figure A-11 **e** 601 module

The following are the main components of the **e** 601 module:

- Reagent area
- Measuring area
- Consumables area
- Pre-wash area

Reagent area The reagent area comprises the left side of the analyzer and consists of a reagent disk, a barcode reader, a cap open/close mechanism, a microbead mixer, a reagent probe and two rinse stations.

Measuring area The measuring area is in the middle of the analyzer and consists of an incubator, a sample probe, two sipper probes, two sipper rinse stations, and the two measuring cells.

Pre-wash area The Pre-wash station, located in the middle at the back of the analytical module, carries out a pre-wash step to remove special contents of serum from the reaction solution before measuring if required by the assay protocol. The Pre-wash station consists of a Pre-wash gripper, Pre-wash sipper, Pre-wash dispenser, rinse station, separation stations, and the vortex mixing station.

Consumables area The consumables area is on the right side of the **e** 601 and consists of the gripper, the mixing station, the AssayTip station, the magazine lifter trays, two solid waste containers, the magazine waste compartment, and the auxiliary reagents and cleaning solutions.

Second rotor module

Only **cobas** 6000 analyzer series with a specific configuration have a second rotor module.

Figure A-12 Second rotor module

The second rotor module routes racks from the core unit to the second and third analyzer modules and back to the first rack rotor. The second rack rotor also acts as rack buffer for the automatic rerun function.

Systems with the following configurations have a second rotor module:

- <c 501> <c 501>
- <c 501> <c 501> <e 601>
- <c 501> <e 601> <e 601>

The second rotor module is always placed between the first and the second analyzer module.

Control unit, cobas link and core unit

This chapter provides a detailed description of the control unit, the **cobas** link platform, and the core unit. The description of the core unit includes the rack sampler unit, the rotor, and the conveyor line, as well as line movements within these components. The sample containers, sample racks, and the rack identification are also described in this chapter.

In this chapter

Chapter **3**

Control unit A-45
Control unit computer A-45
Touchscreen Monitor A-46
Keyboard A-46
Mouse A-46
Printer A-46
cobas link A-47
Overview A-47
Main functions A-49
Working with cobas link functions A-50
Using e-barcodes via download A-50
Using the backup function A-51
Using e-package inserts A-51
Core unit cu 150 ..... A-52
Rack sampler unit A-53
Rack loader/unloader A-54
STAT port A-55
Barcode reader / cup sensor A-55
Power switches A-56
System interface port A-56
Water supply A-57
Rack rotor A-58

Trays, racks, tubes, and cups A-59
Rack trays A-59
Racks A-60
Rack types A-60
Rack number ranges A-61
Rack ID A-61
Rack classes and colors of standard racks A-62
Rack classes and colors of MPA racks A-62
Correct alignment of sample tubes on a rack A-63
Sample containers A-66
Sample tubes and cups A-66
Sample identification A-67
Maximum fill height A-67

Control unit

The control unit uses a graphical user interface to control all instrument functions. The following figure shows the control unit together with the **cobas** link PC:

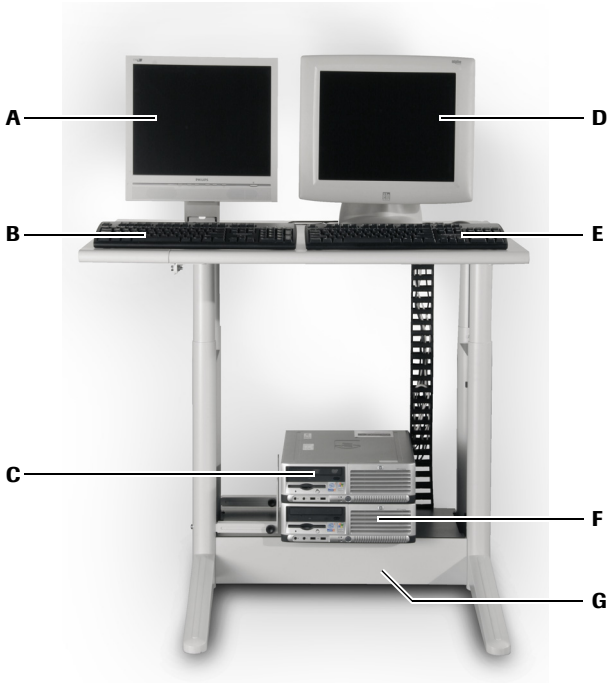

A	Monitor **cobas** link	**D**	Touchscreen Monitor
B	Keyboard/Mouse **cobas** link	**E**	Keyboard/Mouse
C	**cobas** link PC	**F**	Control unit computer
		G	Ergonomic PC stand

Figure A-13 Control unit and **cobas** link PC

Do not place the computer, touchscreen or any data storage media in the vicinity of electric or magnetic fields, since this may led to damage and/or data loss.

Control unit computer

The control unit computer monitors the system functions, and operation modes for all modules.

- A hard disk drive is used to store the operating system, the analyzer software, the Online Help system and data, for example patient data, calibration data, QC data and system parameters.
- A 31/2 inch floppy disk drive is available for reading and writing parameters and other information for backup purposes.
- A CD or a DVD drive is available for loading software updates.

Touchscreen Monitor

The system uses a 17" SVGA with color monitor touchscreen adapter to:

- Display information
- Navigate through the software
- Initiate instrument functions

To use a touchscreen, touch what you want to request or change directly on the screen. Most of the items within the software can be accessed using the touchscreen. Touch the item desired (for example, menu bar, list box, text box, button, etc.) to complete your task. For example, to display the **Data Review** screen in the **Workplace** menu, touch **Workplace**, then the **Data Review** tab.

When touching the screen, be sure to “tap” not “press”. The tap must be of short duration. When touching the screen, you can use your finger or a pointing device.

Selecting Items

To select a consecutive range of items in a list, press <Shift> and touch the first item in the range. While continuing to press <Shift>, touch the last item in the range. All items, including the first and last items touched in the range, are highlighted. You may also touch the first item in the list and drag your finger to the last item in the list.

To select multiple, nonconsecutive items, press <Ctrl>, then touch the desired items.

Keyboard

A 101-key enhanced keyboard is used to navigate through the software and to enter information.

Most items that can be accessed via the touchscreen can also be accessed via the keyboard.

For more information, see *Shortcut Keys* on page B-13.

Mouse

A mouse is available to navigate through the software.

The mouse can be used to select items on the screen and to place the cursor at an insertion point in a text box. To select an item using the mouse, move the mouse over the item and then click.

Printer

The system uses a graphics-capable printer. Patient results can be printed in report format (long) or in monitor format (short). The printer can be ordered as an optional accessory.

See *Report Format* on page B-310.

cobas link

This section explains the principles of the **cobas** link platform and gives an introduction to working with **cobas** link.

Overview

***cobas** link platform*

The **cobas** link platform is the gateway for retrieving and distributing information from the Roche remote service infrastructure to **cobas** analyzers in the laboratory (Figure A-14). Information such as instructions for use, value sheets, important notes, as well as test-specific and lot-specific analyzer settings are made available through **cobas** link

cobas link is an integral and mandatory part of the **cobas** modular platform analyzers.

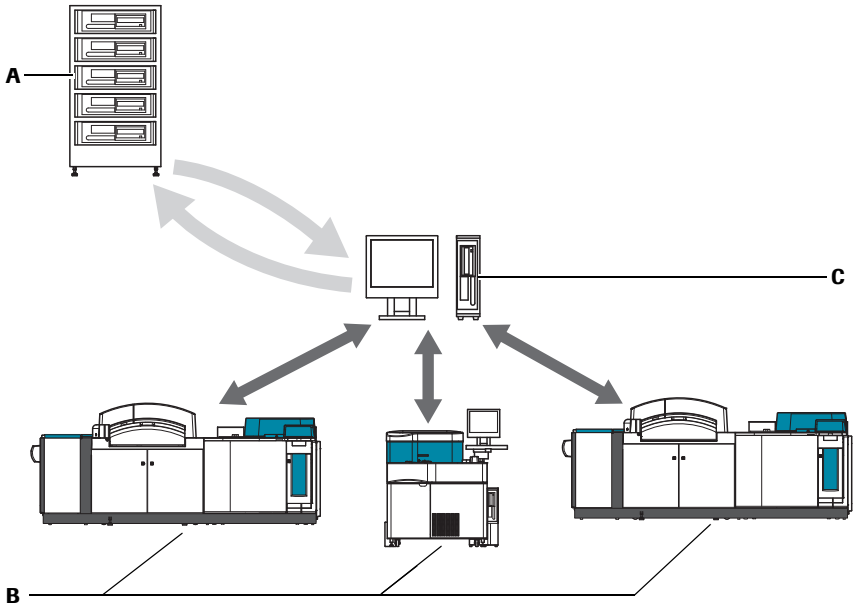

A Remote service infrastructure
B **cobas** analyzers
C **cobas** link PC

Figure A-14 **cobas** link platform

A number of applications and other information, for example about controls and calibrators, are available on the **cobas** link, which automates manual tasks, improving efficiency and reducing errors.

No patient names or patient IDs are transferred to or stored within the remote service infrastructure.

Remote service infrastructure

Remote service infrastructure is the technical infrastructure which provides the **cobas** analyzers and operators with important product information from Roche Diagnostics. Remote service infrastructure offers several applications to manage and display data and information gathered from remotely connected instruments which are uploaded by **cobas** link located in the laboratory systems.

***cobas** link PC*

A dedicated desktop computer consisting of monitor, keyboard, mouse, and printer located in the customer laboratory, which has been configured to act as a gateway between Roche Diagnostics systems and the internet. As well as providing a communication link, the **cobas** link PC also stores data and documentation for assay processing.

***cobas** e-library*

cobas e-library runs on the **cobas** link platform. **cobas** e-library receives data, from the remote service infrastructure, about assay parameters as well as labeling information for the applications, controls, and calibrators used on **cobas** analyzers. This data is then made available to the connected analyzers, ensuring that they always have the current data when it is required. Laboratory staff can also view and print this data, when needed, through **cobas** e-library.

cobas e-library is updated daily by an automatic download if it is connected to a network. New catalogue numbers, calibrator lots, and control lots are displayed by default.

Regular updates

It is important to update **cobas** e-library regularly to ensure you receive all important information as it becomes available.

There is a separate Operator's Manual for the **cobas** e-library available.

For information on working with the **cobas** e-library, refer to the **cobas** e-library Operator's Manual.

If your laboratory does not have an online connection to remote service infrastructure, the **cobas** e-library data is provided on a CD, distributed by your local Roche service representative.

For information on working with CDs, refer to the **cobas** e-library Operator's Manual.

Main functions

From the operator's point of view the main functions of **cobas** link are:

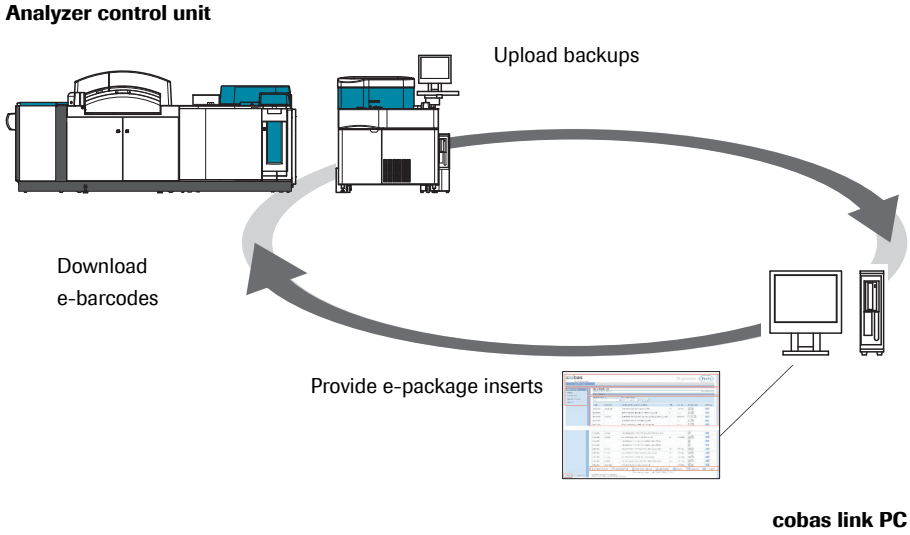

Figure A-15 **cobas** link - main functions

e-package inserts (e-PI)

The **cobas** e-library stores many documents (e-package inserts) which can be viewed, printed, and saved:

- Instructions for use for the applications
- Value sheets of controls and calibrators
- Important notes (for example, reassigned control values)
- Announcements from Roche service representatives (for example, customer letter)

See *Using e-package inserts* on page A-51.

e-barcodes (e-BC)

Providing e-barcodes like application parameters to be downloaded from **cobas** link to the analyzer by the operator. e-BCs are readable by the instrument only.

See *Using e-barcodes via download* on page A-50.

e-reference documents

e-reference documents provide current product information.

Screen sharing

Screen sharing is a function to support the instrument and the user.

Backup function

Providing the possibility of data backup for the **cobas** 6000 analyzer series.

See *Using the backup function* on page A-51.

Working with cobas link functions

This section explains the working principles of the main **cobas** link functions.

Using e-barcodes via download

The operator downloads the required e-barcodes from the **cobas** link PC to the analyzer.

The following types of e-barcodes are available:

- Application data
- Calibrator data
- Control data

The following figure gives an overview of the installation process.

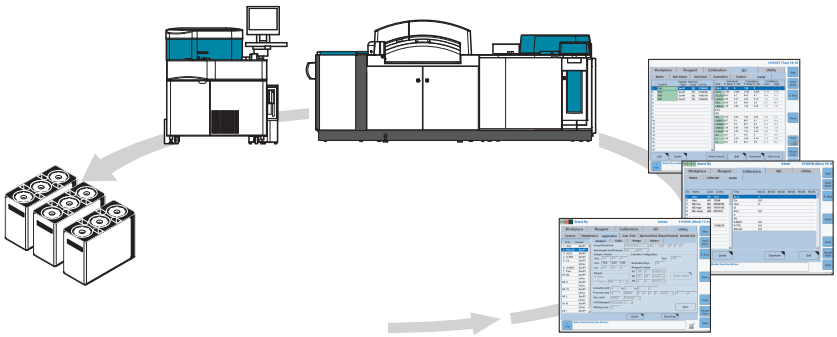

Figure A-16 Installation process of a new **cobas** application

If the data of a particular application (application parameters, calibrator data, and control data) is not available on the analyzer, it has to be downloaded from **cobas** link.

For more information, see *Installing an application* on page B-256.

A detailed description for installing new applications, calibrators, and controls is given in the corresponding chapters.

For a more detailed description see:
To download application parameters from cobas link on page B-259
To download calibrator data from cobas link on page B-190
To download control data from cobas link on page B-226

Using the backup function

Instrument and process related data can be stored on the hard disk of the **cobas** link PC for recovery. In order to initiate this backup function it is necessary to include the **cobas** link upload function (*Smart. Com Essential information upload*) in a maintenance pipe that is carried out daily (for example, as part of the *Power ON* pipe).

This item can only be performed in a maintenance pipe.

For more information, see:
Defining and editing maintenance pipes on page C-11
Recommended maintenance pipes on page C-32
Smart. Com Essential information upload on page C-42

Perform daily backups to preserve the operational availability of the analyzer!

Include the **cobas** link upload function (*Smart. Com Essential information upload*) into a maintenance pipe that is executed daily. If a hard disk error on the control unit occurs, the last backup can be restored from the **cobas** link PC by a Roche service representative.

Using e-package inserts

You can view, print, and save e-package inserts from the **cobas** e-library.

The e-package inserts (e-PI) consists of the following electronic documents:

- Instructions for use
- Value sheets of calibrators and controls
- Important notes (for example, reassigned control values)
- Announcements from Roche service representatives (for example, customer letter)

Check your cobas e-library daily to obtain important information

It is important to check your **cobas** e-library daily (**New Entries**) because important information that is necessary for analysis—like reassigned control values—is announced through the **cobas** e-library.

For information on working with the **cobas** e-library, refer to the **cobas** e-library Operator's Manual.

Core unit cu 150

The core unit comprises several components that manage the conveyance of samples to each assigned analytical module. Therefore, the actual composition depends on the current module configuration of the analyzer. The core unit comprises at least the rack sampler unit and one rack rotor as main components. Conveyor line(s) and second rack rotor are possible extensions.

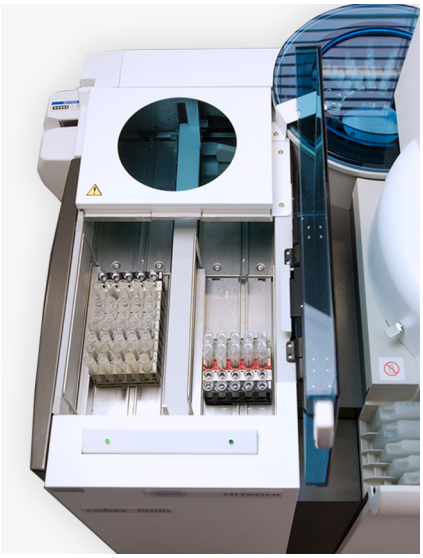

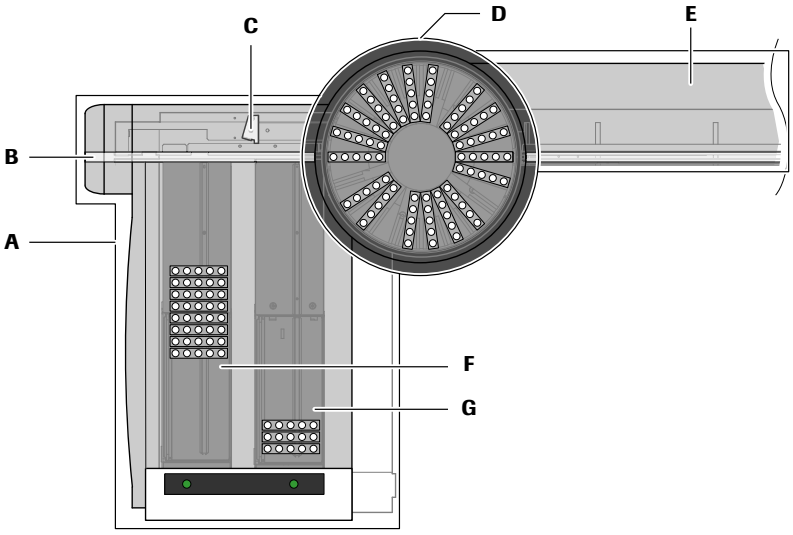

A Rack sampler unit
B STAT port
C Barcode reader
D Rack rotor
E Conveyor line (depending on system configuration)
F Rack loader
G Rack unloader

Figure A-17 Core unit **cu** 150

The following are main components of the core unit:

- Rack sampler unit
- Rack rotor(s)
- (Conveyor line[s])

Other core unit components (installed into the rack sampler unit) are:

- Rack loader/unloader
- STAT port
- Barcode reader (for racks and samples)
- Water supply
- System interface port
- Power switches
- Main circuit breaker

Rack sampler unit

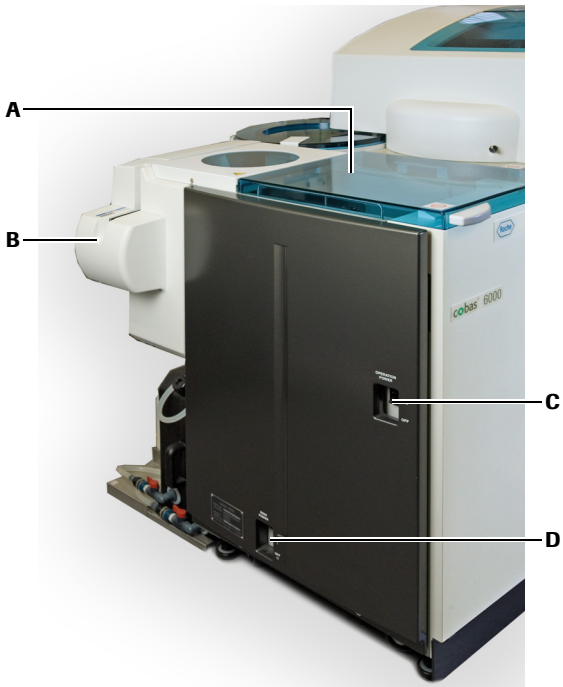

A Rack loader/unloader
B STAT port
C Operation power switch
D Main circuit breaker

Figure A-18 Rack sampler unit

All central control and supply functions of the core unit are installed into the rack sampler unit.

The following subsections describe the rack loader/unloader, STAT port, barcode reader, and power switches. Then, we turn to the rear of the rack sampler unit and discuss the system interface and the water supply.

Rack loader/unloader

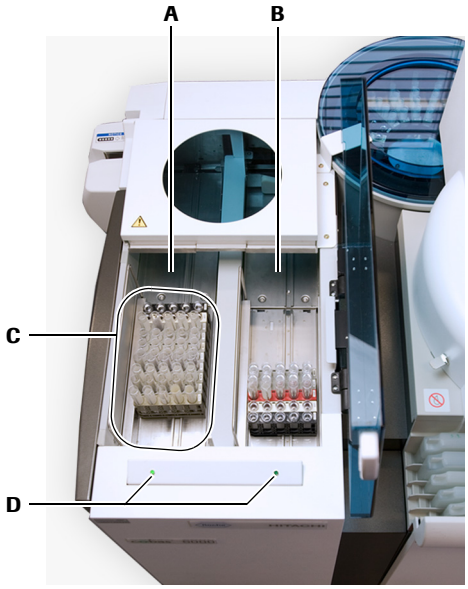

A Rack loader
B Rack unloader
C Rack tray (with racks)
D Green LED

Figure A-19 Rack loader/unloader

Viewed from above, the rack sampler unit features two lanes where sample racks (or rack trays with sample racks) are to be inserted; the left lane is the rack loader, the right lane is the rack unloader. Both the loader and the unloader have a capacity of 150 samples, corresponding to 30 racks each. The racks are supplied on rack trays.

Make sure the rack barcode label is on the right side when placing a rack on a tray. The barcode label can be read only when racks are supplied in correct orientation.

The rack loader is designed for continuous loading. That is, the operator can load new samples while others are still being processed. When the analyzer is in operation, the green LEDs indicate when a rack tray can be exchanged. That is, when new sample racks can be inserted or when a rack tray can be removed from the unloader.

When the analyzer is in operation, rack loading proceeds automatically. When the analyzer is in standby, rack loading initiates after the operator starts the run.

Rack loading

The rack loader automatically pushes the sample racks forward. One after another, the racks are pushed onto a feeder, which transports each rack into the rack rotor. When transporting the racks into the rack rotor, a barcode reader scans the barcode and a sensor checks the height of each sample container. From the rack rotor, the racks move to the analytical module where their samples are analyzed.

After analysis, the racks move from the analytical module via the rack rotor to the unloader. The unloader collects the processed sample racks up to a maximum of 30 racks.

STAT port

Figure A-20 STAT port

Use the STAT port to send any racks directly onto the rack rotor, bypassing all racks on the trays of the rack loader. A rack loaded through the STAT port will be processed with higher priority than other racks in rack rotor.

To locate the STAT port on the rack sampler unit, see Figure A-18 on page A-53.

Make sure the rack barcode label is on the right side when inserting a rack into the STAT port. The barcode label can be read only when racks are supplied in correct orientation.

Any rack can be put into the processing track at any time by using the STAT port. However, when operating in non-barcode mode, routine (gray) racks must not be put into the processing track by using the STAT position! Doing so would disrupt the predefined sample sequence and lead to sample mismatch for all subsequent samples.

For information on the different types of racks, see *Racks* on page A-60.

Barcode reader / cup sensor

When racks are loaded onto the analyzer, either via rack loader or via STAT port, they pass by a barcode reader and a height sensor before they enter the rack rotor. This barcode reader performs the following tasks:

- Scans rack barcode of each rack
- Detects if there is a sample in each of the five rack positions
- Detects the type of sample tube or cup present
- Scans barcodes on each sample within a rack

The height sensor cannot distinguish between sample cups and microcups.

Power switches

There are two types of power switches: Superordinate power switches and power switches for each module.

Superordinate power switches (on the left of the rack sampler unit):

- Operation power switch
- Main circuit breaker

To locate the superordinate power switches, see Figure A-18 on page A-53.

Power switches for each module (at the rear of each module):

- Module power switch for the rack sampler unit
- Module power switch for the **c** 501 module and the **e** 601 module

Power switch	Dependent components
Operation power switch	Whole analyzer except for cooling unit
Main circuit breaker	Whole analyzer including the cooling unit
Module power switch for the rack sampler unit	Rack sampler unit (including rack rotor)
Module power switch for the **c** 501 module and the **e** 601 module	**c** 501 module, **e** 601 module

Table A-2 Power switches and dependent components

System interface port

The following components take part in the data communication within the analyzer and its network environment:

- Rack sampler unit
- Connected analytical modules
- **cobas** link
- Host computer

There are two devices to accomplish the data communication: A serial port for bidirectional communication with the Host computer and a hub for network connections. The hub is located on the PC stand.

For technical information about the serial interface, see *System interface* on page A-117.

Water supply

A Fitting with inlet filter
B System interface port
C Water tank
D Tap for water tank
E High concentration waste container

Figure A-21 Water supply

The deionized water supply system consists of the water tank, located behind the rack sampler unit, connecting tubing, and a series of electronic valves. Water is automatically added to the water tank when necessary. Water from this source is supplied directly to the cell rinse unit, to the rinse stations, and to the incubator bath.

For more information about water consumption and specifications, see *Water requirements* on page A-116.

Rack rotor

Figure A-22 Rack rotor

The rack rotor is located at the rear between the rack sampler unit and the analytical module (**c** 501 or **e** 601, depending on system configuration). The rotor has 20 positions for sample racks. It receives sample racks from the rack loader, passes them on to the **c** 501 module or the conveyor line, receives sample racks from the **c** 501 module after pipetting or from the conveyor line, and passes them on to the unloader.

In addition, the rack rotor can hold special racks (auto QC) readily available and reserve special positions for STAT racks. Any of the 20 positions is freely definable for STAT or auto QC.

If your **cobas** 6000 analyzer is equipped with two **c** 501 modules or with one **c** 501 and two **e** 601 modules, then a module with a second rack rotor is placed between the first and the second analyzer module.

Trays, racks, tubes, and cups

This section describes the different containers and components used to transport samples.

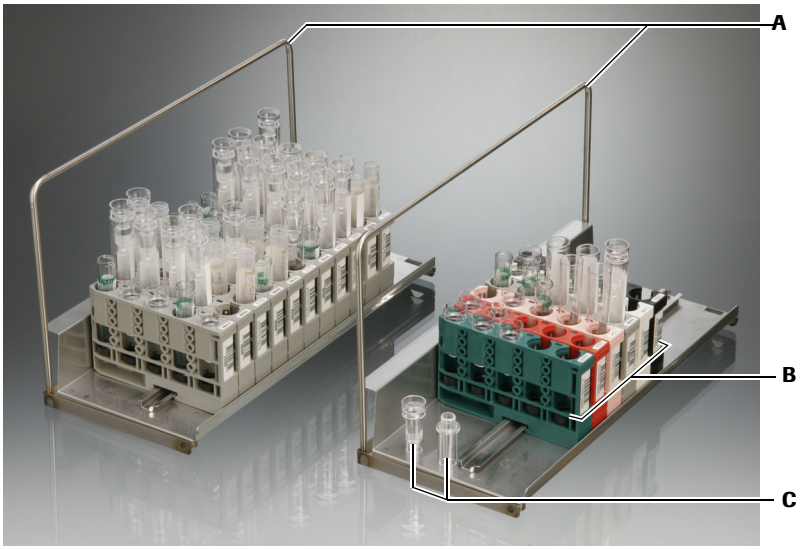

A Rack Trays

B Sample racks with different tubes, cups and cup on tube

C Standard cup, micro cup

Figure A-23 Trays, racks, tubes, and cups

Samples are supplied to the analyzer in sample tubes or cups. These sample containers are inserted in sample racks, which are placed on rack trays.

Rack trays

Rack trays are used to transport sample racks to and from the rack loader/unloader. Each tray has a capacity of 15 racks. This corresponds to a number of 75 samples that can be loaded onto the analyzer with one tray.

Racks

For the **cobas** 6000, different rack types and classes are available. This chapter explains all rack details.

Rack types

For the **cobas** 6000, two rack types are available: Standard racks and MPA racks.

- Standard racks are used as transport carriers for all types of sample containers throughout the **cobas** 6000. You can mix 13 and 16 mm sample tubes on one standard rack.
- MPA racks are used as transport carriers either for 13 mm or 16 mm sample tubes.

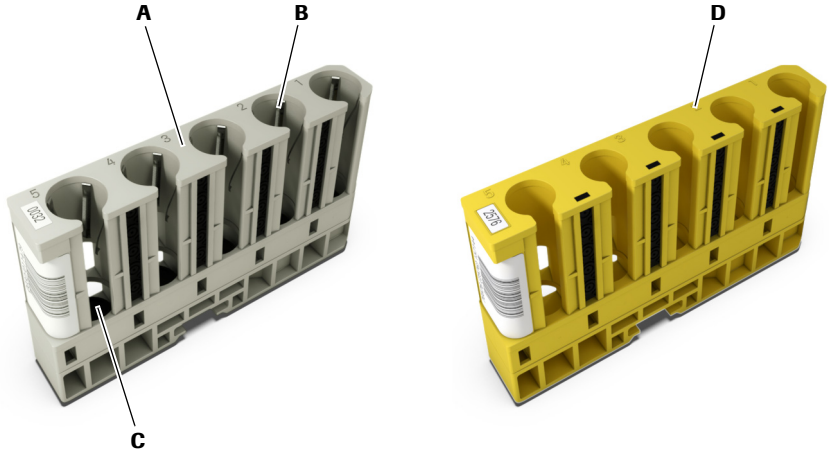

A Standard rack
B Spring clips, allow the use of different tube diameters
C Rubber bottom, ensures the proper orientation for reading of sample barcode
D MPA rack (without spring clips and rubber bottom)

Figure A-24 Comparison of racks

Characteristics	Standard rack	MPA rack
Tube diameter	Flexible, ∅ 13 mm – 16 mm Cup adapters available for tubes with ∅ 13 mm or less	Fixed, ∅ 13 mm or 16 mm
Cup on rack (standard or micro cup)	Can be used	Not supported
Sample classes	All	For routine, STAT, and rerun samples only
Color of routine rack	Gray	Different colors and rack ranges available for different sample types

Table A-3 Rack types and characteristics

For more information, see:
Rack classes and colors of standard racks on page A-62
Rack classes and colors of MPA racks on page A-62

Rack number ranges

Different sample types, such as Ser/Pl or urine, can be processed on the analyzer. To process these different sample types on the different rack types (routine, rerun, STAT), rack number ranges must be defined for each sample type and rack type.

As an example, some number ranges are presented below:

- Serum: Rack number range 001–100
- Urine: Rack number range 401–500

Rack ID

Each rack is equipped with an identification number. This unique number is called rack ID.

Every rack is identified and registered when its barcode ID is scanned by the barcode reader of the core unit.

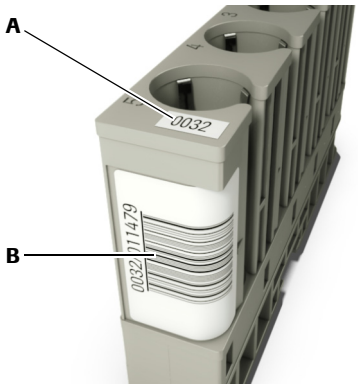

A Rack ID – operator readable

B Barcoded rack ID – system readable (displayed in user interface)

Figure A-25 Rack ID positions

The rack labels displayed in the software differ from those printed on the racks.

Rack classes and colors of standard racks

Racks are available in different colors which are allocated to individual sample classes. This simplifies the handling of sample classes.

The table below provides an overview of rack classes.

Rack class	Rack color	Display in software	Rack ID on label
Routine	Gray	N00001-N03999	0001-3999
STAT	Red	E00001-E00999	S001–S999
Rerun	Pink	R00001-R00999	R001–R999
	Note: Pink racks are only used for manual reruns in non-barcode mode!		
Calibrator	Black	S00001-S00999	C001–C999
QC	White	C00001-C00999	Q001–Q999
Wash rack	Green	W00999	W999

Table A-4 Rack classes and colors of standard racks

Rack classes and colors of MPA racks

MPA racks for routine samples are available in different colors. This allows the use of racks in different colors for each sample type, such as Ser/Pl or urine, according to the rack ranges defined under **Utility** > **System** > **Rack Assignment**.

Overlapping of the rack ranges

The MPA racks share part of the same rack range with the standard racks. Therefore, only one type can be used within the same rack range, either MPA or standard racks.

If you load a rack into the instrument and another rack with the same rack ID is already being processed, the samples on the second rack will not be processed.

The table below provides an overview of MPA racks:

Rack class	Rack color		Display in software	Rack ID on label
Routine **13 mm**	Navy blue Light green Yellow Brown		60001–90000[(a)]	1001–4000[(a)]
STAT **13 mm**	Navy blue		S4501–S4600	S501–S600
Routine **16 mm**	Light blue Light green Yellow		60001–90000[(a)]	1001–4000[(a)]
STAT **16 mm**	Navy blue		S4801–S4900	S801–S900

Table A-5 MPA racks for 13 mm and 16 mm sample tubes

(a) Each color has its specific ID range.

The racks for 13 and 16 mm tubes use different colors and rack ranges, so that you can also distinguish between them.

Please contact your local Roche Diagnostics sales representative for a detailed ordering list for MPA racks.

Correct alignment of sample tubes on a rack

Take special care to place sample tubes correctly on the rack. This is especially important for 13 mm tubes which are narrower and more likely to tilt if placed incorrectly. If the tubes are not correctly seated in an upright position on the rack, the sample probe may attempt to sample outside the tube. Or the sample probe may hit the side of the tube, causing errors and incorrect results.

⚠ CAUTION

Incorrect results when sample tubes are not aligned vertically

Incorrect placement of sample tubes in racks may cause incorrect sample pipetting, which may lead to false low results, especially when testing immunoassays.

- Ensure that sample tubes are always placed vertically in the racks.
- For sample tubes with an outer diameter of 13 mm or less, use the Roche Diagnostics cup adapter or use 13 mm MPA racks alternatively.

See *Sample tube alignment* on page A-64.

- Only use sample tubes specified for the use with the **cobas** 6000 analyzer series.

See *Sample cups and tubes* on page A-120.

Sample tube alignment

The following figure illustrates correct and incorrect alignment of a sample tube on the rack.

The tube position must be straight vertically for correct sampling. The vertical position also reduces possible barcode reading problems.

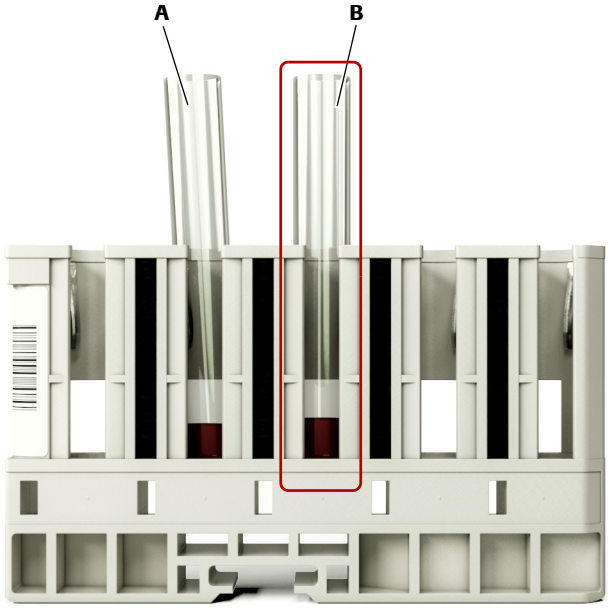

A Incorrect - position misaligned **B** Correct - position perfect aligned

Figure A-26 Sample tube alignment

Cup adapters for tubes ≤ 13 mm

To improve the alignment of tubes with an outer diameter ≤ 13 mm, Roche Diagnostics strongly recommends that Roche Diagnostics cup adapters are used.

Cup adapters are inserted into standard racks as shown in the following figure.

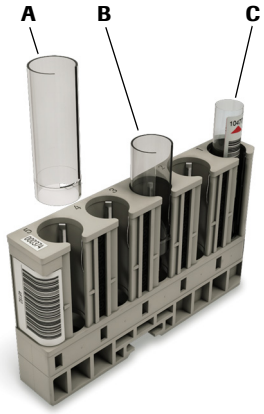

A Roche Diagnostics cup adapter
B Insert adapter into rack
C 13 mm tube placed in a rack position with cup adapter

Figure A-27 Placing a cup adapter into a rack

If immunoassays are requested, cup adapters must be used for sample tubes with an outer diameter ≤ 13 mm.

Do not use cup adapters for tubes with an outer diameter > 13 mm, because the barcode label might be damaged.

For MPA racks, the cup adapters cannot be used.

Conditions for 13 mm tubes without cup adapters

You can omit the cup adapters for 13 mm sample tubes if the following preconditions are fulfilled:

- The **cobas** 6000 is connected with a **cobas**© 8100 automated workflow series. In this clinical laboratory automation system, a gripper arm places the sample tubes into the racks.
- The sample probes are precisely adjusted in horizontal and vertical direction on all modules. The adjustment must be performed by your Roche Service representative.
- All spring clips are symmetrically bent in the used racks so that the sample tubes are held vertically.

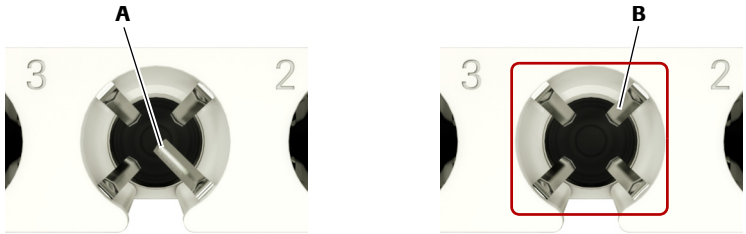

A Incorrect - spring clips are not symmetric **B** Correct - spring clips are symmetric

Table A-6 Spring clips in racks

Sample containers

There are three general kinds of sample containers: Sample tubes, sample cups, and calibrator or control vials.

Sample tubes and cups

Sample tubes are 13 mm or 16 mm in diameter and 75 mm or 100 mm in length. Sample cups (both standard and micro cups) can be inserted into 16-millimeter sample tubes (*cup on tube*) or they can be used without tubes.

For sample container specifications, see *Sample cups and tubes* on page A-120.

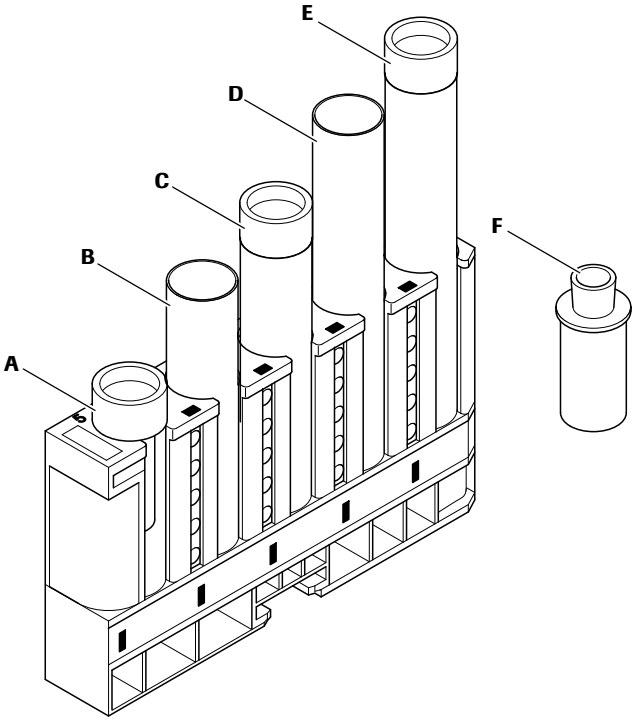

A	Sample cup on rack	**D**	16 mm x 100 mm tube
B	16 mm x 75 mm tube	**E**	Sample cup on 16 mm x 100 mm tube
C	Sample cup on 16 mm x 75 mm tube	**F**	Micro cup

Figure A-28 Sample container heights

Restrictions for the use of micro cups

When the end of sample probe touches the inner wall of a micro cup this may result in improper sample aspiration.

- Do not use micro cups on **e** 601 modules.
- Do not use micro cups for calibrators and controls.

Non-standard tubes

Sample tubes with the following dimensions can also be used:

- Length between 73 mm and 102 mm
- Outer diameter between 12 mm and 16 mm

Non-standard tubes and false bottom tubes can be used for patient samples and controls.

Please contact your Roche service representative for more information about the use of non-standard tubes and other sample containers.

Sample identification

When operating in barcode mode, each sample's barcode label is scanned by the barcode reader of the rack sampler unit. The sample barcode label provides the sample ID, which is used for sample identification and test selection purposes.

For label dimensions and placement specifications, see *Barcode types* on page A-118.

The combination of the sample ID and the rack identification number provides tracking for the system. To track samples by means of the software, select **Sample Tracking** from the **System Overview** screen.

When operating in non-barcode mode, samples are identified by a sequence number, the rack number, and their position in the sample rack. This assignment has to be done on the **Workplace** > **Test Selection** screen.

Maximum fill height

To prevent any splashing during processing of sample containers, the maximum fill height should not exceed 10 mm below the top edge of each container.

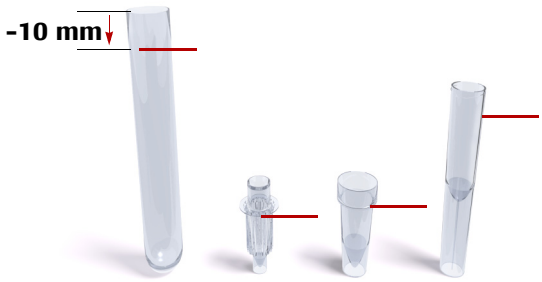

Figure A-29 Maximum fill height for containers

WARNING

Infection and danger by spilled sample during operation

The sample containers may vibrate during rack transport. Sample may be spilled on the transport mechanisms.

- Avoid overfilling sample tubes and cups.
- Only use specified sample tubes and cups.
- Leave approximately 10 mm clearance between the liquid and the top of the sample tube or cup.
- If sample is spilled on the instrument, wipe it up immediately and apply disinfectant. Be sure to wear protective equipment.

c 501 module

This chapter provides a detailed description of the **c** 501 module, its hardware components and technical specifications.

In this chapter

Chapter **4**

Overview A-71
System characteristics A-71
Components of the c 501 module A-72
Sampling area components A-74
Sample pipetter A-74
Sample probe rinse station A-75
Sample syringe A-75
Reagent area components A-76
Reagent storage compartment A-76
Reagent pipetting system A-77
Reagent pipetters A-77
Reagent syringes A-78
Reagent probe rinse stations A-78
Cassette management system A-79
Cassette loading port A-79
Cassette preparation station A-80
Piercer and Gripper A-80
Cassette disposal A-80
Reaction disk area components A-81
Reaction disk A-82
Ultrasonic mixers A-82
Incubator bath A-82
Photometer A-83
Cell rinse unit A-84
Flow of photometric analysis A-86
Main functions on the reaction disk area A-86
Main steps of photometric analysis A-87
Reaction monitoring A-89

Behind the front doors A-90
Auxiliary reagents and cleaning solutions A-91
Vacuum system A-91
Rear view A-92
ISE area components A-93
ISE pipetting system A-94
Internal standard bath A-94
ISE sipper mechanism A-94
ISE measuring system A-95
ISE rinse station A-95
ISE reagent compartment A-95
Flow of an ISE analysis A-96

Overview

The **c** 501 module is a fully automated, discreet, computerized analyzer for in vitro tests on a wide range of analytes. It is designed to use serum/plasma, urine, CSF, supernatant and whole blood sample types. The **c** 501 module performs photometric assays as well as ion-selective electrode (ISE) determinations. The throughput is up to 1000 tests per hour for a combination of photometric and ISE tests.

Figure A-30 **c** 501 module

This chapter describes the **c** 501 module. The rack rotor and rack sampler unit belong to the core unit.

For a detailed description of the core unit, see Chapter 3 *Control unit, cobas link and core unit*.

System characteristics

- 131 on board pre-programmable applications
- STAT sample processing within less than 2 min.
- Automatic reagent cassette loading and unloading
- Automated maintenance functions
- Automatic rerun capability
- Automatic calibration notification
- Automatic sample dilution capabilities
- Non-contact ultrasonic mixing
- Reduced water consumption
- HbA1c whole blood support
- Backup solution for core unit

Components of the c 501 module

The **c** 501 module contains an ISE unit and a photometric unit. Figure A-31 sketches the different areas from a top-view perspective:

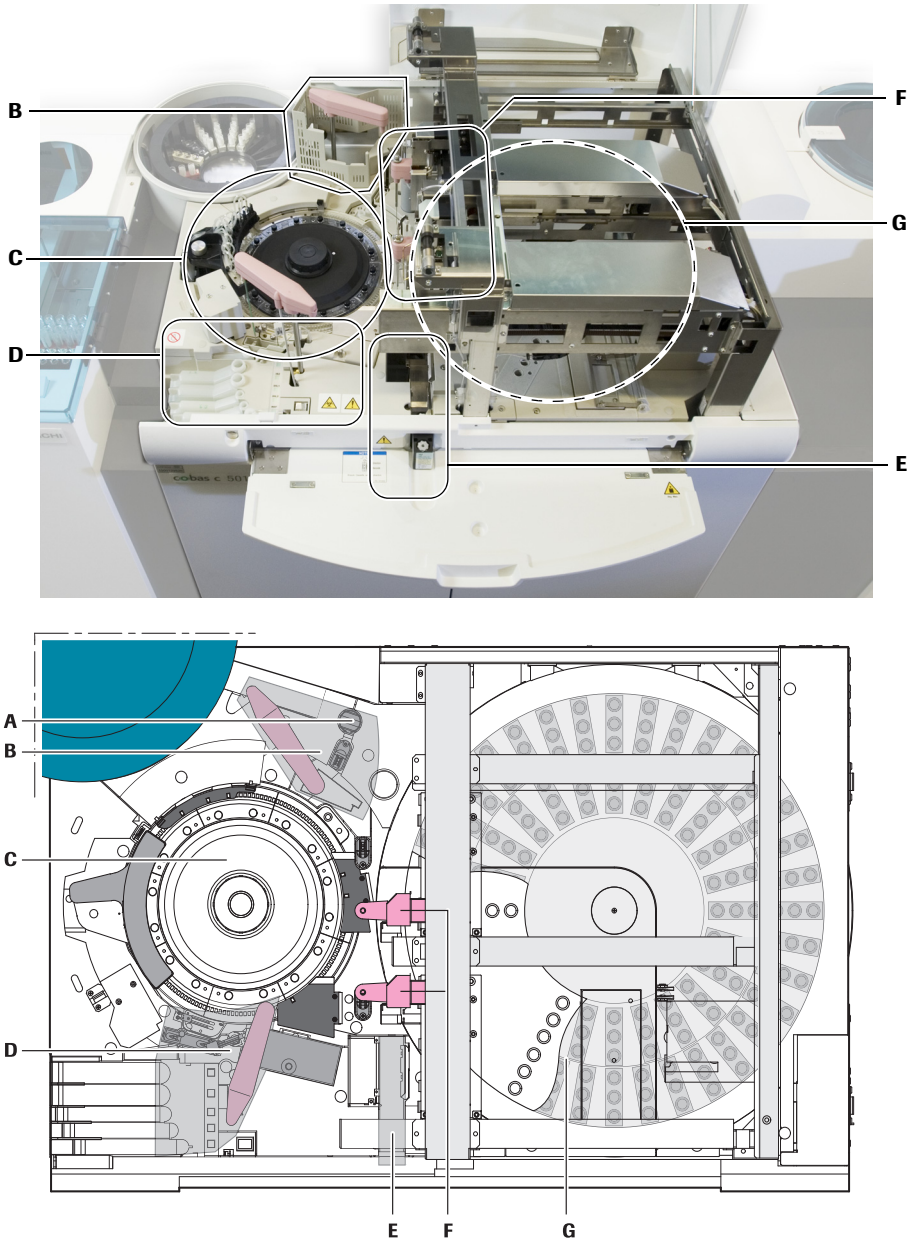

A Rack sampling position
B Sampling area
C Reaction disk area
D ISE area
E Reagent cassette loading port
F Reagent pipetters (pipetting area)
G Reagent area

Figure A-31 Areas of the **c** 501 module

The **c** 501 module can be subdivided into the following areas:

- Sampling area
  See *Sampling area components* on page A-74.
- Reagent area
  See *Reagent area components* on page A-76.
- Reaction disk area
  See *Reaction disk area components* on page A-81.
- Behind the front doors
  See *Behind the front doors* on page A-90.
- Rear side
  See *Rear view* on page A-92.
- ISE area
  See *ISE area components* on page A-93.

Sampling area components

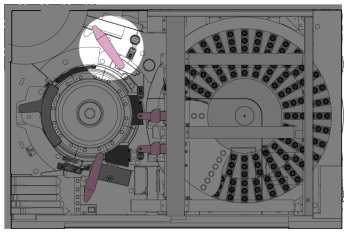

The sampling area of the **c** 501 module consists of the following components:

- A rack sampling position.
- A sample pipetter (consisting of pipetter arm and probe) for pipetting samples from the sample tubes to the reaction cells on the reaction disk.
- A rinse station for internal and external rinsing of the sample probe.

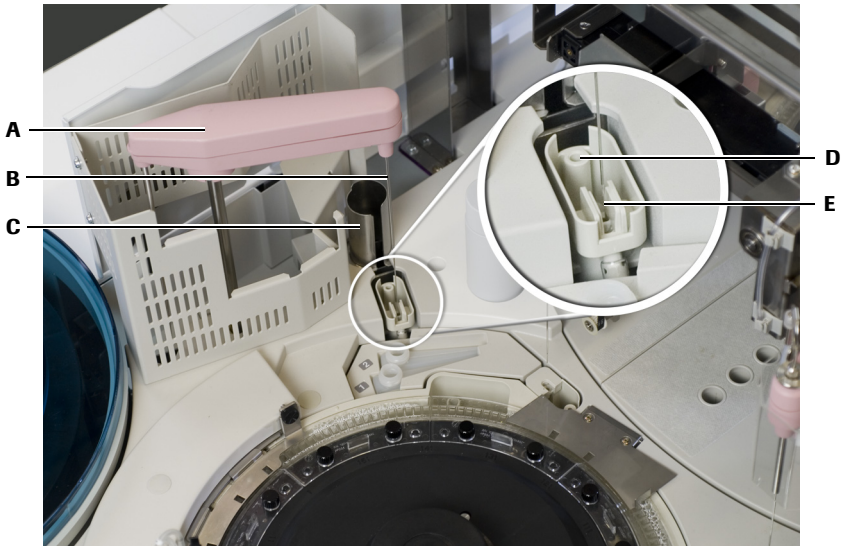

A Pipetter arm
B Sample probe
C Shield pipe (against electrostatic noise)
D Drying cylinder (whole blood applications)
E Sample probe rinse station

Figure A-32 Sample pipetting system

Sample pipetter

The sample pipetter consists of the pipetter arm and the sample probe. When a rack is in the sampling position, the pipetter transports sample liquid from the sample tube to a reaction cell. When aspirating, liquid level detection is accomplished by a highly sensitive capacitance measurement, as well as clot detection by means of pressure measurements.

To protect the probe against electrostatic noise, which would interfere with the capacitance measurement, a metal shield pipe is mounted over the sampling position.

The sample probe is equipped with an extra sensitive level detection and clot detection. That is, it is not identical in construction and therefore not exchangeable with the ISE pipetter probe.

After sample has been aspirated, the probe is raised from the sample and is moved to the reaction disk. The sample probe arm lowers the probe into the reaction cell at the sample dispense position. Sample is dispensed while the beveled sample probe tip is in contact with the bottom of the reaction cell. This ensures that a precise volume of sample is deposited into the bottom of the cell even when using a low dispense volume. The sample probe is spring-mounted on the arm to avoid damage to the probe or reaction cell.

Sample probe rinse station

The sample probe rinse station is located between the sample aspiration position at the sample tubes in the sample racks and the sample dispense position at the reaction disk. To prevent carryover, the sample probe is rinsed here with deionized water both externally and internally before aspirating from a new sample.

The sample probe stops at the drying cylinder only when whole blood is pipetted for HbA1c tests.

The rinse station is the home position for the sample probe when the pipetter is in standby.

Sample syringe

The sample pipetter is connected by tubing to the sample syringe, which controls the pipetting action.

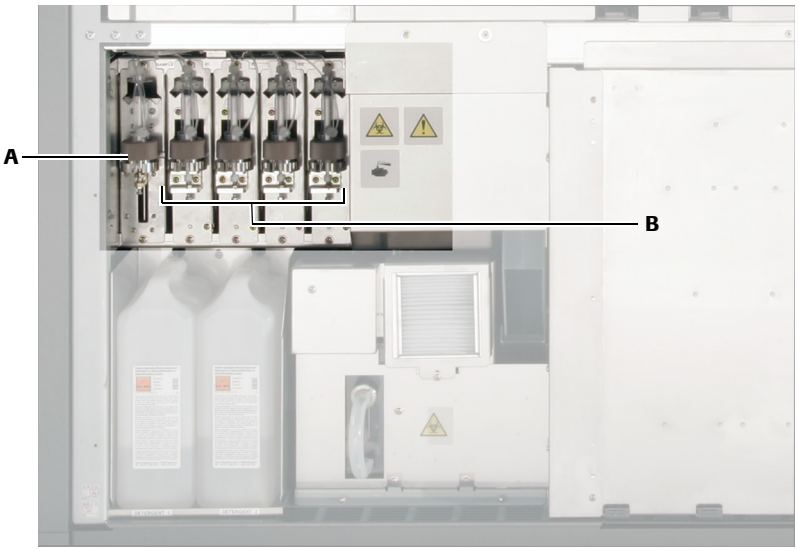

A Sample syringe **B** Reagent syringes

Figure A-33 Sample syringe

The sampling syringe, which is located behind the left front door of the module, is filled with degassed and deionized water. The syringe uses positive displacement to aspirate and dispense samples via the sample probes.

The syringe motor retracts the plunger within the chamber of the syringe, and sample is aspirated into the tip of the sample probe. The pipetter arm moves the sample probe to the reaction disk. The sample probe lowers into the reaction cell and the syringe motor reverses to dispense the sample. The pipetter arm lifts the sample probe from the reaction cell and moves it to the sample probe rinse station.

Reagent area components

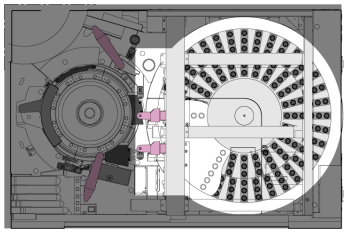

The reagent area of the **c** 501 module consists of the following components:

- A refrigerated reagent compartment for storing up to 60 reagent cassettes.
- Two reagent pipetters for aspirating and dispensing reagents from the reagent compartment to the reaction cells on the reaction disk.
- Two rinse stations for internal and external rinsing of the reagent probes.
- A fully automated cassette management system

Reagent storage compartment

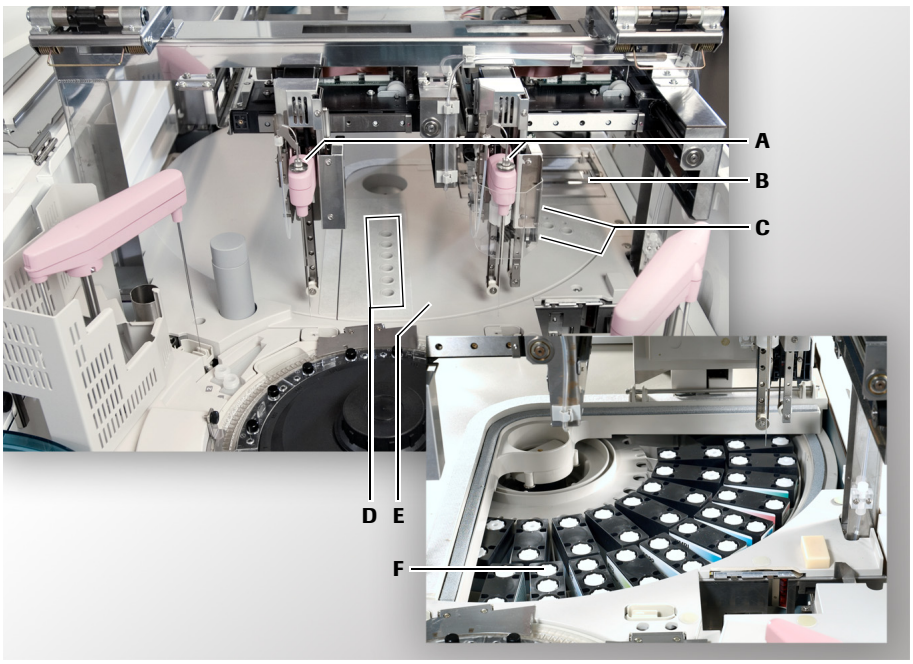

A Reagent pipetters
B Shutter
C Cutouts for R1 reagent pipetter probe
D Cutouts for R2 reagent pipetter probe
E Reagent compartment (cover closed)
F Reagent compartment (cover opened)

Figure A-34 Reagent storage compartment

Reagent cassettes are stored in a closed, temperature-controlled (5-12°C) compartment containing two concentric rings with a total of 60 positions for reagent cassettes. There are 24 positions on the inner and 36 positions on the outer ring.

To prevent reagents from evaporating, the reagent compartment is equipped with a cover. By design, this cover is not meant to be opened or removed. Cassettes are placed into and removed from the compartment by way of the shutter and cutouts in the cover allow reagent probes to access the reagents.

Reagent pipetting system

The reagent pipetting system is composed of two reagent pipetters—R1 and R2—and two reagent syringes. The pipetters are mounted on two independent x-y-motion mechanisms.

Reagent pipetters

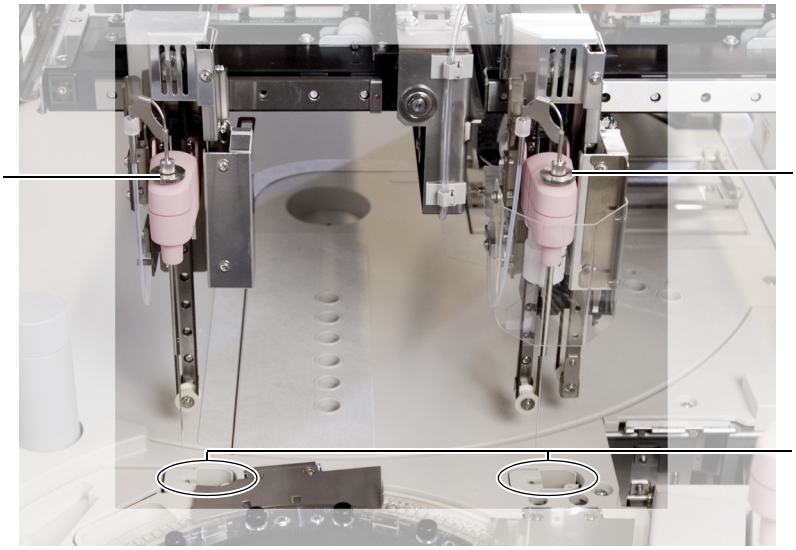

A R2 pipetter
B R1 pipetter
C Rinse stations

Figure A-35 Reagent pipetters

Two reagent pipetters, which are mounted above the reagent disk, transport the reagents from the reagent compartment to the reaction disk.

Before each pipetting, the reagent probes are externally and internally rinsed with deionized water and dried. After reagent has been aspirated, the probe moves from the reagent compartment to the reaction disk. There, the reagent volume is dispensed into a reaction cell containing the sample. Unlike the sample probe, the reagent probes are not lowered into the reaction cell. Reagent is dispensed from the top of the reaction cell.

The mechanical cycle of the **c** 501 module allows for three different reagent timings: R1, R2, and R3. The R1 pipetter pipettes reagents at R1 timing. The R2 pipetter pipettes reagents at R2 and R3 timing.

In contrast to R2, the R1 reagent probe is equipped with a pressure sensor to detect the reagent fill level of manually filled **cobas c** packs at the preparation station. Ready to use prefilled **cobas c** packs are not checked. The gripper and the piercer are mounted on the same x-y-motion mechanism as the R1 reagent probe.

See *Cassette preparation station* on page A-80.

Reagent syringes

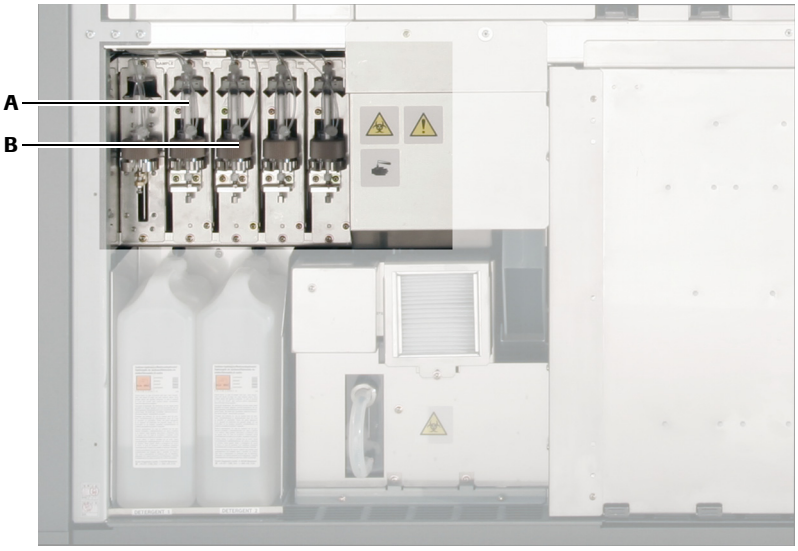

A R1 syringe **B** R2 syringe

Figure A-36 Reagent syringes

The reagent syringes are located behind the left front door of the module. They are filled with degassed and deionized water, using positive displacement to aspirate and dispense reagents.

Reagent probe rinse stations

The reagent probe rinse stations are located between the reagent compartment and the reaction disk. After each reagent dispense, water is flushed through the probes and onto their outside surfaces. The probes are then dried at a drying cylinder.

The rinse stations are the home position for the reagent probes when the module is in standby.

Cassette management system

Reagents for all Roche Diagnostics applications are provided in reagent cassettes. These cassettes contain one to three specially designed reagent bottles and carry barcode labels with detailed reagent and test related information.

From the time of check-in until an empty cassette is discharged the **c** 501 manages the registration, internal transportation, and placement fully automatically. This rules out any possibility of misplacement or usage of inappropriate reagents. The cassette management system consists of the following components:

- Cassette loading port
- Cassette preparation station
- Piercer and Gripper
- Cassette disposal

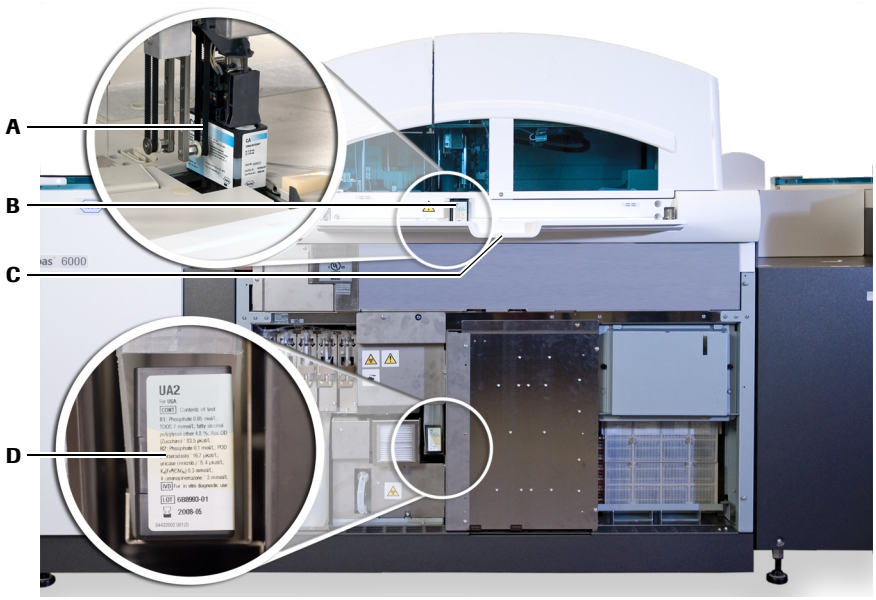

A Cassette preparation station
B Cassette loading port
C Cassette table
D Cassette disposal

Figure A-37 Components of the cassette management system

Cassette loading port

The cassette loading port is located behind the reagent cassette table at the front of the **c** 501 module. It is used for loading reagent cassettes onto the module.

When loading a reagent cassette, it is important that its **barcode label is facing to the right**.

After loading, the system handles the cassette without any further intervention of the operator: The cassette is pulled in to the preparation station where a barcode reader scans the cassette's barcode label and checks its integrity.

A cassette is rejected and not loaded but pushed out of the loading port again in the following cases:

- The cassette's barcode is unreadable
- The cassette has been on the analyzer before and it was previously dumped (discarded) by the system

Cassette preparation station

The cassette preparation station is located directly behind the cassette loading port. When a new cassette is pulled in to the preparation station, a barcode reader scans the following data from the cassette's barcode label:

- System-ID (for example, 07-3755-0)
- Lot number
- Production date
- Cassette number (serial number, for example, 01983)
- Expiration date
- Bottle configuration information

In case, the current cassette has been registered before, the shutter of the reagent compartment opens and the gripper loads the cassette.

If the current cassette is new, the system proceeds with the following actions while the cassette is at the preparation station:

- By reading the cassette barcode, the system checks the availability of the corresponding test application.
- The piercer pierces the reagent bottle caps.

  Now, the cassette is ready to be transported to the reagent compartment by the gripper.

Piercer and Gripper

The piercer and gripper are mounted—together with the R1 pipetter—on an x-y-z motion mechanism. When a cassette is ready to be transported to the reagent compartment, the gripper lowers down on the cassette, grips it, lifts it, and moves it to the shutter. The shutter automatically opens and the cassette is placed in a registered position in the reagent compartment.

Cassette disposal

Empty reagent cassettes are automatically transported to the cassette disposal. With the aid of gravity, the cassettes drop down the cassette disposal shaft at the end of which they can be removed by the operator. The cassette disposal has a capacity of 10 cassettes.

To locate the cassette disposal, see Figure A-37 on page A-79.

Reaction disk area components

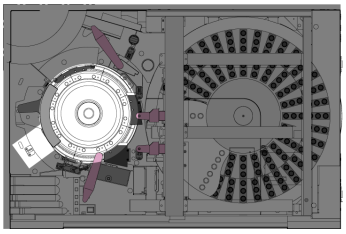

The reaction disk area of the **c** 501 module consists of the following components:

- A reaction disk with the reaction cells, which are immersed in the incubator bath.
- Three ultrasonic mixing units for non-contact mixing of reaction mixtures (15 levels).
- A photometric measuring system which continually measures the absorbance of the reaction mixture in each of the reaction cells.
- A cell rinse unit for cleaning the reaction cells once test measurement is complete.
- The auxiliary reagents Sample Cleaner 2 (acid wash), Sample Cleaner 1 (basic wash), and EcoTergent.

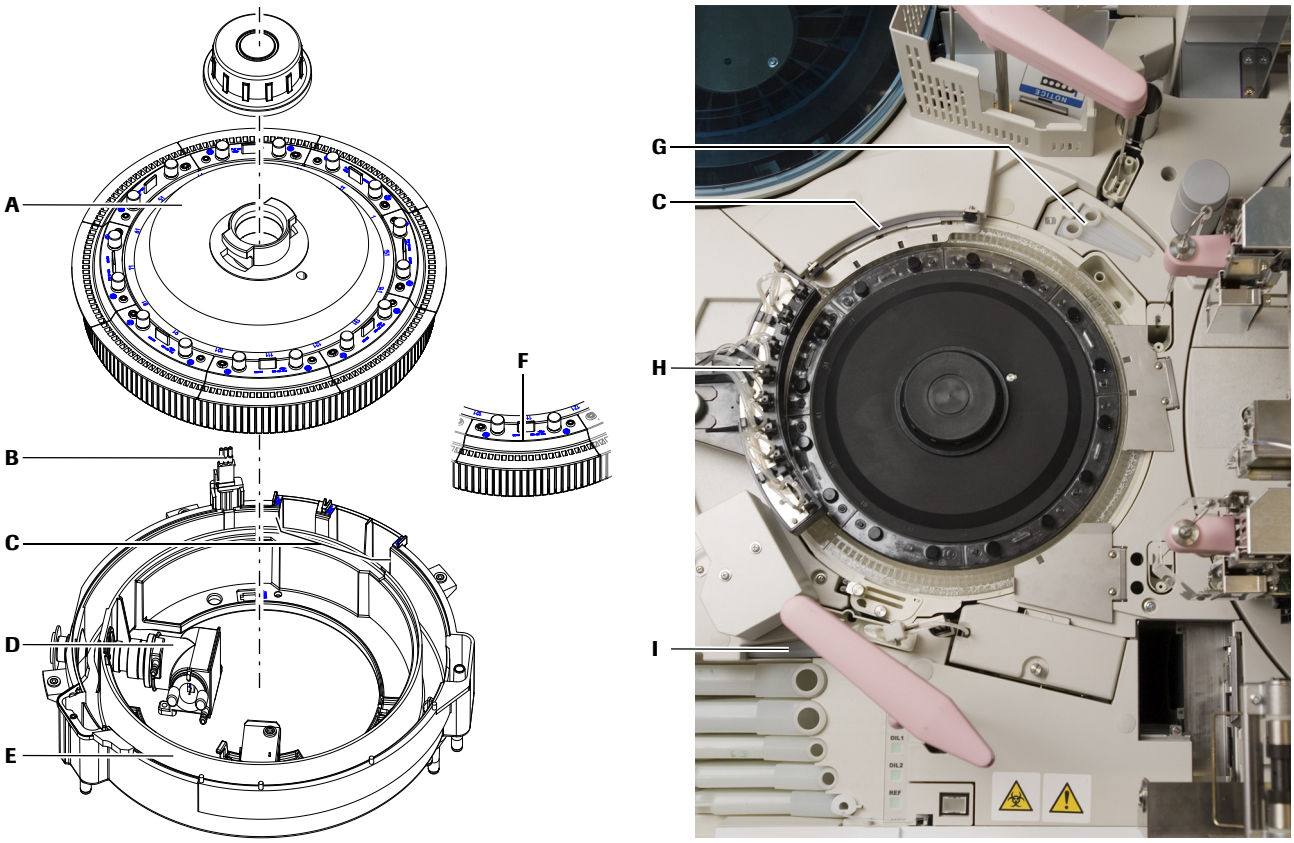

A Reaction disk
B Water level sensor
C Ultrasonic mixing units
D Photometric unit
E Incubator bath
F Reaction cell segment
G (1) Sample Cleaner 1 (basic wash)
(2) Sample Cleaner 2 (acid wash)
H Reaction cell rinse unit
I EcoTergent

Figure A-38 Reaction disk area

Reaction disk

The reaction disk of the **c** 501 module carries 160 reusable plastic reaction cells (cuvettes). These reaction cells are grouped together in eight segments with 20 cells each. All reaction cells are placed in a temperature-controlled bath. This incubator bath maintains the cells at the required temperature of 37°C.

The reaction cells should be replaced once a month since they gradually deteriorate over time. Carry out cell blank measurement once a week after rinsing the reaction system to check the integrity of all cells.

For more information, see:
To perform a cell blank measurement on page C-82
Replacing reaction cells on page C-90

Ultrasonic mixers

The ultrasonic mixing units mix the reagents within each of the reaction cells to ensure a homogeneous distribution of reactants. Corresponding to the three reagent timings R1, R2, and R3, there are three independent mixing units.

To avoid spillage, the water level of the incubator bath is checked before mixing by calculating the volume. If the liquid level is too low or too high, an alarm (Mix.E) is issued and mixing is not performed.

Contamination on the surface of the ultrasonic mixing units causes inadequate mixing. It should be cleaned at least once every three months. The ultrasonic output intensity is continually monitored. If the intensity falls below a certain limit, an alarm (<Mix) is issued, and replacement of the ultrasonic mixing unit is required. Contact your Roche service representative for the replacement.

See *Cleaning the ultrasonic mixers* on page C-102.

Incubator bath

The circular incubator bath, positioned beneath the reaction disk, maintains the reaction mixtures in the reaction cells at a temperature of 37°C. Water in the incubator bath is circulated by a pump through a refrigeration unit where it is cooled and then onto the heater where it is heated, as necessary, to maintain the temperature (±0.1 °C).

Two glass windows (inner and outer) are positioned in opposite walls of the incubator bath. These windows permit light from the photometer lamp to pass through the incubator bath water and through the reaction cells in the bath. The light beam emerges from the outer window of the incubator bath and enters the instrument photometer.

A liquid level sensor detects the water level of the bath. Deionized water is automatically added to the incubator bath, as determined by the liquid level sensor, to compensate for evaporation. This occurs even in standby.

Bath detergent

EcoTergent is a non-ionic, bacteriostatic detergent automatically added to the incubator bath by the ISE pipetter whenever the water is exchanged. It acts as a surfactant to minimize the formation of bubbles that could potentially interfere with the photometer readings. EcoTergent is located between the ISE reagent compartment and the reaction disk. EcoTergent is the substitute product to the previously used Hitergent.

To locate the reagent bottle for EcoTergent, see Figure A-38 on page A-81.

Photometer

The **c** 501 module is equipped with a photometer to measure the absorbencies of the reaction mixtures in the reaction cells.

The photometer lamp is located against the inner ring of the incubator bath beneath the reaction disk. The detector is outside the incubator bath ring, behind the ISE reagent compartment.

To locate the photometer unit, see Figure A-38 on page A-81.

Measurements are taken of all the 160 reaction cells, as the reaction disk is turning.

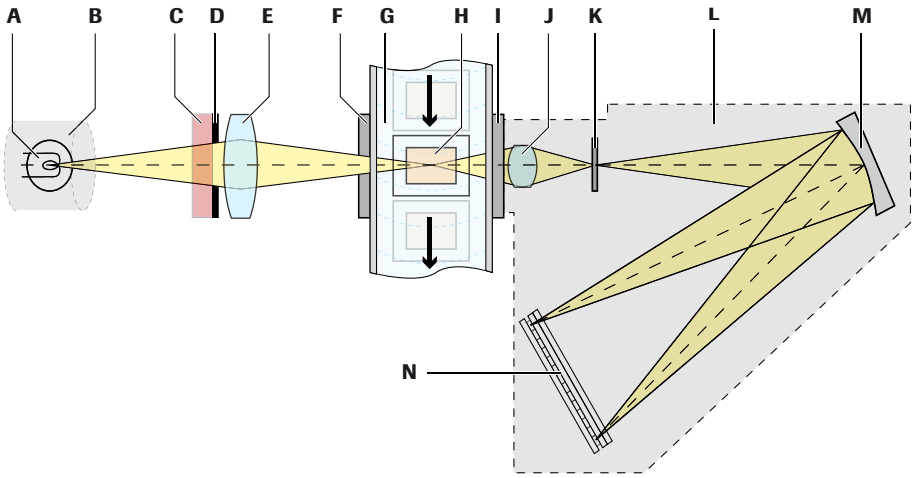

A	Photometer lamp	**F**	Slit (in)	**K**	Slit
B	Water jacket	**G**	Incubator bath	**L**	Photometer
C	Infrared cut filter	**H**	Reaction cell and contents	**M**	Grating
D	Mask	**I**	Slit (out)	**N**	Detector
E	Condenser lens	**J**	Imaging lens		

Figure A-39 Illustration of light path through photometer components

Photometer lamp

The photometer lamp beneath the reaction disk, is encased in a constant-temperature water jacket, which helps to maintain a constant energy output from the lamp, and also extends the lamp life.

For more information about replacing the photometer lamp, see *Replacing the photometer lamp* on page C-112.

Light path The light from the photometer lamp passes through the following main components:

- Inner incubator bath window
- Incubator bath water
- Reaction cell and its contents
- Incubator bath water
- Outer incubator bath window
- ...and into the photometer

When the light beam enters the photometer, it strikes a diffraction grating. This separates the light into its constituent wavelengths and reflects them onto a fixed array of 12 photodiodes. Each photodiode is permanently positioned to detect light at a different wavelength.

The instrument computer uses the available assay parameter information to select the wavelengths and the times at which a reaction mixture's absorbance is read and results are calculated.

The instrument computer keeps tracks of which test is being performed in each reaction cell. The instrument computer also knows when each reaction cell passes through the photometer light path. The instrument computer uses this tracking ability and the programmed read instructions to obtain test results.

Cell rinse unit

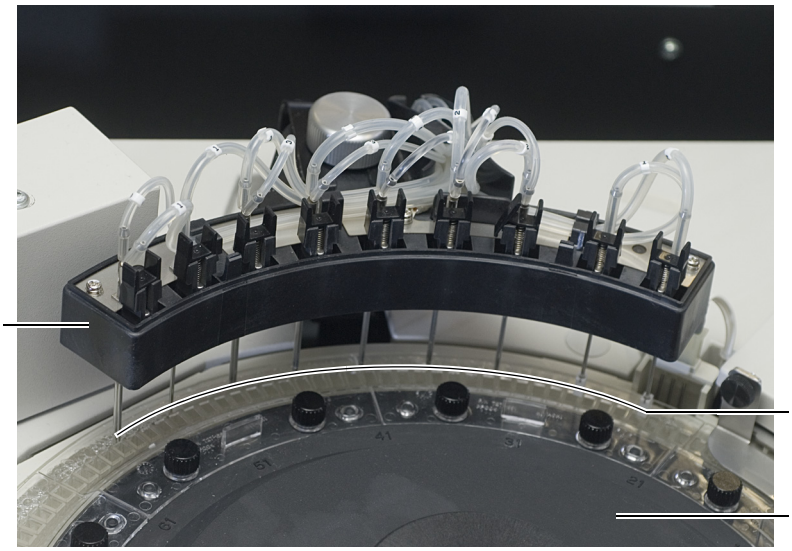

A Cell rinse unit
B Cell rinse nozzles
C Reaction disk

Figure A-40 Reaction cell rinsing system

The cell rinse unit is located to the left of the reaction disk. It cleans, rinses, and dries the reaction cells once the chemical reaction of the reaction measurement is completed. To ensure cell integrity (optical characteristics), a photometric reading of the cell containing water is performed during the cleaning process (cell blank) and compared with the stored value from the weekly cell blank measurement.

Cell rinse sequence

The following sequence reflects the order in which cleaning, rinsing, and cell blanking of the reaction cells takes place.

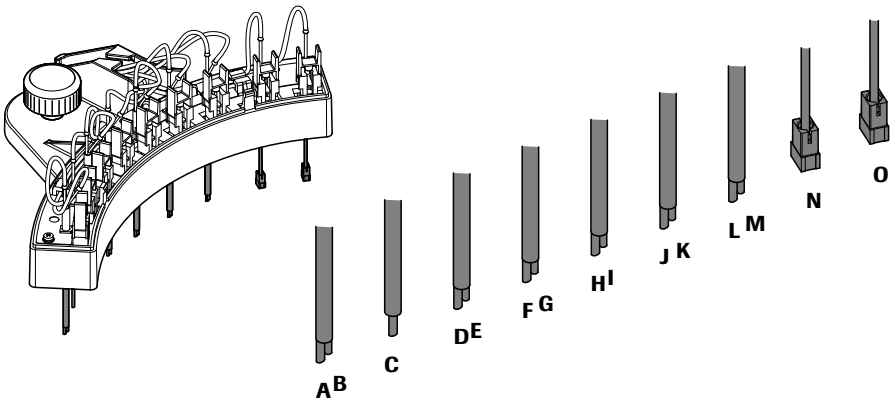

1. L: Liquid aspiration at end of reaction
   M: Rinse water discharge
2. J: Rinse water aspiration
   K: CellCln 1 discharge
3. H: CellCln 1 aspiration
   I: CellCln 2 discharge
4. F: CellCln 2 aspiration
   G: Rinse water discharge
5. D: Rinse water aspiration
   E: Rinse water discharge
6. C: Rinse water aspiration
7. A: Water blank discharge
   B: Water blank overflow aspiration
8. N: Water blank aspiration (nozzle tip)
   O: Water blank aspiration (nozzle tip)

Figure A-41 Flow of the cell rinse mechanism

Flow of photometric analysis

The following sections help to understand the flow of photometric analysis:

- *Main functions on the reaction disk area.*
- *Main steps of photometric analysis*

Main functions on the reaction disk area

The main function and their positions on the reaction disk area are shown below.

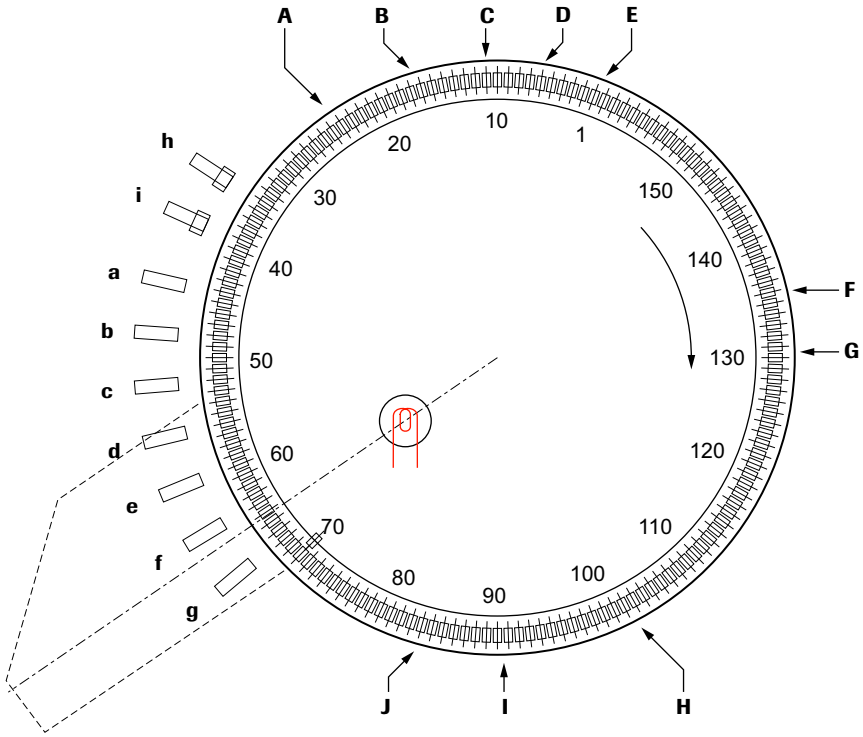

a–i Cell rinsing nozzles
A Reagent 1 mixing
B Reagent 2 mixing
C Reagent 3 mixing
D Sampling (diluted sample)
E Sampling
F Reagent 2 adding
G Reagent 3 adding
H Reagent 1 adding
I Sampling diluted sample for ISE
J Diluting sample for ISE

Figure A-42 Main functions and their positions on the reaction disk area

Main steps of photometric analysis

The main steps of photometric analysis flow are shown below.

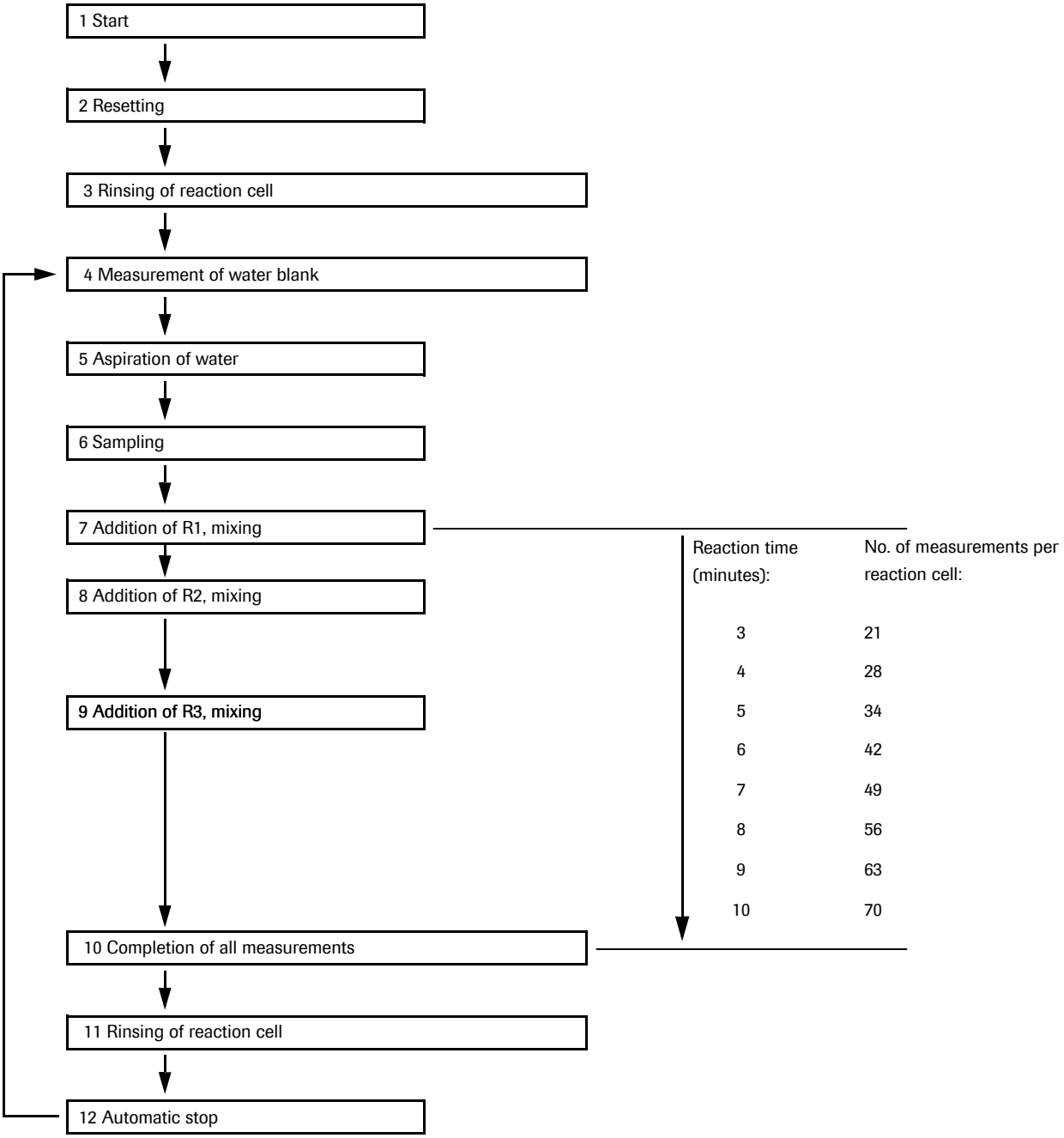

Figure A-43 Flow chart of the photometric analysis

Step	Action
1–2	Upon start, the instrument resets the mechanisms, and then starts rinsing the reaction cell.
	In a single cycle (6.0 s), the reaction disk rotates by 60 reaction cells, stops temporarily, and rotates by a distance of 59 reaction cells. Therefore, the reaction disk rotates 3 turns minus 4 reaction cells in 4 cycles (24.0 s)
3	• Using the rinsing nozzle **a** in the rinsing mechanism, reaction solution is aspirated and the reaction cell is rinsed with deionized water. • Then, after 4 cycles, the reaction cell is washed with rinsing nozzle **b** in the rinsing mechanism using Cell Wash Solution I / NaOH-D. • Then, after 4 cycles, the reaction cell is washed with rinsing nozzle **c** in the rinsing mechanism using Cell wash Solution II / Acid Wash. • Using the rinsing nozzle **d** and the rinsing nozzle **e**, the reaction cell is rinsed again with deionized water. • After deionized water is aspirated with nozzle **f**, rinse water is discharged with nozzle **g**.
4	Then water blank is measured 3 times. If the water blank value differs by 0.1 or more from the cell blank value, that cell is not used for analysis.
5–6	After the water blank measurement, the water is aspirated (using rinsing nozzles **h** and **i**) and the cells are dried and ready for measurement. Sampling is carried out in the order starting from the sample with the test that takes the longest reaction time in order to shorten the time needed for completion of data output.
7–9	Reagents R1, R2, and R3 are usable, and added at the determined positions and time points (0, 1.5 and 5 minutes), respectively. After one of the reagents R1, R2, and R3 has been added, the liquid in the cuvette is mixed at the corresponding mixing position by means of the ultrasonic mixer.
10	Sampling is carried out every 6 s (1 cycle), and measurement is performed once in every full turn, that is 70 times in 10 minutes. On completion of measurement, the concentration is calculated by using the absorbance at the specified measuring point.
11	The instrument discharges the reaction solution with the rinsing mechanism and conducts washing with detergent and rinsing with water.
12	Then the instrument goes into standby.

Table A-7 Flow of photometric analysis

Reaction monitoring

The **c** 501module adopts the entire reaction monitoring system, which measures the absorbance of reaction solution intermittently during reaction time. The reaction disk rotates 3 turns in 24 seconds. During this time, the absorbance is measured and stored for all of reaction cuvettes that go across the optical path of the photometer. For each reaction cuvette, water blank (absorbance 0) is measured, and then photometry is performed about every 8 seconds, or 70 times in 10 minutes. Analysis method can be set flexibly by using arbitrary measuring points for concentration calculation.

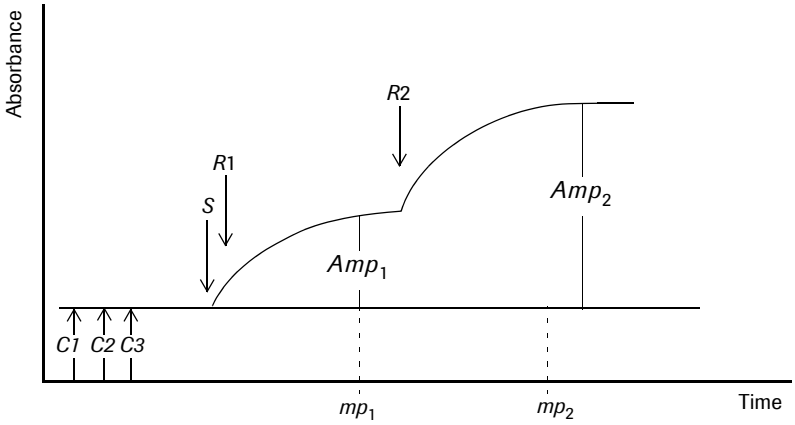

Figure A-44 Reaction course

Behind the front doors

Figure A-45 provides a front view of the **c** 501 module and lists the main components behind the front doors of the module.

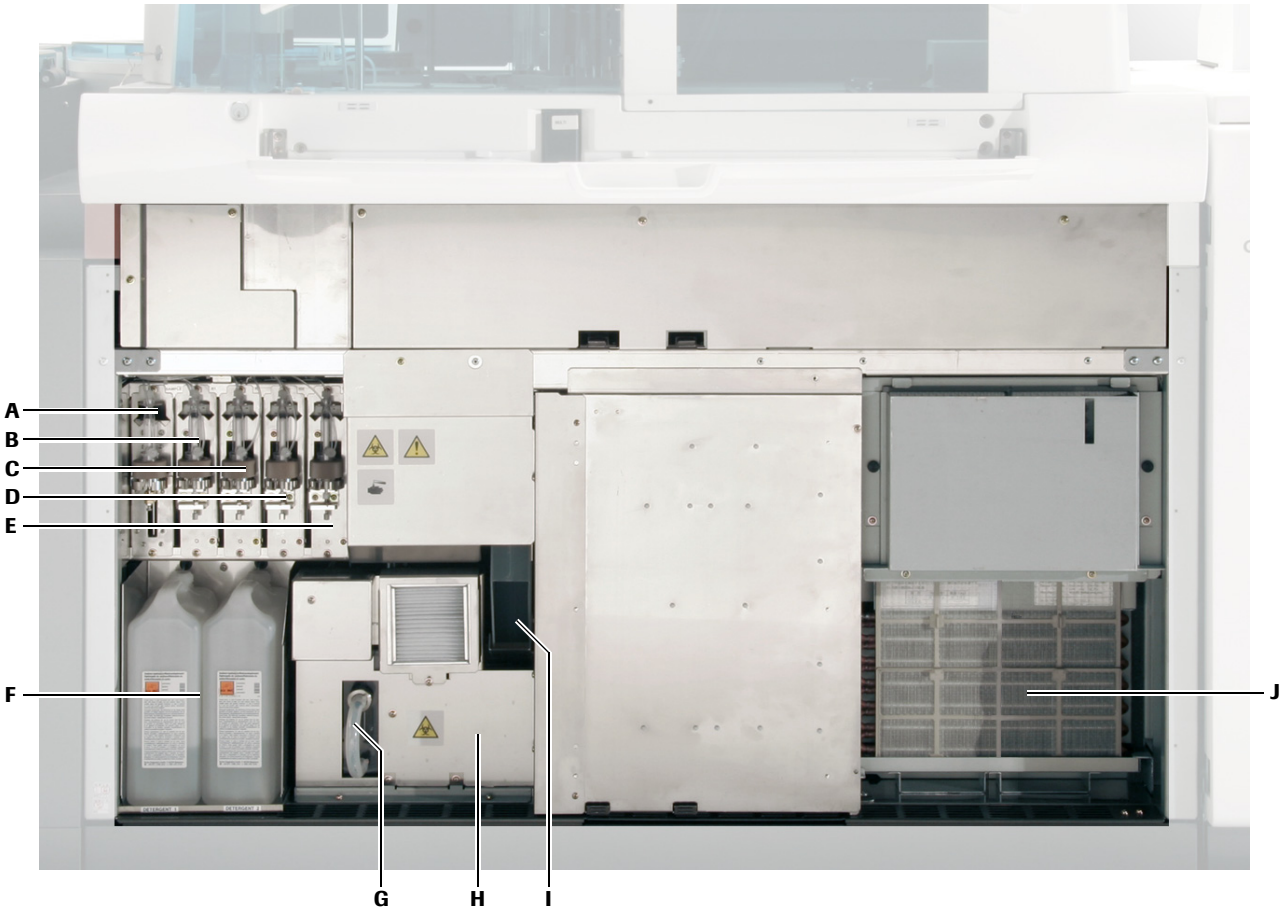

A	Sample syringe	**E**	ISE sipper syringe	**G**	Vacuum tank
B	Reagent 1 syringe	**F**	Cell detergents:	**H**	Vacuum pump
C	Reagent 2 syringe		Cell Wash Solution I / NaOH-D and	**I**	Reagent cassette disposal
D	ISE probe syringe		Cell Wash Solution II / Acid Wash	**J**	Cooling unit with radiator filter

Figure A-45 **c** 501 module with open front doors

Auxiliary reagents and cleaning solutions

Auxiliary reagents of the **c** 501 module are located both behind the front door and in the reaction disk area:

- Two large bottles with detergents for the cell rinse process are located behind the left front door of the **c** 501. They contain Cell Wash Solution I / NaOH-D (Cell Wash Solution I / NaOH-D) and Cell Wash Solution II / Acid Wash (Cell wash Solution II / Acid Wash).
- Two small bottles (70 mL) containing Sample Cleaner 1 and Sample Cleaner 2 are located close to the sample pipetter, and one bottle of EcoTergent is located close to the ISE pipetter.
  - Sample Cleaner 1 and Sample Cleaner 2 are used for cleaning the sample probe.

    See Figure A-38 on page A-81 (**G**).
  - EcoTergent is an additive to the incubator bath to reduce surface tension and microbial proliferation.

    See Figure A-38 on page A-81 (**I**).

For more information about auxiliary reagents, see *Auxiliary reagents* on page B-116.

Vacuum system

The vacuum system is located at the front of the module. It consists of vacuum pump, vacuum tank, vacuum sensors, and connecting tubing. The vacuum system aspirates reaction mixture waste from the reaction cells to the reaction waste container and removes reaction cell rinse water from the module through the main drain line.

To locate the vacuum system, see Figure A-45 on page A-90.

Rear view

Figure A-46 provides a rear view of the **c** 501 module assembled with a **cu** 150 core unit. The legend lists the main components on the back of the analyzer.

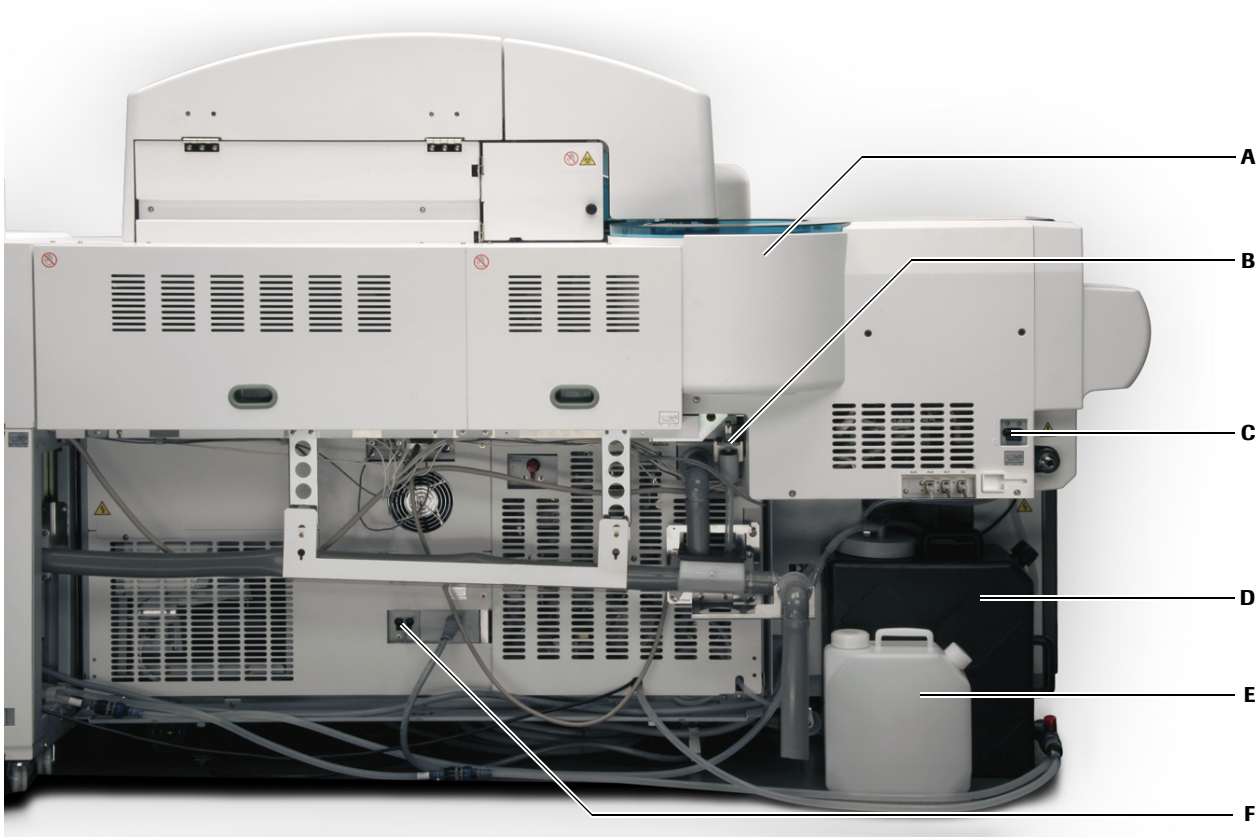

A Rack rotor
B Drain port (connected to the drain pipe)
C Core unit module switch
D Water tank
E High concentrated waste
F **c** 501 module switch

Figure A-46 **c** 501 rear view

ISE area components

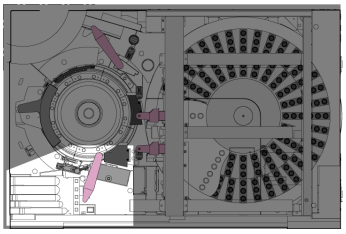

The ISE unit provides an electronic method for measuring sodium, potassium, and chloride ion activities in samples. It is designed to process up to 600 tests or 200 samples per hour. The ISE unit of the **c** 501 module consists of the following components:

- ISE pipetting system
- Internal standard bath (IS bath)
- ISE sipper mechanism
- ISE measuring system
- ISE rinse station
- ISE reagent compartment

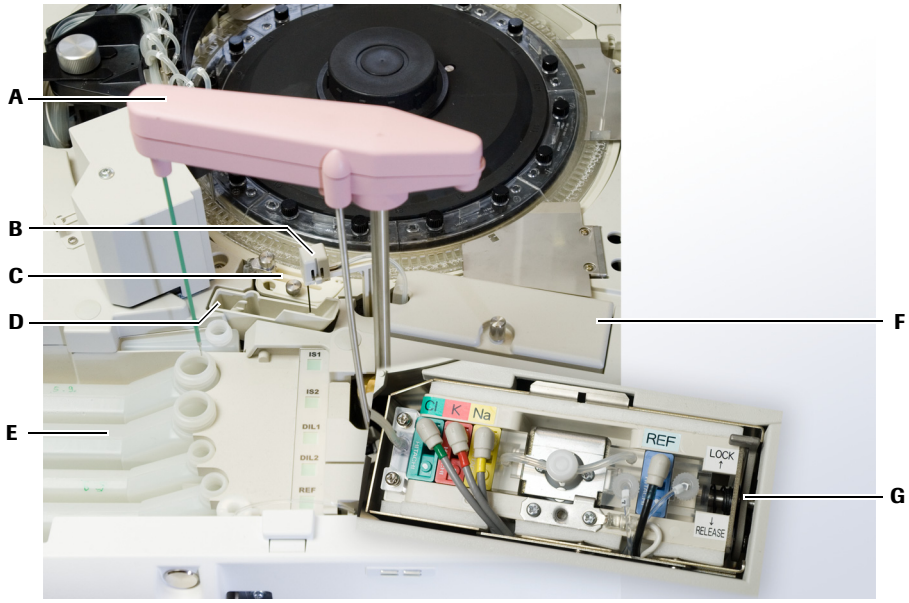

A	ISE pipetter	**D**	ISE rinse station
B	ISE sipper	**E**	ISE reagent compartment
C	IS baths	**F**	Cover of the ISE measuring system
		G	ISE measuring system

Figure A-47 **c** 501 ISE unit

The ISE area of the **c** 501 module comprises the following components:

- One internal standard bath with two chambers (IS bath)—for heating internal standard (ISE IS) to measuring temperature (37°C)
- ISE pipetting system
- ISE sipper mechanism—for aspirating ISE IS and sample solution into the measuring system
- ISE reagent compartment—containing bottles for ISE IS, ISE Dil., and ISE Ref. (KCL)
- ISE measuring system

ISE pipetting system

The ISE pipetting system is composed of a pipetter (consisting of pipetter arm and probe), a syringe, and the ISE rinse station. The pipetter is connected by tubing to the syringe, which controls the pipetting action.

ISE pipetter probe The ISE pipetter probe is equipped with a level detector (capacitance method). These features are similar to the sample probe, however, ISE and sample probes are not equal in construction and cannot be exchanged.

ISE syringe The ISE syringe is located behind the left front door of the **c** 501 module. It is the fourth syringe (from left to right), between the R2 and the sipper syringe.

ISE rinse station The ISE rinse station is located between the IS bath and the reagent compartment. This rinse station is used for both ISE pipetter probe and sipper probe.

Internal standard bath

Internal standard bath (IS bath) has two chambers for heating internal standard (ISE IS) to measuring temperature (37°C). The use of two chambers allows an optimized flow of the analysis: While the content of one chamber is ready for use, fresh ISE IS is pipetted into the other chamber where it is given time to heat up for the next measurement.

ISE sipper mechanism

The ISE sipper mechanism consists of a sipper nozzle and a sipper syringe.

Sipper nozzle The sipper nozzle lowers either into ISE IS solution in the IS bath or into sample solution in a reaction cell to aspirate the respective solution into the measuring flow path.

Sipper syringe The sipper syringe is positioned behind the left front door of the **c** 501 module. It is the rightmost syringe (to the right of the ISE reagent syringe). The syringe not only provides the negative pressure for the sipper but also aspirates ISE Ref. from its container and into the reference cartridge flow path.

ISE measuring system

The ISE measuring system is—together with the IS bath—contained in a temperature-controlled compartment. It is composed of three channeled sample/ISE IS measurement cartridges and one reference cartridge.

Measurement cartridges

Three cartridges, each containing an ion-selective electrode, are directly connected to form a flow path for the diluted sample and the ISE IS solutions. The electrode potentials are measured in the color-coded cartridges as follows:

Red	Potassium	K^+
Yellow	Sodium	Na^+
Green	Chloride	Cl^-

Reference cartridge

The reference cartridge contains the reference electrode. ISE Ref. is aspirated through the cartridge and a reference electrode potential is registered.

The difference between the potentials at the reference electrode and the ion-selective electrode equals the electromotive force (EMF). For every test, the EMF of both ISE IS and diluted sample solution are measured for each sort of ions (Cl^-, K^+, and Na^+). From these EMF values the results are calculated.

ISE rinse station

At the ISE rinse station both ISE pipetter probe and sipper probe are rinsed with deionized water. To avoid contamination, clean the rinse station at least once a week.

See *Cleaning the rinse stations* on page C-85.

ISE reagent compartment

The ISE reagent compartment provides five positions for reagent bottles: Two positions for ISE IS, two for ISE Dil., and one for ISE Ref. bottle.

The reagent compartment is equipped with position sensors for each reagent bottle (reflection type).

A green indicator lamp (next to the reagent position) lights up if no reagent bottle is present or if the liquid level falls below the limit where the bottle needs to be replaced. In this case the ISE probe pipettes from the second bottle of the reagent (changeover reagent). If the second bottle of ISE IS is used as changeover reagent, a changeover calibration is automatically recommended by the system.

For more information on level detection and ISE reagent registration, see:
ISE pipetting system on page A-94
Reagents for ISE applications on page B-109

Flow of an ISE analysis

At the beginning of an electrolyte analysis, the sample pipetter pipettes a sample into a reaction cell. Then, into this cell, ISE Dil. is pipetted by the ISE pipetter and mixing is carried out with the ultrasonic mixing unit. Next, the ISE pipetter dispenses ISE IS solution into the IS bath where it is heated to 37°C.

After heating, the ISE IS solution is aspirated into the measuring flow path to perform an ISE IS measurement (single-point calibration). The residual ISE IS solution is aspirated through the vacuum nozzle to empty the IS bath. Then, the sipper aspirates diluted sample from the reaction cell and the sample measurement is performed.

For every ISE measurement, the analyzer measures three electromotive force values (EMF); for chloride, potassium, and sodium, where EMF denotes the difference in potential between the respective ion-selective electrode and reference electrode.

Finally, the results are calculated from the electromotive forces of ISE IS and diluted sample. The ISE system is now ready for the next analysis. If there are no more samples to be analyzed, the ISE unit performs a final ISE IS measurement and stops. Table A-8 summarizes the flow of an ISE analysis:

Step	Time	Actor	Action
		Preparation of measurement	
1	0.0 s	Sample pipetter	Pipettes sample (9.7 µl) to cell
2	12.0 s	ISE pipetter	Aspirates (348 µl) and dispenses ISE Dil. (291 µl) to cell
3	15.0 s	Ultrasonic mixing unit	Mixes sample and ISE Dil.
4		ISE pipetter	Aspirates (590 µl) and dispenses ISE IS (450 µl) to IS bath
5		IS bath	ISE IS heats to measuring temperature (37°C)
		Internal standard (ISE IS) measurement	
6	284.5 s	ISE Sipper	Aspirates ISE IS to Cl/K/Na electrodes (400 µl)
7		Sipper syringe via tubing	Aspirates ISE Ref. from the ISE Ref. bottle to reference electrode (65 µl)
8	292.0 s	Electrodes	Measure ISE IS
		Diluted sample measurement	
9	301.0 s	ISE Sipper	Aspirates sample to Cl/K/Na electrodes (250 µl)
10		Sipper syringe via tubing	Aspirates ISE Ref. from the ISE Ref. bottle to reference electrode (65 µl)
11	310.0 s	Electrodes	Measure sample
		Finalization of measurement	
12	315.0 s		Result calculation and output If there are more samples to be analyzed, go to step 1. If there are no more samples, repeat 6-8 and stop.

Table A-8 Flow of ISE analysis

e 601 module

This chapter provides a detailed description of the **e** 601 module, its components and technical specifications. In addition, an overview of the reagents used on the **e** 601 module is provided.

In this chapter

Chapter **5**

Overview A-99
System characteristics A-99
Components of the e 601 module A-100
Reagent area components A-101
Reaction area components A-103
Pre-wash area components A-105
Consumables area components A-107
Auxiliary reagents and cleaning solutions A-110

Overview

The **e** 601 module is a fully automated analyzer for immunoassay analysis. It is designed for both quantitative and qualitative in vitro determinations using a large variety of tests for analysis. Samples are transported to the **e** 601 module by the core unit of the **cobas** 6000 system.

The throughput of the **e** 601 module is up to 170 tests per hour.

Figure A-48 **e** 601 module

This chapter describes the **e** 601 module. The rack rotor and rack sampler unit belong to the core unit.

For a detailed description of the core unit, see Chapter 3 *Control unit, cobas link and core unit*.

System characteristics

- Heterogeneous immunoassays with ECL technology
- 2 ECL measuring cells
- 170 tests/hour throughput on one **e** 601 module
- Storage for 25 **cobas e** packs on one **e** 601 module
- Disposable tips for sample pipetting to prevent carryover
- Incubator disk with 54 incubator positions (37°C)
- Non-invasive vortex mixer
- Automated maintenance functions
- Automatic rerun capability
- Automatic calibration notification
- Automatic sample dilution capabilities

Components of the e 601 module

Figure A-49 shows the different areas of the **e** 601 module from a top-view perspective:

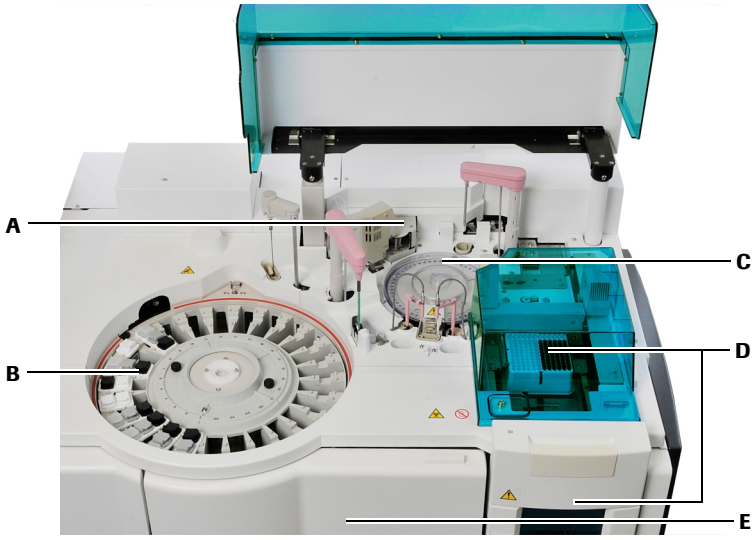

A Pre-wash area
B Reagent area
C Incubator
D Consumables area
E Auxiliary reagents area (behind the front doors)

Figure A-49 **e** 601 module: top view

The **e** 601 module can be subdivided into the following areas

- Reagent area
  See *Reagent area components* on page A-101.
- Reaction area
  See *Reaction area components* on page A-103.
- Pre-wash area
  See *Pre-wash area components* on page A-105.
- Consumables area
  See *Consumables area components* on page A-107.
- Auxiliary reagents area (behind the front doors)
  See *Auxiliary reagents and cleaning solutions* on page A-110.

Reagent area components

The reagent area is on the left side of the analytical module and consists of the following components:

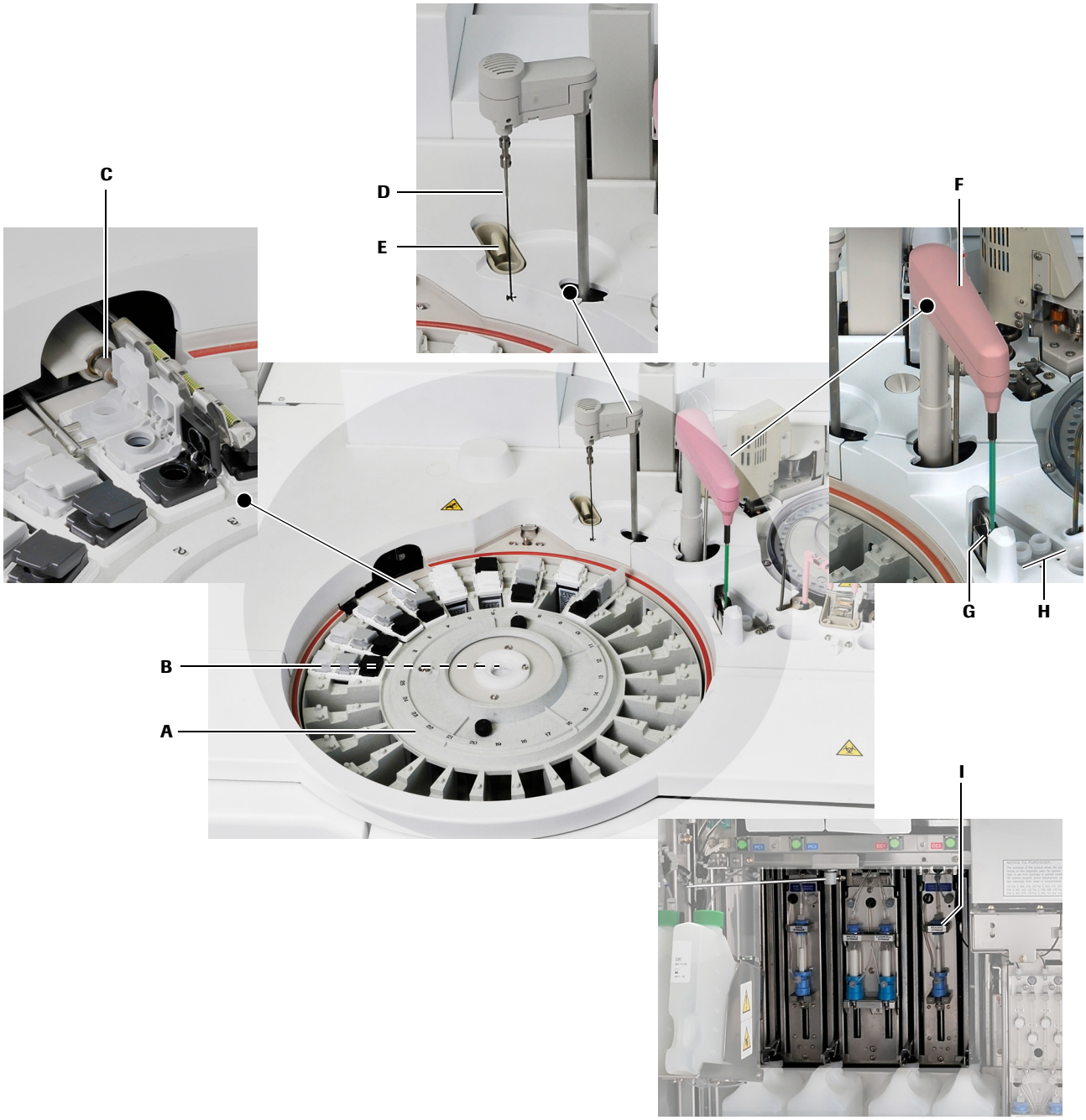

A Reagent disk
B Barcode reader
C Reagent Cap Open/Close mechanism
D Microbead mixer
E Microbead mixer rinse station
F Reagent probe
G Reagent probe rinse station
H ProbeWash station
I Reagent syringe

Figure A-50 Reagent area components

Reagent disk

The reagent disk is located on the left side of the analytical module and contains 25 positions for assay, diluent or pretreatment **cobas e** packs. The reagent disk is temperature controlled at 20 ±3 °C.

Diluent or pretreatment reagents can be placed in ANY position on the reagent disk. More than one **cobas e** pack can be loaded on the reagent disk for each test at any time.

Barcode reader

The barcode reader is located in the center of the reagent disk and reads the 2D matrix barcode on the **cobas e** packs.

Reagent Cap Open/Close mechanism

To prevent reagents from evaporating, and for ease of use, the reagent disk utilizes a reagent cap open/close mechanism during reagent pipetting. The mechanism is located on the back wall of the reagent disk compartment and emerges when **cobas e** packs need to be opened or closed. The system can be configured to open caps prior to pipetting or mixing the specific reagent (for example, M, R1 or R2) and close them again afterwards, or to leave the cap open during operation.

Soft-close position of caps

Before loading a reagent pack, open the caps manually and set them gently to the so called soft-close position: The caps are almost closed, but not tightly closed. This ensures the caps can be opened by the mechanism.

See *Caps of cobas e pack* on page B-121.

Microbead mixer with rinse station

The microbead mixer, located beside the reagent disk, mixes the microbeads to ensure a homogeneous suspension before aspiration.

The microbead mixer rinse station rinses the microbead mixer with deionized water each time it has been used.

Reagent probe with rinse station

The reagent pipetter, located between reagent disk and incubator, aspirates reagent from the **cobas e** packs on the reagent disk and dispenses it into the AssayCups in the incubator. To prevent reagent carryover, the reagent probe is rinsed after each pipetting operation at the rinse station. The reagent probe also has liquid level sensing for accurate pipetting.

The reagent probe rinse station rinses the reagent probe externally and internally with deionized water between aspirations.

ProbeWash station

The ProbeWash station, located on the analytical module near the reagent probe, consists of two bottles of ProbeWash. ProbeWash is used to wash the inside of the reagent probe to prevent carryover.

For information about special wash, see *Special Wash* on page B-301.

Reagent syringe

The reagent syringe is located on the right behind the front door of the analytical module. The syringe is filled with deionized water and uses positive displacement to aspirate and dispense from the reagent probe.

Reaction area components

The reaction area is in the middle of the analytical module and consists of the following components:

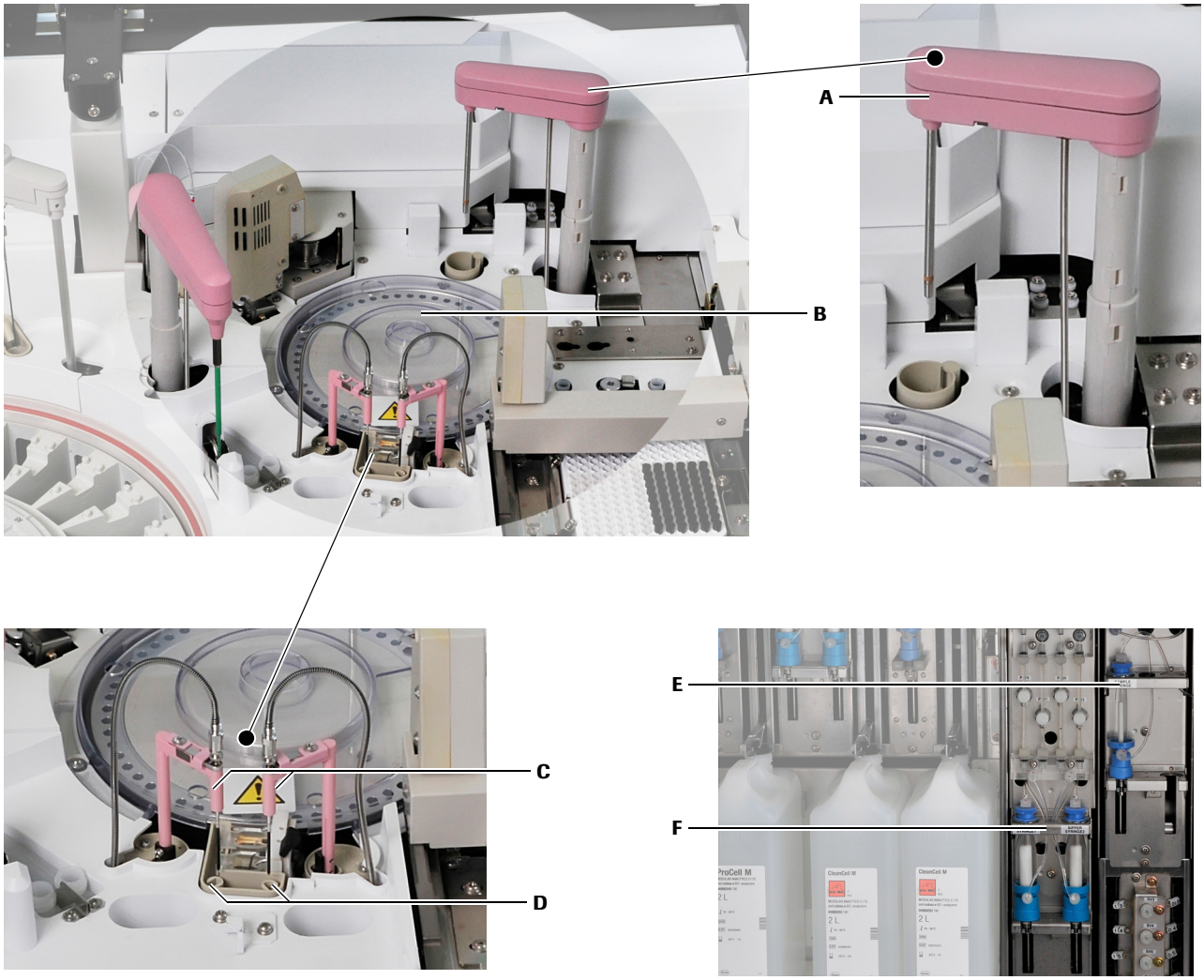

A	Sample probe	**C**	Sipper probes	**E**	Sample syringe
B	Incubator disk	**D**	Sipper probe rinse stations	**F**	Sipper syringes

Figure A-51 Reaction area components

Sample probe The sample probe is located at the back of the analytical module near the core unit. The sample probe transports the sample, calibrator or control fluids from the sample tubes in the racks at the sampling position into the AssayCups in the incubator. The probe uses a new disposable tip for every pipetting sequence to prevent carryover and has liquid level and clot detection for accurate pipetting. Liquid level detection is accomplished by capacitance measurement. Clot detection is accomplished by a pressure transducer.

Sample syringe

The sample syringe is located on the right behind the front door of the analytical module. The syringe is filled with deionized water and uses positive displacement to aspirate and dispense from the sample probe.

Incubator disk

The incubator disk contains 54 positions for AssayCups and is located approximately in the center of the analyzer unit. It is maintained at a temperature of 37.0 ±0.3 °C to ensure/facilitate reaction between the sample and the reagents that have been dispensed into an AssayCup.

When an assay is ready for measurement, the incubator rotates, moving the AssayCup to the various positions in the assay protocol process. The incubator transports each AssayCup to the position where the appropriate unit performs its respective task.

Sipper probes with rinse stations

There are two sipper probes located in front of the incubator (one probe for measuring cell 1 and the other probe for measuring cell 2). These aspirate the reaction mixture from the AssayCup in the incubator into the measuring cells as well as the ProCell and CleanCell from their respective cups in front of the sippers.

One rinse station for each sipper probe is located next to the sipper probes. The sipper probes move between measurements to their rinse stations and are washed externally with deionized water. In standby mode, the sipper probes are located directly above their rinse stations.

Sipper syringes

The sipper syringes are located on the right behind the front door of the analytical module. The pipetters are filled with deionized water and use positive displacement to aspirate and dispense from the sipper probes.

Measuring cell

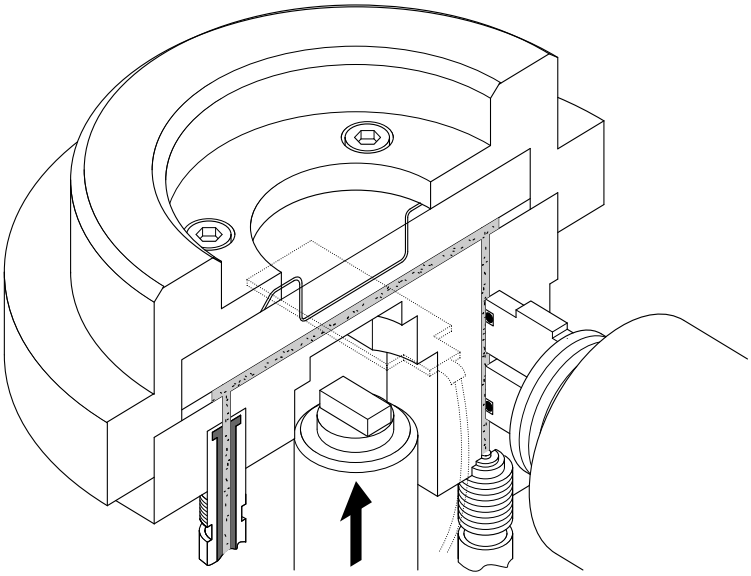

Figure A-52 Measuring Cell

The two measuring cells, which are located inside the analytical module, are the central components of the measuring cells of the **e** 601 module for the determination of samples. Each unit contains a photomultiplier tube, peltier, flow-through measuring cell, magnet drive assembly and an amplifier circuit board.

Pre-wash area components

The Pre-wash station is located in the middle at the back of the analytical module. It carries out a pre-wash step to remove interfering components from the reaction solution before the mixture goes into the measuring cell if defined in the assay protocol.

It consists of the following components:

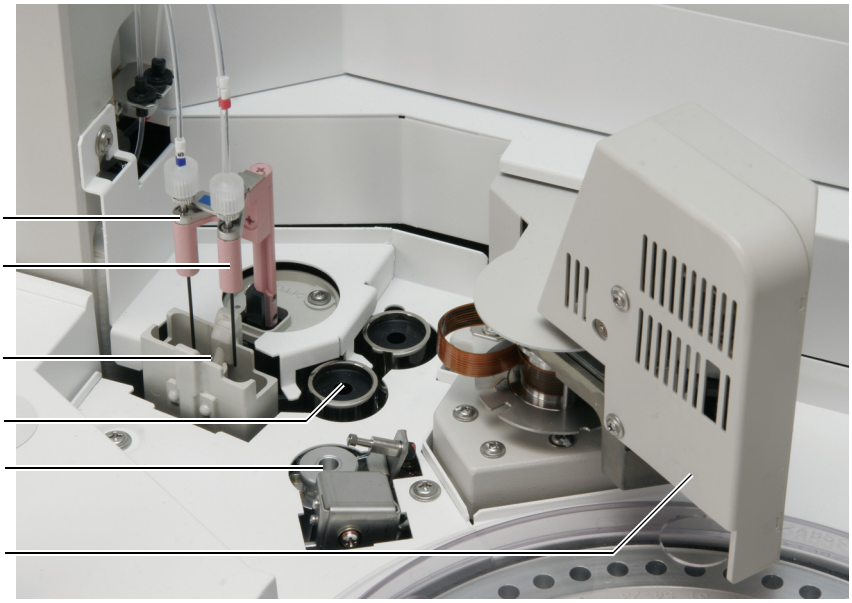

A	Dispenser	**D**	Separation stations
B	Sipper	**E**	Vortex mixing station
C	Rinse station	**F**	Gripper

Figure A-53 Components of the Pre-wash area

Pre-wash gripper

The Pre-wash gripper is located at the back and on the left of the incubator and can move between the incubator and the Pre-wash area.

It is equipped with gripping fingers for gripping AssayCups which are filled with the reaction solution in the incubator and transporting them to the separation stations in the Pre-wash area and back. The gripper also transports the AssayCups from the separation stations to the vortex mixer.

Pre-wash sipper

The sipper is located at the back and on the left of the Pre-wash area, beside the dispenser. It aspirates the reaction solution from the AssayCup positioned in one of the separation stations.

Pre-wash dispenser

The dispenser is located at the back and on the left of the Pre-wash area, beside the sipper. It dispenses PreClean solution (a phosphate buffer) into the AssayCup after the sipper has drained the reaction solution.

Rinse station The rinse station for sipper and dispenser probes is located beside the sipper and dispenser. It rinses the corresponding probe after each aspiration or dispensing procedure with deionized water.

Separation stations Two separation stations (AssayCup holders) are located in front of the sipper and dispenser, which are in the middle of the Pre-wash area. The separation stations are permanent magnets used to capture the microbeads in the AssayCup as the reaction solution is being aspirated by the sipper.

Vortex mixing station The vortex mixing station is located between the gripper and the separation stations. After the wash procedure, the AssayCup is positioned here by the gripper to resuspend microbeads in the PreClean solution.

Consumables area components

The components of the consumables are located on the right of the analytical module.

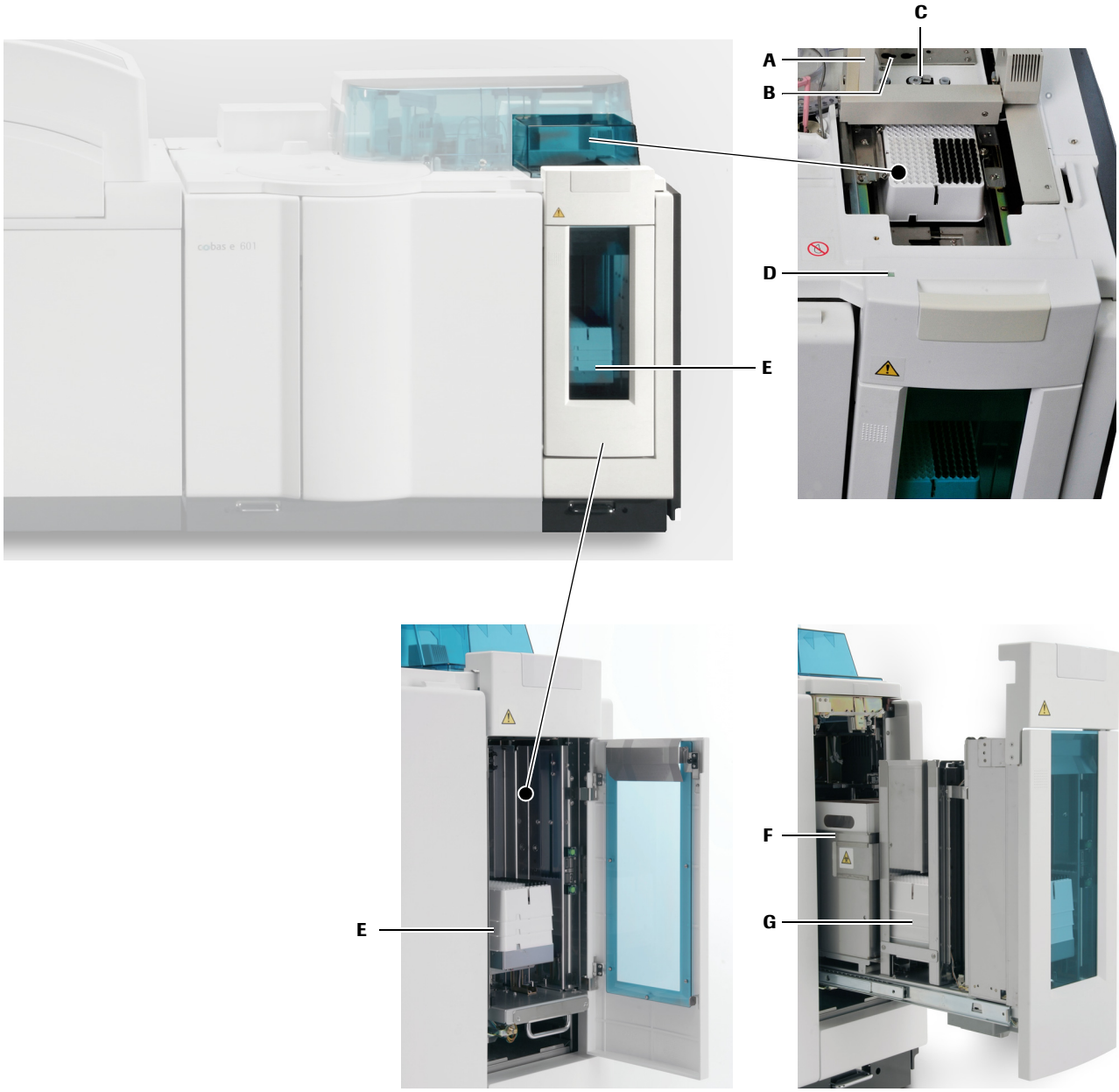

A Gripper
B Assay tip buffer station with disposal opening
C Vortex mixing station
D Indicator lamp
E Magazine lifter
F Solid waste containers
G Magazine waste compartment

Figure A-54 Consumables area components

Gripper

The gripper is located on the right of the analytical module and can move in 3 directions:

- X (left and right)
- Y (forward and back)
- Z (up and down)

It is equipped with gripping fingers for gripping tips or AssayCups. The gripping fingers grip an AssayCup from the magazine and transport it to the incubator or from the incubator to the vortex mixing station. After the AssayCup has been used, the gripper transports it to the cup disposal opening. The gripper also transports tips from the tip tray to the tip buffer where the sample probe picks them up for the next sampling.

During operation, the gripper is supplied with tips and AssayCups from the magazine lifter, which transports the magazines to the surface of the analytical module. Empty magazines are discarded automatically to the magazine waste inside the analytical module.

Vortex mixing station

The vortex mixing station, located between the gripper and the tip buffer, mixes the reaction solution after reagent delivery. AssayCups are transported here from the incubator by the gripper.

Assay tip buffer station with disposal openings

The AssayTip buffer station with disposal openings is located between the vortex mixing station and the sample probe. The gripper transports new tips here as required by the sample probe. The sample probe takes the new tip and, after pipetting samples, discards the used tip at the disposal opening into the active solid waste container.

AssayCup disposal openings

Used AssayCups are discarded by the gripper in the AssayCup disposal openings, located between the incubator and the vortex mixing station. The used cups pass into the active solid waste container.

AssayCup and tip magazine lifter

The magazine lifter is located behind the right front door of the analytical module and is the first compartment of the magazine drawer. It consists of the magazine lifter, the magazine waste, and the solid waste containers. The magazine lifter transports the full magazines to the surface of the analytical module as required. The lifter can be loaded with magazines by opening the transparent door of the magazine drawer. The magazines can be loaded on the magazine lifter only when the green indicator lamp is permanently illuminated.

Magazine waste compartment

The magazine waste compartment contains the empty magazines. It is located behind the right front of the analytical module and the middle part of a magazine drawer, which consists of the magazine lifter, the magazine waste, and the solid waste containers. The magazine waste can be emptied by pulling out the magazine drawer. The magazine drawer can be pulled out only when the green indicator lamp is permanently illuminated.

Solid waste containers

The solid waste containers are located behind the right front of the analytical module. They are the third compartment of a magazine drawer that consists of the magazine lifter, the magazine waste, and the solid waste containers. The 2 containers are used alternately. When one becomes full, the other becomes active. The full waste container can be emptied only when the green indicator lamp on the magazine drawer is permanently illuminated (i.e., the magazine drawer can be pulled out). The green button corresponding to the container should be pressed after the container has been emptied.

Green indicator lamp

The indicator lamp is located on the top of the right front door and indicates when the magazine drawer and door can be opened.

Green indicator lamp On	Drawer safe to open
Green indicator lamp flashing	About to operate—DO NOT open

Auxiliary reagents and cleaning solutions

The auxiliary reagent bottles of ProCell and CleanCell (two each) are located behind the front door of the e 601 module, and two bottles of PreClean are mounted on the inside of the door itself.

A PreClean bottles

B ProCell bottles (in keyed positions)

C CleanCell bottles (in keyed positions)

Figure A-55 Auxiliary reagents behind the front door

PreClean bottles

Two bottles of PreClean are located in the inner side of the front door of the module. Each bottle has a volume of 600 mL. Two bottles of each reagent allow bottle changeover without interrupting operation. The system monitors the amount of PreClean available by counting the number of pipetting actions. In addition, liquid short sensors are available in case of inaccurate counting due to incorrect loading of PreClean bottles.

See *Replacing empty PreClean* on page B-139.

ProCell and CleanCell bottles

Two bottles of ProCell and two bottles of CleanCell are located in special, keyed positions behind the front door:

- ProCell is a buffer solution containing tripropylamine (TPA). These bottles are identified with white caps and a special shape of the bottom of the bottle.
- CleanCell is a solution of potassium hydroxide (KOH) which is used to clean the measuring cell after measurement. CleanCell bottles are identified with black caps and a special shape of the bottom of the bottle.

The ProCell and CleanCell bottle positions are keyed to ensure the correct reagent is placed in the proper position. Each bottle has a volume of 2 liters and approximately two mL of each solution are needed for one determination. Two bottles of each reagent allow bottle changeover without interrupting operation.

See *Replacing ProCell and CleanCell when not empty* on page B-140.

If a ProCell bottle is replaced, the lot number of the new bottle must be entered into the system.

Specifications

This chapter gives an overview of the specifications of the **cobas** 6000 analyzer series and its modules.

In this chapter

Chapter **6**

General system specifications A-115
Dimensions A-115
Operating conditions A-116
Environmental conditions A-117
System interface A-117
System start A-117
Barcode types A-118
Sample cups and tubes A-120
Sample racks A-121
Control unit A-122
Core unit cu 150 ..... A-122
c 501 module A-123
Reaction system (c 501) A-123
Sampling system (c 501) A-123
Reagent system (c 501) A-124
Photometric measuring system A-124
ISE unit A-125
e 601 module A-126
Reaction system (e 601) A-126
Sampling system (e 601) A-126
Reagent system (e 601) A-127
ECL measuring system A-127

General system specifications

The following specifications apply to the **cobas** 6000 analyzer series.

Dimensions

Dimension	Module	International (Europe)	US
Depth	Max.	1040 mm	41.0 in
Height	**c** 501 module	1300 mm	51.2 in
	e 601 module	1140 mm	44.9 in
Length	rack sampler unit of **cu** 150	690 mm	27.2 in
	c 501 module	1200 mm	47.2 in
	e 601 module	1200 mm	47.2 in
Weight	**c** 501 module	330 kg	730 lb
	cu 150 incl. rack sampler unit and rack rotor	180 kg	400 lb
	e 601 module	360 kg	795 lb

Operating conditions

The power distribution panel and the water supply and drainage facilities must be available within 5 m of the system.

Water requirements

Bacteria-free, deionized water	< 10 cfu/mL
Conductivity	1.0 µS/cm or less
Water pressure	50-340 kPa
Water supply volume	• typical water consumption: • <c> system: 10 L/h • <e> system: 12 L/h • <cc> system: 20 L/h • <ce> system: 22 L/h • <ee> system: 24 L/h • <cce> system: 32 L/h • <cee> system: 34 L/h • max. water consumption per **c** 501 module: 40 L/h[(a)] • max. water consumption per **e** 601 module: 30 L/h[(a)]

(a) These max. water consumptions are theoretical values that may occur temporarily in service mode. Thus, the water supply of the laboratory must provide the max. water consumption of the system, for example 110 L/h for a <cce> system.

Electric power supply

Line voltage	Single phase AC 200/208/220/230/240V 50/60Hz
Power supply fluctuation	No significant power supply fluctuation (max. power supply change: ± 10%)
Overvoltage category	II
Pollution degree	2
Power consumption [(a)]	max. power consumption during Operation: • <c> system: 1.8 kVA • <e> system: 1.4 kVA • <cc> system: 2.6 kVA • <ce> system: 2.4 kVA • <ee> system: 2.6 kVA • <cce> system: 3.7 kVA • <cee> system: 3.6 kVA

(a) Power consumption is measured in one hour, at 25°C, and at AC 200V 50Hz.

The power supply must be grounded. The system can only be connected to a power supply source with the specified mains cable and only by authorized personnel.

Environmental conditions

The following environmental conditions should be followed in order to ensure correct operation of this system:

Ambient temperature	During operation: 18 to 32°C (64.4-89.6°F) with changes < ± 2°C/h (± 3.6°F/h) During transportation and storage: -20 to 75°C (-4 to 167°F)
Ambient humidity	During operation: 30-85% (non-condensing)[(a)] During transportation and storage: 5-95%
Altitude	< 2000 m
Electromagnetic interference	• No equipment generating electromagnetic waves in the near vicinity (e.g., cell phones, transceivers, cordless phones, etc.) • No machines discharging ultrahigh frequencies (e.g., electric discharger)
Noise levels	< 65 dB for surrounding
Other environmental conditions	• Dust-free environment with adequate ventilation • No direct sunlight • No perceptible vibration • Indoor use only
Floor condition	• Level (angle: less than 1/200) • Strong enough to support the weight of the instrument (approximately 500 kg/m^2) [(b)]

(a) Only valid for systems with appropriate hardware update.
(b) See *Dimensions* on page A-115.

System interface

The instrument can be bidirectionally interfaced with a Host.

System interface	RS-232C serial interface

All data processing equipment connected to the system must comply with the relevant standards of IEC, UL and CSA.

System start

System start-up time	12 min. (power on to standby) for a <ce> system

Barcode types

Barcodes used with the **cobas** 6000 analyzer series must be in compliance with one of the following standards:

- NW7 (Codabar)
- Code 39
- ITF
- Code 128

Sample barcodes

The following specifications apply to the various barcode types:

Reading method	Scanning with CCD sensor	
Used barcode symbol	NW7 (Codabar), Code 39, ITF, Code 128	
Check digit	Must be used to prevent scanning errors.	
Number of ID digits	NW7	3-13 digits + 1 digit (with check digit)
	Code 39	3-13 digits + 1 digit (with check digit)
	ITF	3-13 digits + 1 digit (with check digit)
	Code 128	4-12 digits + 2 digits (with check digit)
Characters usable for ID	NW7	0 to 9, -, /, ., $, :, + [(a)]
	Code 39	0 to 9, A to Z, -, ., [ ], /, +, $, %
	ITF	0 to 9
	Code 128	Alphanumeric (excluding those assigned to functions and communications)
Check digit	NW7	Modulus 16, Modulus 11, Modulus 10/2 weight, Modulus 10/3 weight, 7 check DR, weighted Modulus 11, Modulus 10/2 weight A
	Code 39	Modulus 43
	ITF	Modulus 10/3 weight

(a) For more information about usable characters and check digit characterization, refer to the common specifications for the different barcode types.

Sample rack barcodes

The following barcode types are used for sample racks:

Barcode, number of digits	ITF	5 digits + check digit

Scan range for sample barcodes

Confirm that the barcode zone starts at a minimum of 20 mm above the bottom of the tube. The barcode must be within the zone of 63 mm and must have a blank area of ≥ 5 mm at both ends of the barcode zone, as shown in the figure below. Stick the label in exact alignment with the centerline of the sample tube in order to prevent scanning errors.

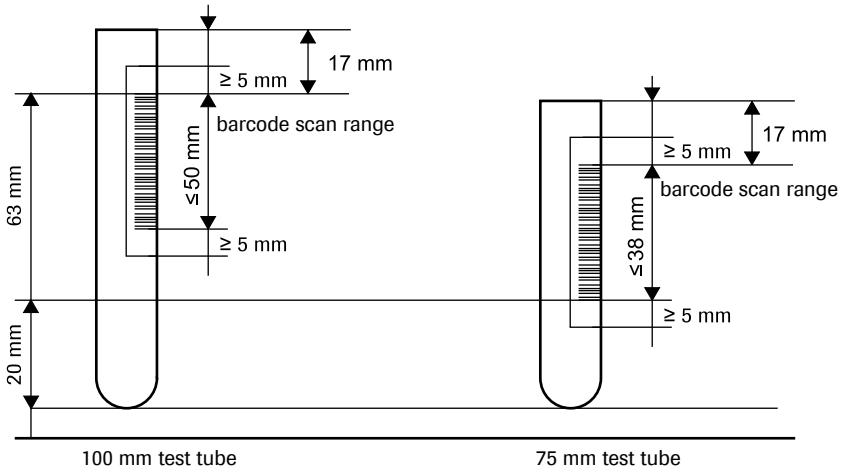

Figure A-56 Scan range of sample barcode reader

Sample cups and tubes

Container	Diameter × length	Comment	Dead volume
Sample tube	16 mm × 100 mm	Use for *cup on tube*	1000 µL
	16 mm × 75 mm	Use for *cup on tube*	1000 µL
Sample tube	13 mm × 100 mm		500 µL
	13 mm × 75 mm		500 µL
Hitachi standard cup directly on the sample rack or on top of a 16 mm diameter tube			100 µL
Hitachi micro cup[(a)]			50 µL
Calibrator/control vial[(b)]			200 µL
Non standard tube	12-16 mm × 73-102 mm	**c** 501	
	13-16 mm × 73-102 mm	**e** 601	
Roche Diagnostics Standard False Bottom Tube[(c)(d)]	13 mm × 75 mm	**c** 501	100 µL
		e 601 with cup adapter	100 µL
Other false bottom tubes[(c)]	12-16 mm × 73-102 mm		

(a) Only to be used on **c** 501 modules. Not to be used for calibrators and controls.
If you use micro cups, you have to select micro cups on **Test Selection** screen as **Sample Cup**. Only in this case the dead volume for micro cups is valid.

(b) Only to be used on the **e** 601modules.

(c) Only one type of false bottom tube (RD or other) is definable.

(d) Sarstedt FBT (60.614.010 or 60.614.015) are equivalent to RD standard FBT.

Cup adapter

For the use of 13 mm tubes Roche Diagnostics requires use of cup adapters.

See *Cup adapters for tubes ≤13 mm* on page A-64.

Standard cups and micro cups

Standard cups and micro cups are too small to hold a barcode label, but it is possible to place them onto 16 mm sample tubes with a barcode label. Both cups can also be placed directly in a rack.

Use only cups certified by Roche Diagnostics. The following original cups are certified by Roche Diagnostics:

- Standard cups
  - Hitachi standard cup
  - **cobas** sample cup (catalog no. 10394246001)
- Micro cups
  - **cobas** sample micro cup (catalog no. 5085713001)

See *Sample containers* on page A-66.

Sample racks

Rack type	Rack color	Display in software	Label on rack
Routine rack	Gray	N00001-N03999	0001-3999
STAT rack	Red	E00001-E00999	S001-S999
Rerun rack[(a)]	Pink	R00001-R00999	R001-R999
Calibrator rack	Black	S00001-S00999	C001-C999
QC rack	White	C00001-C00999	Q001-Q999
Wash rack	Green	W00999	W999
MPA rack			

(a) Rerun racks are used for manual reruns in non-barcode mode only.

Control unit

Computer	Computer with Windows operating system
DVD drive	4.7 GB capacity Applicable data media DVD-R, DVD+R, DVD-RW, DVD+RW See *Preparing a DVD disk* on page B-248.
Monitor	17" TFT color monitor with touch screen system
Input devices	Mouse, touch screen, keyboard
Computer stand	Optional, ergonomic (UL, CE, GS, TÜV)

Data storage capacity

Sample data (routine/STAT)	10 000 samples (including reruns)	
Reaction process data	10 000 tests	
Calibration data	> 1000 tests	
Quality control data	Individual:	100 control materials, 2500 results per **c** module, 2500 results per ISE module, 2500 results per measuring cell (**e** module)
	Cumulative:	100 control materials, 500 points

Core unit cu 150

The following specifications apply to the rack sampler unit of the core unit **cu** 150.

Rack transfer	120 racks/h
Rack loader	30 racks (150 samples) (15 racks / tray + a buffer for 15 racks)
Rack unloader	30 racks (150 samples) (15 racks / tray + a buffer for 15 racks)
Rack rotor	20 positions, definable for STAT and auto QC
Rerun buffer	Up to 20 racks (100 samples) for automatic rerun possible
Reflex testing	Automatic reflex is supported by the system, reflex request to be provided by PSM or LIS

c 501 module

The following specifications apply to the **c** 501 module.

Reaction system (c 501)

Applications	Up to 131 applications: • 117 photometric applications can be registered • 3 electrolyte applications • 8 calculated tests • 3 serum indices
Number of simultaneous tests	Up to 60
Throughput	1000 tests/h (photometric and ISE)
Reaction volume	100-250 µL
Reaction temperature	37 ± 0.1°C (98.6 ± 0.2°F) circulating incubator bath
Reaction disk	Turntable system with 160 reaction cells
Reaction cells	8 segments of 20 reaction cells each (semi-disposable cuvettes for photometry)
Reaction times	3-10 min, in 1-minute steps
Pipetting cycle	6 s
Mixing method	Non-contact ultrasonic mixing

Processing capacity varies depending on measuring conditions, test selection and system configuration

Sampling system (c 501)

Sample types	Serum/plasma, whole blood, urine, CSF, supernatant (hemolysate)
Sample pipetting volume	1.5-35 µL, in 0.1 µL increments
Detection of sample blockages	Pressure sensitive clot detection system
Liquid level sensor	Capacitance sensing technology

For more information, see *Sample cups and tubes* on page A-120.

Reagent system (c 501)

Reagent identification	Automatic identification, automatic placement
Reagent pipetting volume	5-180 µL, in 1 µL increments (5-19 µL: + 20 µL water)
Reagent pipetting timing	3 timings possible (R1: 3.2 s; R2: 90.2 s; R3: 300.2 s)
Reagent storage	Refrigerated compartment for up to 60 reagent cassettes
Reagent bottles	4 different configurations available with up to 3 reagent bottles/cassette: • COBAS INTEGRA cassette: Pos. A: 22.6 mL, Pos. B/C: 11.0 mL • **cobas c** pack: bottles of 20 mL, 40 mL, or 60 mL: (20/40/20 ml, 40/40 ml, 60/20 ml)
Reagent cooling	5-12°C (41-53.6°F)
Remaining reagent volume control	Automatic test countdown with each pipetting
Capacity of cassette disposal	10 reagent cassettes

Photometric measuring system

Light source	Halogen lamp, 12 V / 50 W
Photometer	Multiple wavelength spectrophotometer
Wavelengths	12 wavelengths available: 340, 376, 415, 450, 480, 505, 546, 570, 600, 660, 700, 800 nm
Optical path length	5.6 mm
Optical range	0.0000-3.3000 absorbance
Linearity	Up to 2.5 absorbance
Optical mode	Monochromatic and bichromatic

ISE unit

Applications	Na^+, K^+, Cl^- in serum and urine	
Detection system	Ion-selective electrode system	
Throughput	200 samples/h (corresponding to 600 tests/h)	
Sample pipetting volume	9.7 µL	(normal sample volume)
	6.5 µL	(decreased sample volume for urine, manual rerun only)
Reagent pipetting volume	Dil	348 µL/sample (291 µL is dispensed into the cuvette to get a dilution to 1/31)
	ISE IS	590 µL/sample (measurements in succession) 1180 µL/sample (single measurement)
	KCl	130 µL/sample
Measuring range (serum)	Na^+	80-180 mmol/L
	K^+	1.5-10.0 mmol/L
	Cl^-	60-140 mmol/L
Measuring range (urine)	Na^+	20-250 mmol/L
	K^+	3-100 mmol/L
	Cl^-	20-250 mmol/L
Measuring temperature	37° ± 2°C (98.6° ± 3.6°F)	
	(during operation ± 0.5°C/0.9°F)	
Cycle time	18 s	
Liquid level sensor	Capacitance sensing technology	
Mixing method	Non-contact ultrasonic mixing	

e 601 module

The following specifications apply to the **e** 601 module:

Reaction system (e 601)

Applications	max. 60 heterogeneous immunoassays assays can be installed
Test principals	Competitive tests, sandwich tests and bridging tests
Reaction volume/test	Nominal: approx. 200 µL Real: approx. 160 µL
Throughput	Up to 170 tests/h
Reaction disk	54 positions
	Carryover-free reaction as AssayCups are used only once
Incubator temperature	37 ± 0.3°C (98.6 ± 0.5°F)
Reaction times	9, 18 and 27 min assays
Cycle time	21 s per module, 42 s per channel
Mixing method	Non-invasive vortex mixers

Sampling system (e 601)

Sample types	Serum, plasma, urine
Sample pipetter principle	Conductive disposable tip handling
	Carryover-free pipetting as AssayTips only used once
Sample pipetting volume	Nominal: 10-50 µL
	Real: 8-40 µL
Sample detection	Liquid level detection (LLD) and clot detection
AssayTips	84 tips / magazine
AssayCups	84 cups / magazine
Magazine loading capacity	Up to 12 loaded magazines are possible with 1008 AssayCups and 1008 AssayTips

For more information, see *Sample cups and tubes* on page A-120.

Reagent system (e 601)

Reagent disk temperature	20 ± 3°C (68 ± 5.4°F)
Reagent disk capacity	25 **cobas e** packs in 25 positions
Reagent pipetting volume	Nominal: 40-64 µL/test dependent upon the assay
Microbead consumption	Nominal: 24-40 µL/test dependent upon the assay
ProCell consumption	≤ 2.0 mL/cycle
CleanCell consumption	≤ 2.0 mL/cycle
PreClean consumption	≤ 550 µl/Pre-wash
Reagent volume control	Liquid level detection (LLD)
Positive reagent identification	2-dimensional barcode (PDF417)
Automatic dilution	Available
Evaporation protection	Reagents are automatically opened and closed
Inventory control	Available

*Waste handling (**e** 601)*

Liquid waste handling	Optional: Two waste containers (20 L)
Solid waste handling	Two waste boxes for used AssayTips and AssayCups (max. 672 per box) and the magazine waste section for magazine waste (max. 12 magazines).

ECL measuring system

Measuring method	Integral measuring of an electrochemiluminescence (ECL) signal
Measuring cells	2 individually calibrated ECL measuring cells
Calibration mode	two-point calibration
Auxiliary reagents temperature	28° ± 2°C (82.4 ± 4°F)
Measuring unit temperature	28° ± 0.3°C (82.4 ± 0.5°F)
Pre-wash station temperature	20° ± 1°C (68 ± 2°F)

Operation B

7 *Software basics* B-3
8 *Daily operation* B-31
9 *Orders and results* B-81
10 *Reagents* B-107
11 *Calibration* B-157
12 *QC* B-199
13 *Extended operation* B-235
14 *Configuration* B-253

Software basics

This chapter is an introduction to the basic operational procedures for the **cobas** 6000 analyzer series.

In this chapter

Chapter 7

General description of the user interface B-5
Status line B-6
Status B-6
Guidance prompt B-7
Menu tabs B-7
List boxes B-8
Text boxes B-8
Options B-8
Check boxes B-9
Lists B-9
Buttons B-10
Standard buttons B-11
Global buttons B-12
Windows B-12
Screen accessibility B-12
Shortcut Keys B-13
The help system of the instrument B-15
About F1 Help B-15
The F1 Help window B-16
Button bar B-17
Navigation pane B-18
Topic area B-19
Searching for information in the help system B-19
Search options and recommendations B-21
Using favorites B-22
Printing F1 Help topics B-23
About Direct Help B-23

Main menus B-24
System Overview B-24
Workplace B-25
Reagent B-26
Calibration B-27
QC B-28
Utility B-29

General description of the user interface

The screen representations shown in this chapter and throughout this manual are for illustrative purposes only. The screens do not necessarily show valid results.

The screen of the PC is divided into different sections. Some of these sections do not change and some differ according to the currently active function. Following is an example of a screen showing the different areas.

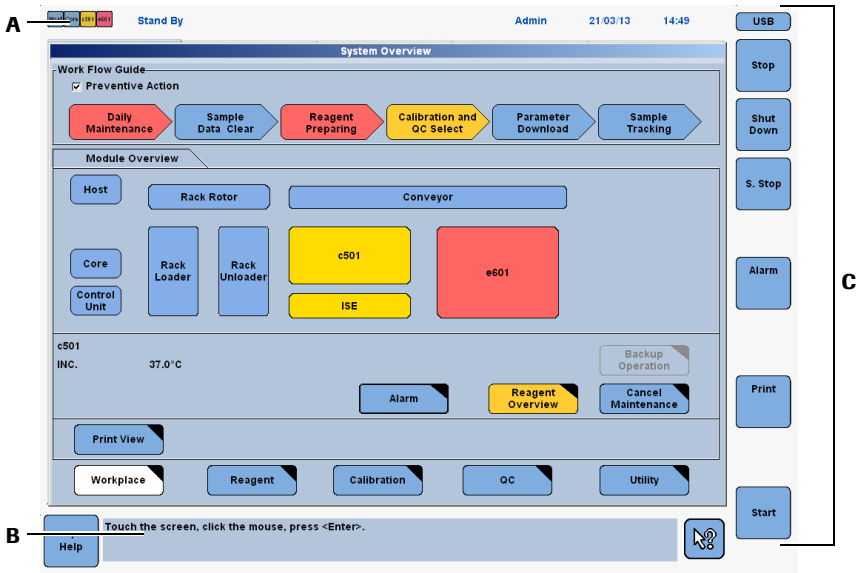

A Status line
B Guidance prompt
C Global buttons

Figure B-1 Screen configuration

Status line

The status line appears across the top of each screen.

Figure B-2 Status line

The status line displays the current operational mode, operator ID, date and time, and the time remaining when performing maintenance. The icon on the left displays the current statuses of the system modules. Touching this icon displays the **System Overview** screen with information of the selected item/module.

Status

Status colors and symbols inform you about the status of modules and reagents.

Coding The general meaning of the colors and symbols is as follows:

- Module not in **Standby** mode (e.g., **Maintenance** mode, **Operation** mode)
- Module in **Standby** mode
- The remaining volume of a reagent cassette or system reagent is lower than the specified purple reagent alarm level
- Action needed soon (e.g., because a maintenance action is due or the remaining volume of a reagent cassette or system reagent is lower than the specified yellow reagent alarm level)
- Reagent reloading is possible on the **e** 601 (reagent reloading function)
- Action needed immediately (e.g., because of *S.Stop*, *Stop*, or *E.Stop*, because there is no reagent for a test, or a maintenance action is overdue)
- Module is service masked (\)
- Module is masked (X)
- Module is inactivated (**Utility** > **Module Set** > **Module Setting** window)
- Module is powered off

Examples

The host is online

The **c** 501 module is in operating mode.

The remaining number of tests on the **c** 501 module is below the yellow alarm level.

The **c** 501 module is masked.

The reagent for at least one test on the **e** 601 module is not on board or empty.

Guidance prompt

The guidance prompt is shown in the lower left of each screen.

Figure B-3 Guidance prompt

In this area, the software prompts you as to what kind of information to type and what format to use when typing that information. The guidance prompt may also tell what action to take, such as touching a button or pressing a key. For example, “Touch screen or press <Enter>”. Each prompt is specific to the location of the cursor.

Menu tabs

The menu tabs are displayed below the status line.

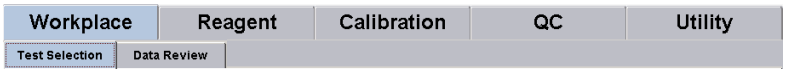

Figure B-4 Menu tabs

The menu tabs are used to select screens and windows that are grouped together and perform related tasks. The menu tabs are accessible from every screen, except the global screens. This makes the software navigation within the menus and between menus very easy.

The menu tabs are only for the 5 menus: **Workplace**, **Reagent**, **Calibration**, **QC** and **Utility**. The menu tabs can be selected by touchscreen, mouse or keyboard.

List boxes

List boxes display a list of choices. If there are more choices than can fit in the box, a scroll bar is displayed.

1. Touchscreen: Touch the desired area within the list box on the screen. If a scroll bar is displayed next to the list box, touch the scroll bar above or below the current display position, or touch the arrows on the scroll bar to move up or down the list.
2. Keyboard: The <Arrow> keys can be used to move quickly through the list. Press the <Arrow> key that points in the direction you want to move. The currently selected choice is indicated by the selection cursor, which appears as a highlight. The Home, End, Page Up and Page Down keys can also be used to move through the list. When the desired item is highlighted, press <Enter>.

Text boxes

Text boxes are used to type information. When you move to an empty text box, the box is highlighted.

1. Touchscreen: Move to a text box by touching it on the screen. The text box highlights when you touch it.
2. Keyboard: Move to a text box by pressing the <Tab> key. The text box highlights when you move to it.

Press the <Enter> key to accept information typed. The cursor then moves to the next field.

Options

Options are used to select a particular function. Sometimes when an option is selected, other fields become available.

An option is selected when a black circle is displayed within the white circle for the option. Only one option can be selected at a time.

1. Touchscreen: Move to the option by touching it on the screen. The option displays a black circle within the white circle when you touch the option.
2. Keyboard: Move to the option by pressing the <Tab> key or press the letter which is underlined. If multiple options are available, the up and down arrow keys move to the different options.

Check boxes

Check boxes are used to select a particular function. Sometimes when an option is selected, additional fields become available. Multiple check boxes can be selected in the same area of the screen.

1. Touchscreen: Move to the check box by touching it on the screen. A check mark appears in the check box when it is selected. When the check box is blank, it is not selected.
2. Keyboard: Move to the check box by pressing the <Tab> key or press the letter which is underlined. If multiple check boxes are available, the up and down arrow keys move to the different check boxes.

Lists

Lists provide data structured in lines and columns.

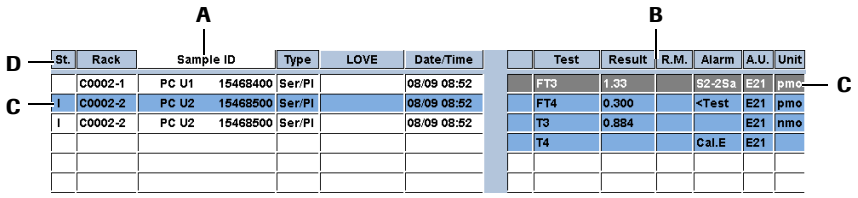

A Highlighted column head indicates that the list is sorted by this column

B Column divider

C Activated line (highlighted)

D List heading

Figure B-5 Example of lists

One or more lines can be activated for further operations. The activated lines are highlighted.

Some lists can be sorted by selecting the corresponding column head. A white background indicates that the list is sorted by this column.

The column width can be adjusted by selecting the corresponding column divider and dragging it to the left or right.

Incomplete content displayed due to a too narrow column width

If the column width is set too small some characters can be hidden.

Buttons

Buttons are used for execution of functions, confirmation of entries and selections, and displaying pop-up windows. The available buttons depend on the menu or tab that is active. For example, the **Demographics** button on the **Workplace** > **Test Selection** screen displays a window that is used for the entry of demographic patient information.

The black triangle in the upper right-hand corner of a button indicates that touching this button displays another window. The black triangle in the lower left corner of a button indicates that touching this button performs the specified function and closes the window.

If a button is shaded, the button is not available in the current mode.

1. Touchscreen: Choose a button by touching it on the screen.
2. Keyboard: Press the <Arrow> keys, <Tab> key or press the letter which is underlined to highlight a button. Press the <Enter> key to initiate the action.

   In addition, each software button on screen or window has an action key: the letter underlined in the button name (e.g., the action key for "OK" is O). While pressing the <Alt> key, press the letter key corresponding to the button to activate the button.

Standard buttons

The following buttons are used throughout the software. These buttons are explained below and will not be explained again with each individual screen.

OK Touch this button to accept the changes and entries made on a window and to close the window.

Cancel Touch this button to close the window without saving the changes and entries made on a window

Yes Touch this button to accept the changes made on a window, execute the action of the window (e.g., Delete) and close the window.

No Touch this button to close the window without saving the changes made on a window or without executing the function of the window (e.g., Delete).

Close Touch this button to close the window.

Save When changes have been made, this button turns yellow. Touch this button to save any changes made to the screen/window currently displayed.

Update When changes have been made, this button turns yellow. Touch this button to update any changes made to the screen/window currently displayed.

Execute Touch this button to accept the changes made on a window, to execute the action of the window and to close the window.

Page buttons The **Utility** > **System** screen displays page buttons that can be used to display additional buttons to display new screens. These page buttons are numbered (X/4), to indicate which page you are on.

The page buttons only change the displayed buttons and not the entire appearance of the screen.

Global buttons

Use the global buttons to display screens that are used for specific functions. The global buttons are accessible from every screen and appear on the right side of the screen (except for the **Help** button which appears on in the lower left corner of the screen). The global buttons include: **USB**, **Stop**, **Shut down**, **S. Stop**, **Alarm**, **Print**, **Start** and **Help**. The **Stop, S. Stop** and **Start** buttons are also the system control buttons. The global buttons can be selected by touchscreen, mouse or keyboard.

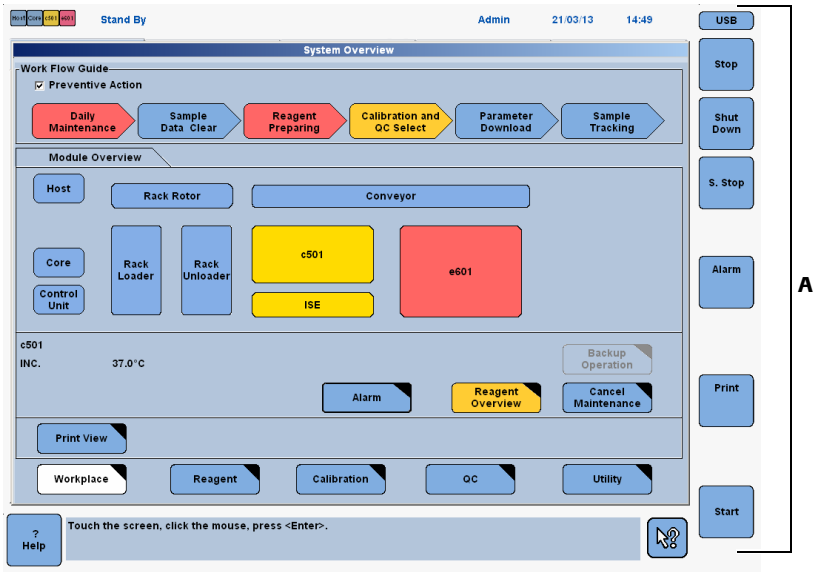

A Global buttons

Figure B-6 Global buttons

Windows

Windows contain additional information that pops up over existing screens/windows.

Windows function similar to screens. Information on a window can be entered or edited through list boxes, text boxes, options and check boxes. Action buttons are also available.

Confirmation window

Many functions require confirmation prior to their execution (e.g., **Delete**).

Confirmation windows are used to confirm these functions. Touch **Yes** to confirm the function and to close the confirmation window, or touch **No** to close the confirmation window without carrying out the function.

Screen accessibility

Some screens are not accessible with the operator level logon, or can be viewed with a supervisor level logon but not edited. Some fields are viewed only at the administrator level logon.

Shortcut Keys

All functions can be initiated via the keyboard or the touchscreen for selection of screen items.

All special keys and their functions are described below.

Shortcut	Description
<F1>	Use this key to display the Online Help.
<F2>	Use this key to display the **Start Conditions** screen.
<F3>	Use this key to display the **Sample Stop** screen.
<F4>	Use this key to display the **Stop** screen.
<F5>	Use this key to display the **Workplace** menu. This key does not work if you are in a global screen.
<F6>	Use this key to display the **Reagent** menu. This key does not work if you are in a global screen.
<F7>	Use this key to display the **Calibration** menu. This key does not work if you are in a global screen.
<F8>	Use this key to display the **QC** menu. This key does not work if you are in a global screen.
<F9>	Use this key to display the **Utility** menu. This key does not work if you are in a global screen.
<F11>	Use this key to display the **Alarm** screen.
<F12>	Use this key to display the **System Overview** screen.
<Print/Print Screen>	Use this key to display the **Print** screen. Press <Shift + Print Screen> simultaneously to print the current screen.
<Scroll Lock>	Use this key to display the **Cancel Print** window.
<Pause/Break>	Use this key to display the **Logoff** screen.
<Esc>	Use this key to exit a window or global screen.
<Tab>	Use this key to move to the next field in a window or screen. To go from a field to the previous one, press <Shift + Tab> simultaneously.
<Enter>	Use this key to confirm an entry.
<Shift>	Simultaneously pressing <Shift> and a character key generates a capital letter or a special character, for example <Shift> + <, generates the character “>”.
<Backspace>	Use this key to delete a character to the left of the cursor.
<Space>	Use this key to generate a space.

Table B-1 Shortcut Keys (Sheet 1 of 2)

Shortcut	Description
<Delete>	Use this key to delete a character to the right of the cursor.
<Home>	Use this key to place the cursor at the beginning of a list or text box.
<End>	Use this key to place the cursor at the end of a list.
<Page Up>	Use this key to scroll upward in a list, one page at a time.
<Page Down>	Use this key to scroll downward in a list, one page at a time.
<Arrow>	Use these keys to move the cursor to the right, left, upwards or downwards within a text box.
<Caps Lock>	Use this key to lock the letter keys into the upper case mode.
<Num Lock>	Use the numerical key pad for entry of numbers and mathematical operators such as +, -, /, *.

Table B-1 Shortcut Keys (Sheet 2 of 2)

The help system of the instrument

The user interface of the **cobas** 6000 instrument has a context-sensitive online help system to support you in operating the instrument.

Context-sensitive means that the help system always displays information related to the current screen or software element. Therefore, the help system offers a quick and convenient way to find information.

The instrument software offers two help features:

- F1 Help
- Direct Help (tooltips)

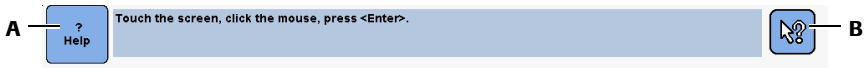

A F1 Help button **B** Direct Help button

Figure B-7 Online help buttons

For more information on the help system, see:
About F1 Help on page B-15
Searching for information in the help system on page B-19
Printing F1 Help topics on page B-23
About Direct Help on page B-23

About F1 Help

The **F1 Help** feature displays information related to the current screen. Hypertext links guide you to additional information and procedures related to this screen.

The name F1 Help results from the fact that this help is also available by pressing the F1 key.

Operator's Manual included in the F1 Help system

The Operator's Manual is included in the F1 Help system. This allows you to search for information throughout the software reference and the manual. All cross-references are implemented as hyperlinks.

► To display the F1 Help feature for the current screen

1. Open the screen or window for which you want detailed information.
2. Choose the **Help** button in the bottom left corner of the screen or press <F1> on the keyboard.

   The **cobas** 6000 help opens displaying the desired help information.

■

Videos in the F1 Help

The F1 Help is equipped with a number of video clips which show different maintenance tasks.

The video clips are only available if the instrument is in standby.

For information on the instrument status, see *Instrument status* on page B-237.

The F1 Help window

The F1 Help window comprises three main areas:

- Button bar
- Navigation pane
- Topic area

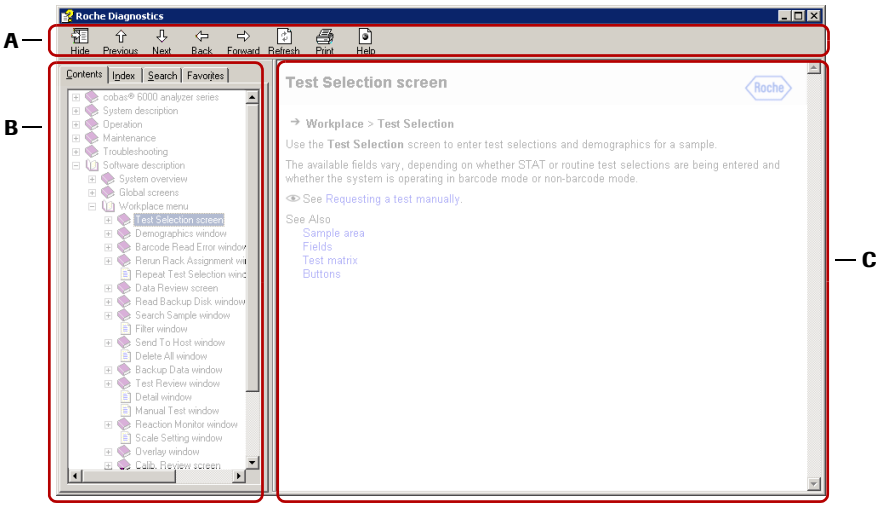

A Button bar
B Navigation pane
C Topic area

Figure B-8 Areas of the F1 Help window (example screenshot from the English version)

Button bar

The buttons at the top of the help window provide the following functions:

Hide/Show		Allows you to show or hide the navigation pane. This feature provides more space in the topics pane, which may be desired for displaying large figures.
Previous/Next		Use these buttons to open the topic above or below the current topic. If there is no topic to view above, the **Previous** button is unavailable.
Back/Forward		Use these buttons to backtrack through the topics you have previously reviewed, in the order in which you viewed them. The record of topics viewed is deleted each time you exit the F1 Help.
Refresh		This is a standard function of Internet browsers for refreshing the screen. You do not need this button for displaying F1 Help.
Print		Prints the topic currently displayed in the topic area.
Help		Directs you to information about the help system (*help on help*).

Navigation pane

The navigation pane appears to the left of the help window. There are four tabs available at the top of the pane: **Contents**, **Index**, **Search**, and **Favorites**.

- The **Contents** tab uses book and page symbols to display the contents of the F1 Help and remains synchronized with the topic displayed in the topic area.
- The **Index** tab provides access to the help index.
- The **Search** tab provides access to a full-text search feature.
- The **Favorites** tab allows organizing important topics with your personal bookmarks.

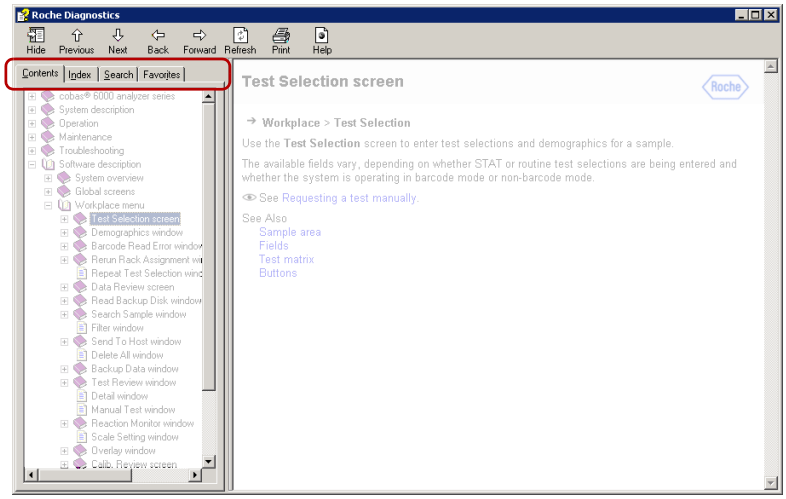

Figure B-9 The tabs in the Navigation pane

For information on the **Contents**, **Index**, **Search**, and **Favorites** tabs, see:
Searching for information in the help system on page B-19
Using favorites on page B-22

Topic area

Help topics appear in the area to the right of the navigation pane. The topic area comprises the description related to the topic selected in the navigation pane.

If the topic extends beyond the window, scrollbars allow you to view the rest of the topic.

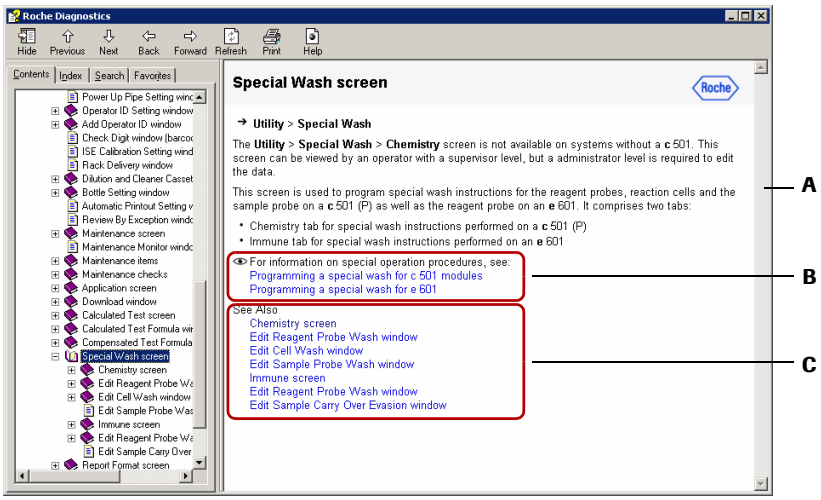

A Scrollbar (if necessary)
B Links
C Related topics at the end of the topic

Figure B-10 Topic area (example screenshot from the English version)

Related topics At the end of a topic, all subtopics to the current topic are listed.

Alternatively, you can navigate to subtopics using the **Next** button or using the **Contents** tab.

Links Cross-references to associated topics are indicated by blue text. When you hover over a link, the mouse pointer changes to a hand icon.

For information on the symbols used in the topic area, see *Symbols and abbreviations* on page 9.

Searching for information in the help system

There are various methods of finding the desired information in the F1 Help. Select your preferred method.

- The **Contents** tab displays the structure and contents of the **cobas** 6000 help system allowing you to navigate to the desired location.
- The **Index** tab displays a list of predefined keywords based on the topic titles and words or phrases in the help system.
- The **Search** tab allows you to perform a full-text search in the help system.

► To use the Contents tab

1 Choose the **Help** icon in the lower left corner of the screen or press <F1>.

The **Help** window displays information related to the current screen of the user interface.

2 If you require information about another topic, use the navigation pane on the left:

- Double-click on a book symbol to further expand the contents structure (or click on the plus symbol). The structure in the navigation pane expands showing the available topics.
- Click on a book symbol or a page symbol to display the corresponding topic.
- Use the scrollbar of the navigation pane to scroll up and down within the topics of the help system.

■

► To use the Index tab

1 Choose the **Help** icon in the lower left corner of the screen or press <F1>.

The **Help** window is displays information related to the current screen of the user interface.

2 Choose the **Index** tab to display the list of index entries.

3 Type the desired index entry or scroll through the index list. As soon as you start typing the index entry, the entries that most closely match the text that you type are displayed in the index list.

4 When you have found the desired index entry, double-click the entry or select the entry followed by **Display** to display the topic in the topic area.

■

► To use the Search tab

1 Choose the **Help** icon in the lower left corner of the screen or press <F1>.

The **Help** window is displays information related to the current screen of the user interface.

2 Choose the **Search** tab.

3 In the text box, type the search term(s) you want to find.

4 Choose the **List Topics** button to show the search results.

5 The bottom list displays the titles of topics that match the search term(s).

6 Double-click a topic title to display this topic in the topic area.

Or: Select the topic title and choose the **Display** button.

See *Search options and recommendations* on page B-21.

■

Search options and recommendations

Recommendations for better search results

The number of search results is displayed above the result list (**Found: xx**).

Problem	Recommendation
Too many search results	1. Select the **Search titles only** check box. 2. Deselect the **Match similar words** check box. 3. Select the **Search previous results** check box and enter a new search term(s) that is associated with your desired information. 4. Connect two or more search terms with **AND**, **OR**, **NEAR**, or **NOT** (see arrow button on the right of the text box).
The desired information is not contained in the search results	1. Select the **Match similar words** check box. 2. Deselect the **Search previous results** and the **Search titles only** check boxes. 3. Maybe you are using terms that are different from the terms used in the help system. Use the **Index** tab for your search.

Table B-2 Recommendations

Search options

The following table describes the search options in the F1 Help:

Search option	Explanation
AND	Use this option to join words or phrases when both (or all) terms must appear in the search results.
OR	Use this option to join synonymous or related terms when either (or both) of the terms must appear in the search results.
NEAR	Use this option to find words within 10 words of each other.
NOT	Use this option to exclude a particular word or combination of words from your search results.
Search previous results	Select this check box to limit the search results and search through your results list from previous search. Deselect this check box if you want to search through all of the files in the Online Help.
Match similar words	Select this check box to find similar words and minor grammatical variations for the phrase you search.
Search titles only	Select this check box to search titles only. Deselect this check box for a full text search.

Table B-3 Search options

Using favorites

You can add a favorite, also called bookmark, to Online Help topics that you want to visit again. The favorites work similar to the favorites in your web browser.

► To add a favorite

1 In the F1 Help, search for or navigate to the desired topic.

Figure B-11 **Favorites** tab (example screenshot from the English version)

2 Choose the **Favorites** tab to display the list of favorites.

The topic title is displayed in the **Current Topic** text box.

3 To rename the topic, enter another name.

4 Choose the **Add** button. The new favorite is inserted in alphanumeric order.

Any time you want to open that topic again, choose the **Favorites** tab and then select it from the **Topics** list.

Organizing favorites by prefixes

To organize a number of favorites, we recommend using a numeric prefix at least for each main menu (e.g., 1 = **Workplace**, 2 = **Reagent**, …). All topics from the **Workplace** menu will then appear together under the prefix 1.

■

► To rename a favorite

1 In the **Favorites** tab, select the desired favorite.

2 Right-click on the favorite name and select **Rename**.

3 Type the new name and press <Enter>.

■

Printing F1 Help topics

You may find it useful to print a topic from the **cobas** 6000 Online Help.

► **To print a help topic**

1 In the F1 Help, search for or navigate to the desired topic.

2 To print the current topic, choose the **Print** button.

3 Check the printer settings and choose **Print** to print the selected topic.

■

About Direct Help

The **Direct Help** feature displays brief information related to a single software element, such as a button or field. Use this help feature if you only require a tooltip about an element.

The Direct Help can only provide short tooltips

If you require more information about an element, please press <F1> to open the F1 Help system.

► **To call-up the Direct Help feature for a single element**

1 Touch (or click) the **Direct Help** icon in the bottom right corner of the screen.

2 Wait until a question mark (?) is displayed next to the pointer.

3 Touch the screen element for which you want detailed information. A tooltip (pop-up window) is displayed containing information about this screen element.

4 Touch any part of the screen to close the pop-up.

■

Main menus

The graphical user interface used by the control unit consists of 6 main screens, **System Overview**, **Workplace**, **Reagent**, **Calibration**, **QC** and **Utility**, and 6 global screens. Through these screens all instrument functions are controlled.

Access to some screens, especially those of the **Utility** menu, is confined to the access level of the user. For this reason, the screen may not appear exactly as shown here.

System Overview

The **System Overview** screen has a central role within the **cobas** 6000 software. From here the user has an overview of the whole system at any given time. It displays the status of each module, and the modules can be prepared for daily routine operation.

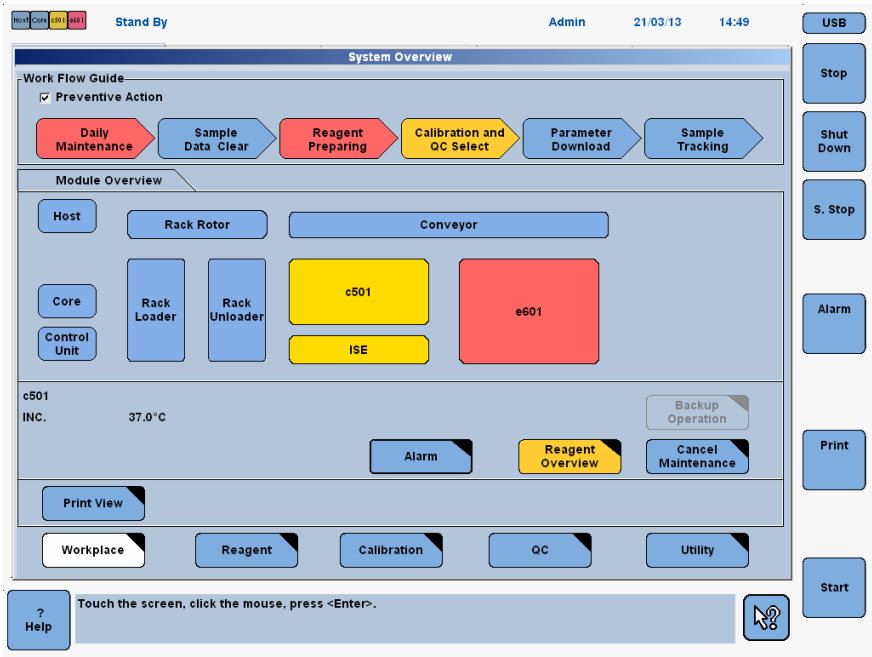

Figure B-12 System Overview screen

For more information, see *System Overview screen* on page B-39.

Workplace

The **Workplace** menu consists of three screens: **Test Selection**, **Data Review** and **Calib Review**. Use the **Test Selection** screen to make test selections, specify patient demographics, and assign patient IDs and rack positions to samples. Use the **Data Review** screen to review, backup, edit, delete and send data to the Host. Use the **Calib Review** screen to review the status of the calibrators that are currently processing and the status of the calibrations.

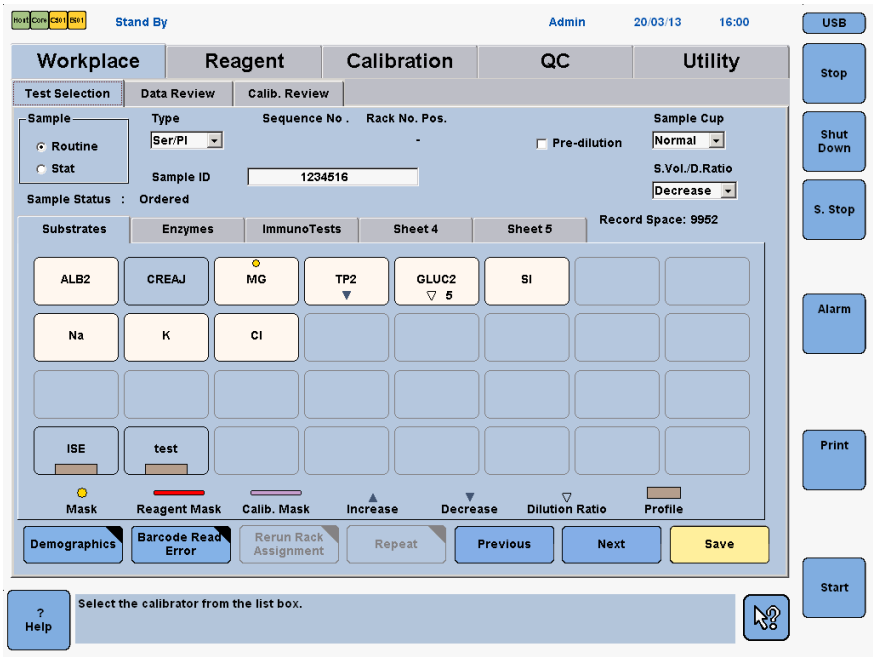

Figure B-13 Workplace menu

For more information, see:
Test Selection screen on page B-85
Data Review screen on page B-93
Calib. Review screen on page B-101

Reagent

The **Reagent** menu consists of two screens: **Setting** and **Status**. These screens are used to view detailed reagent information and to perform operation related to reagent management.

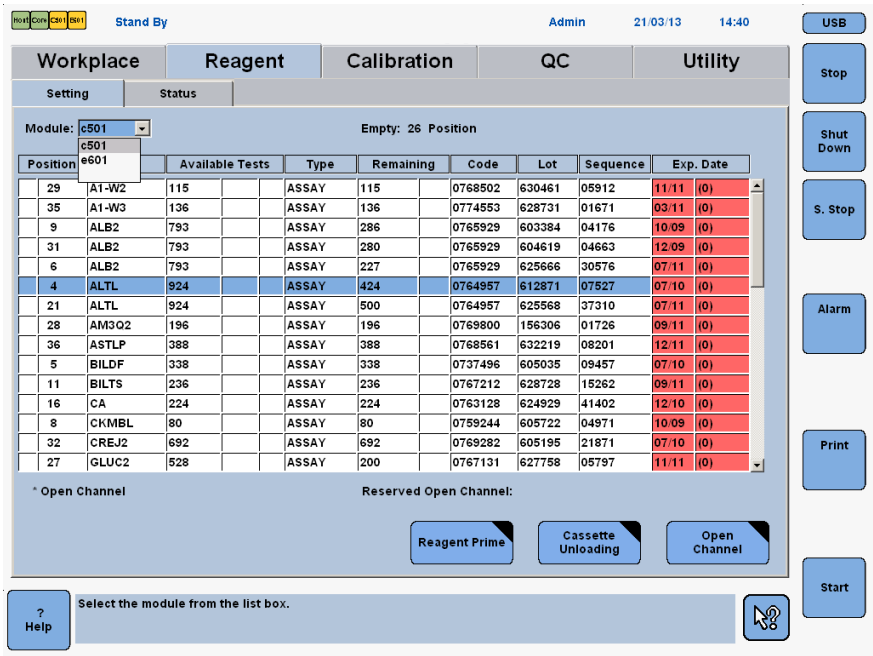

Figure B-14 Reagent menu

For more information, see:
Reagent Setting screen on page B-130
Reagent Status screen on page B-135

Calibration

The **Calibration** menu consists of three screens: **Status**, **Calibrator** and **Install**. These screens are used to request calibrations, define calibrators and view the reaction curves for calibrators installed on the system.

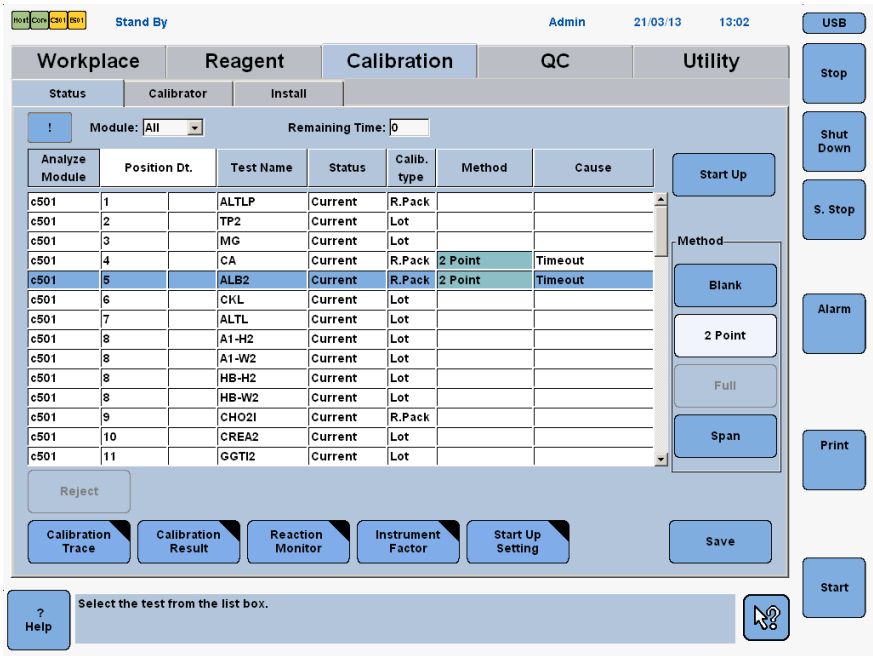

Figure B-15 Calibration menu

For more information, see:
Calibration Status screen on page B-170
Calibration Install screen on page B-185
Calibration Calibrator screen on page B-182

QC

The **QC** menu consists of 6 screens: **Status**, **Run Status**, **Individual**, **Cumulative**, **Control**, and **Install**. Use these screens to install, view and edit controls, and to manage quality control results.

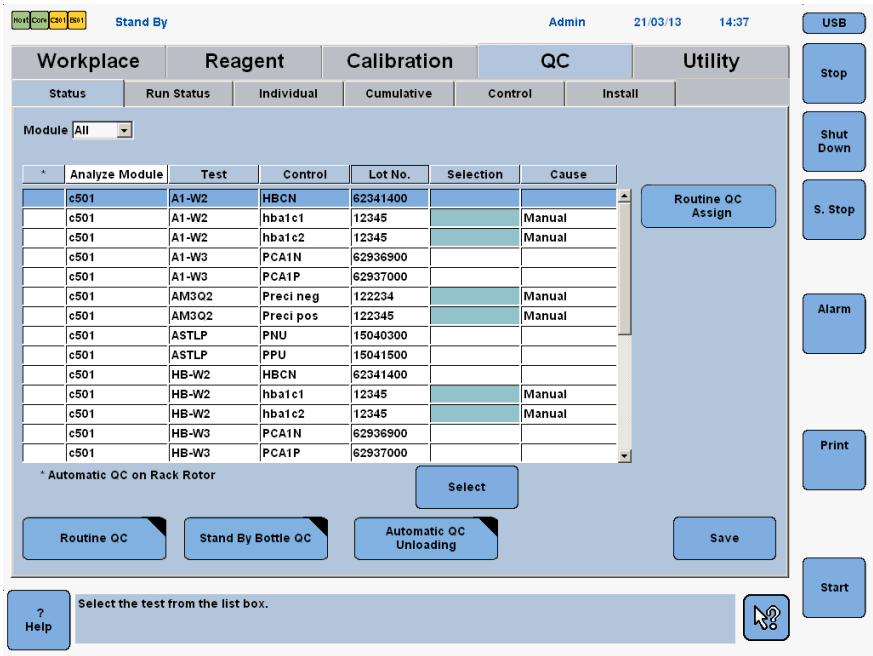

Figure B-16 QC menu

For more information, see:
QC Status screen on page B-206
QC Run Status screen on page B-211
QC Individual screen on page B-213
QC Cumulative screen on page B-221
QC Control screen on page B-222
QC Install screen on page B-224

Utility

The **Utility** menu consists of 7 screens: **System, Maintenance**, **Application**, **Calculated Test**, **Special Wash**, **Report Format**, and **Module Set**. These screens are used to enter system parameters, application parameters, maintenance settings and system settings.

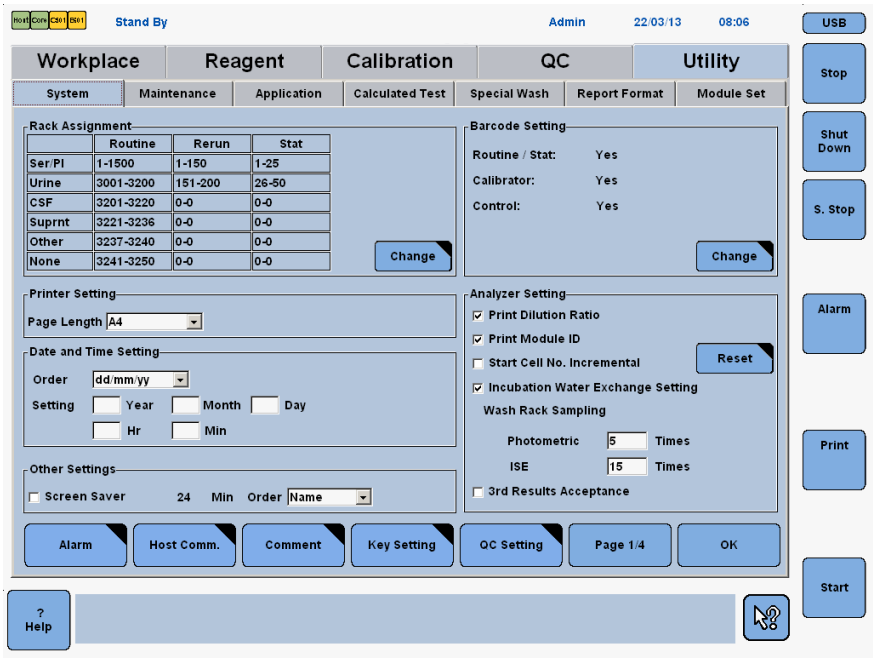

Figure B-17 Utility menu

For more information, see:
System configuration on page B-281
Performing maintenance items or pipes on page C-13
Application on page B-255
Calculated Tests (c 501) on page B-295
Special Wash on page B-301
Report Format on page B-310
Module Set on page B-291

Daily operation

This chapter provides a description of the everyday tasks which are required for running the **cobas** 6000 analyzer. Common procedures that are performed as part of the daily workflow are also described here.

In this chapter

Chapter 8

Overview B-33
Starting the analyzer B-34
Starting inspection B-34
Start-up B-35
Automatic start-up B-36
Manual start-up B-37
Check system alarms B-38
System Overview screen B-39
Color scheme of the System Overview screen B-41
Work Flow Guide B-44
Preventive action B-44
Function of the Work Flow Guide elements B-45
Preroutine operation B-47
Daily Maintenance button B-47
Sample Data Clear button B-48
Reagent Preparing button B-48
c 501 – ISE unit B-49
c 501 – photometric unit B-53
e 601 ..... B-54
Calibration and QC Select button B-55
Requesting calibration and QC and printing load lists B-56
Measuring calibrators and controls B-60
Validating calibration and QC results B-61
Parameter Download button B-62
Sample Tracking button B-64

Routine operation B-65
Processing routine samples B-66
Test selection B-66
Loading routine samples B-67
Starting the measurement B-68
Processing STAT samples B-69
Test selection B-69
Loading STAT samples B-70
Processing reruns B-71
Reruns with diluted samples B-72
Prediluted samples B-73
Checking results B-74
Sample tracking B-74
Printing sample information B-76
Sampling Stop B-77
Shutting down the analyzer B-78
Maintenance before shutdown B-78
Analyzer shutdown B-78
Checks after shutdown B-80

Overview

Pay attention to the safety precautions!

Before operating the instrument, observe the general safety information.

See *General safety information* on page A-3.

Daily operation encompasses the routine tasks that are required to prepare the analyzer, analyze samples, and maintain the analyzer. The layout of the **System Overview** screen gives the operator an intuitive guide for the tasks required for routine operation.

The following diagram gives an overview of daily operation.

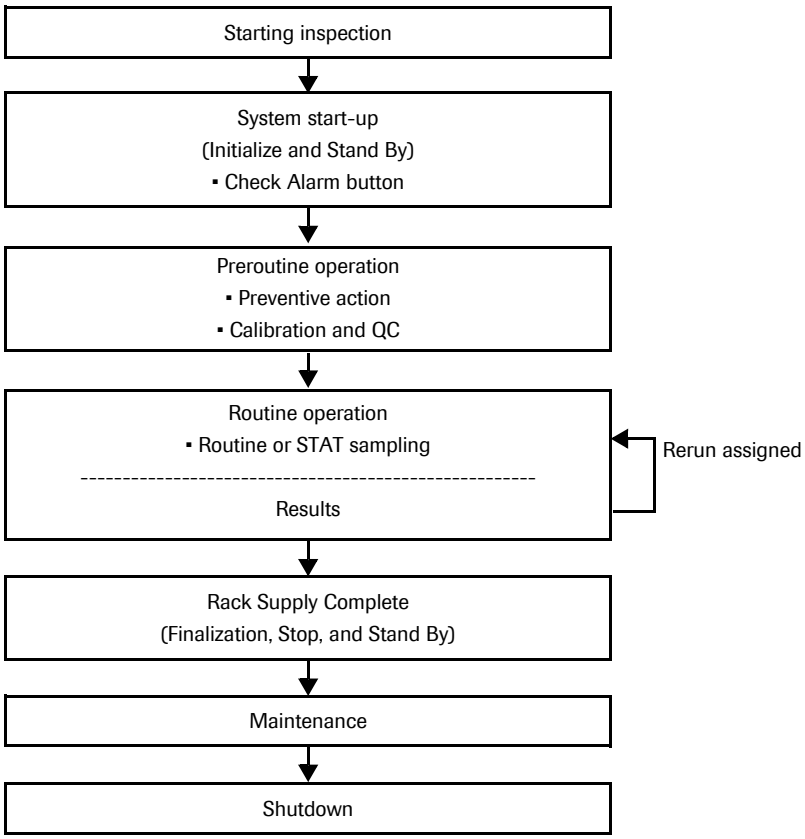

Figure B-18 Workflow diagram

Starting the analyzer

Before you can start routine operation, you must prepare the analyzer for operation.

For more information, see:
Work Flow Guide on page B-44
Preventive action on page B-44

Starting inspection

Before start-up, it is important that the following conditions of the analyzer are checked. Take the necessary action if a condition is not as listed below.

Control unit

- ☐ There is no floppy disk; CD or DVD in the corresponding drive.
- ☐ There is sufficient paper in the printer.

Core unit

- ☐ The water supply is switched on.
- ☐ Container for high concentrated waste is empty, clean and placed in the correct position.
  Dispose of the contents of the waste tank according to your laboratory's biohazardous waste disposal regulations.
- ☐ All connections and fittings of tubes and containers are connected properly and leak-proof.
- ☐ There are no racks on the rack loader, unloader, rack rotor, or conveyor line.
  Dispose of samples, calibrators, and QC material according to local regulations.

Analytic modules

- ☐ All surfaces are clean and clear of loose articles.
- ☐ No tubing is pinched or bent.
- ☐ Syringes are not leaking.
- ☐ Auxiliary reagents (cleaning solutions) required for start-up pipes are loaded.

***c** 501 module – ISE unit*

- ☐ All electrode cables and tubings are correctly connected. Tubing is not leaking.

***c** 501 module – photometric unit*

- ☐ All reagent cassettes are removed from the cassette disposal.
  Dispose of the reagent cassettes from the cassette disposal according to local regulations.
- ☐ Top cover of the **c** 501 module is closed and locked.

***e** 601 module*

- ☐ The amount of ProbeWash solution (near the reagent probe) is sufficient.
- ☐ The magazine door and drawer are closed.
- ☐ Syringes are not leaking.

If any problems arise, refer to the module-specific maintenance and troubleshooting chapters.

If the analyzer has been set for automatic start-up, it is important that the above checks are done as part of the maintenance at the end of the previous working session; otherwise, problems may occur.

Start-up

The analyzer can be started manually or automatically. The analyzer (**c** 501, **e** 601, and control unit) performs initialization and then enters standby mode (time approximately 12 min).

Automatically starting up the analyzer allows the analyzer to perform initialization before the beginning of a working session. When the operator arrives, the analyzer is ready for operation. To automatically start up the analyzer you have to do two things:

1. Configure the **Power Up pipe** function (set a wake-up time).
2. Put the analyzer in sleep mode at the end of the previous working session.

For more information, see:
Power Up Pipe function on page C-15
Analyzer shutdown on page B-78

Preparatory maintenance

Certain preparatory maintenance items are recommended to be executed after each analyzer start-up and before the start of analysis. To automate this preparatory maintenance use maintenance pipes in connection with the **Power Up pipe** or **Start Up pipe** functions.

For more information, see:
Maintenance pipes on page C-10
Daily maintenance on page C-24
Recommended maintenance pipes on page C-32

If you do not use maintenance pipes in connection with the **Power Up pipe** or **Start Up pipe** functions, you have to execute the maintenance items manually.

See *Performing maintenance items or pipes* on page C-13.

Visual checks

Even though you can automatically execute preparatory maintenance pipes using the **Power Up pipe** or **Start Up pipe** functions, some maintenance items require visual checks by the operator. Be sure to perform these checks prior to routine operation.

See *Visual checks at start-up* on page C-24.

Automatic start-up

The analyzer can be programmed to start up automatically.

If the analyzer was put in sleep mode at the end of the previous working session and a wake-up time was set, the analyzer starts up automatically at the set time. While the analyzer is performing initialization, the **Logon** screen is displayed.

For information, see:
Power Up Pipe function on page C-15
Analyzer shutdown on page B-78

► To automatically start up the analyzer

1 If the **Alarm** button on the right of the screen is flashing, check the **Alarm** screen for important system notifications.

See *To review the Alarm screen* on page B-38.

If the **Alarm** button is not flashing, go to step 2.

Figure B-19 **Logon** screen

2 Enter your **Operator ID** and **Password** to log on.

Passwords are case sensitive.

3 Choose **OK** to gain access to the software and begin operation. When initialization is completed, the analyzer goes into standby.

■

Manual start-up

If no automatic start-up has been set, use the following procedure to start up the analyzer.

If the logon mode is not activated (**Utility** > **System** (**Page 3/4**) > **Operator ID**), the software starts up displaying the **System Overview** screen.

► To manually start up the analyzer

1 Switch on the operation power switch, located on the left side of the rack sampler unit.

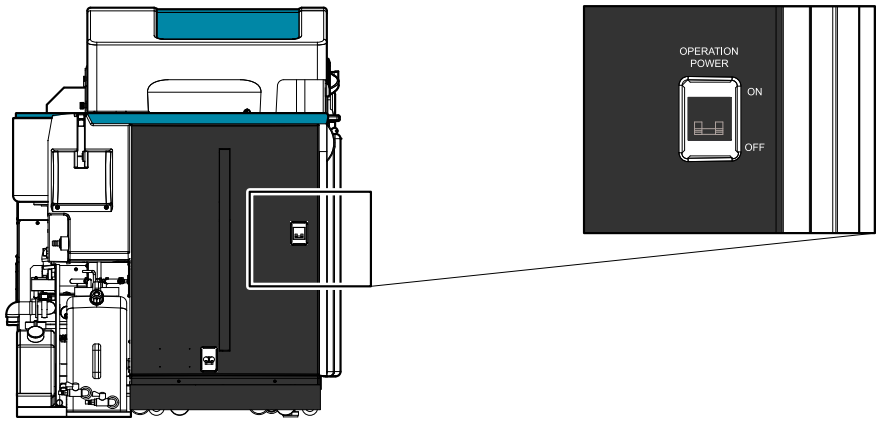

Figure B-20 Operation power switch

2 Switch on each power switch of the computer, printer, and monitor.

The analyzer starts the initialization routine (time for **c** 501, **e** 601, and control unit approximately 12 min).

While the analyzer is performing initialization the **Logon** screen is displayed.

3 Enter your **Operator ID** logon and **Password** to log on.

4 Choose **OK** to gain access to the software and begin operation. When initialization is completed, the analyzer goes into standby.

■

Check system alarms

If an alarm was issued, the **Alarm** global button flashes. In this case, it is necessary to open the **Alarm** screen to view the alarm. The **Alarm** screen identifies any system alarm conditions.

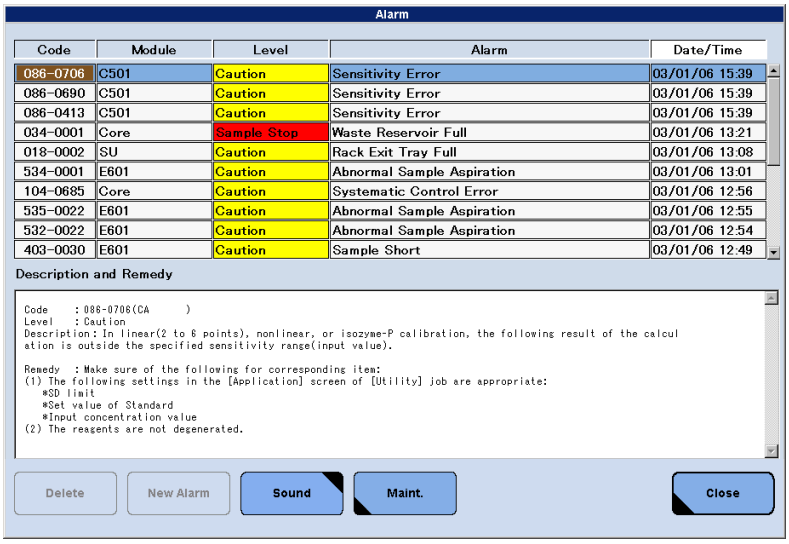

Figure B-21 **Alarm** screen

► To review the Alarm screen

1. Choose **Alarm** (global button) to display the **Alarm** screen.
2. Select each alarm to view the description and remedies (displayed in the lower half of the screen).
3. Correct any alarm conditions by following the remedies.

   If any problems arise, refer to the module specific troubleshooting chapter.
4. Choose **Close** to close the **Alarm** screen.

■

System Overview screen

The **System Overview** screen has a central role within the **cobas** 6000 software. The operator has an overview of the whole system at any given time and the modules can be prepared for daily routine operation via the **Work Flow Guide**.

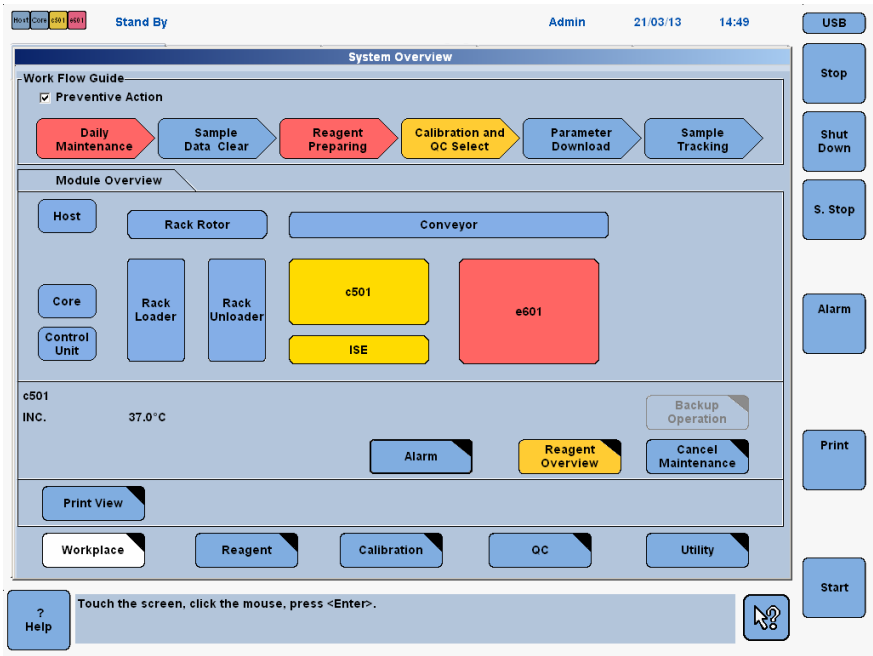

Figure B-22 System Overview screen

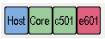

From any point in the software—**Workplace**, **Reagent**, **Calibration**, **QC**, or **Utility**—the **System Overview** screen can be accessed by choosing the icon in the top left corner of the screen or by pressing F12.

Work Flow Guide area

The **Work Flow Guide** area at the top of the **System Overview** screen guides you through the preroutine operation.

Module Overview area

The **Module Overview** area provides a view of the current status of the modules and components (for example, rack loader, unloader, **c** 501 module, and **e** 601 module) of the **cobas** 6000 system.

The lower section of the **Module Overview** area displays information relevant to the module or component currently selected such as incubator temperature (INC.).

*Temperature (**e** 601)*

Choose this button to display the **Temperature** window. This window displays actual, target and control temperatures for the **e** 601 module currently selected.

Alarm

This button displays the color corresponding to the highest priority alarm of the currently selected module or component. Use this button to display the global **Alarm** screen. The alarm(s) corresponds to the module or component currently selected.

For a detailed description of the **Alarm** screen, refer to the *Online Help*.

Reagent Overview

Choose this button to display an overview of the reagents loaded on the module currently selected.

See *Reagent Overview button* on page B-146.

*Backup operation (**c** 501)*

In case of problems with the rack sampler unit, the backup operation mode allows to continue sample measurement on **c** 501 modules.

See *Backup operation* on page B-244.

Cancel Maintenance

Use this button to stop all maintenance items running on the currently selected module after confirmation.

Some maintenance items performed on the analyzer cannot be stopped after start.

Print View

Use this button to display the **Print View** window. This window is used to view reports in the print buffer, to print and also to write reports to a data storage medium.

Color scheme of the System Overview screen

The **System Overview** screen uses a color scheme to display the status of the analyzer.

The following table describes the meaning of the color scheme for each button/module on the **System Overview** screen.

Colors of the modules in the status line

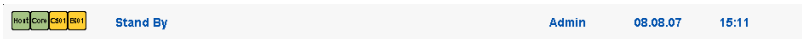

Figure B-23 Status line

Red	Indicates an instrument alarm of **Stop**, **S.Stop** or **E.Stop** level or a reagent is empty and there is no second **cobas c** pack or **cobas e** pack on this particular module, or a mandatory reagent is not on board.
Yellow	Indicates an instrument alarm with a caution level or the number of remaining tests is less than the yellow alarm level.
Pink	Indicates reloading of reagents possible (reagent reloading function of **e** 601) See *Reagent reloading (e 601)* on page B-133.
Purple	Indicates the number of tests remaining for a diluent, test reagent or detergent volume is less than the purple alarm level (daily requirement)—only applicable when **Preventive Action** check box is checked.
Light blue	Indicates a status other than **Stand By** (e.g., **Operation** or **Maintenance**).
Light green	Indicates **Stand By** mode.
Dark green	Indicates an administrator has inactivated the module.
Black	Indicates the module is powered off.
X in a module	Indicates the module is masked.
\ in a module	Indicates the module is service masked.

For information about instrument status, see *Instrument status* on page B-237.

Colors in the Work Flow Guide

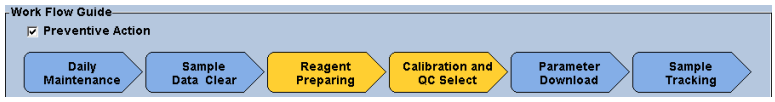

Figure B-24 Work Flow Guide area of the System Overview screen

Button in Work Flow Guide area	Color	Meaning
Daily Maintenance	Red	A maintenance item has expired.
	Yellow	A maintenance item is about to expire.
Sample Data Clear	Red	The database is full, 10 000 records. No additional samples can be processed until database (**Routine** view) is cleared.
	Yellow	The database is nearly full (more than 9400 records).
Reagent Preparing	Red	Reagent for at least one test or detergent required for the test is not on board (mandatory) or is empty.
	Yellow	The number of tests remaining for a reagent is less than the yellow alarm level.
	Purple	The number of tests remaining for a diluent, test reagent or detergent volume is less than the purple alarm level (daily requirement)—only applicable when **Preventive Action** check box is selected.
Calibration and QC Select	Yellow	One or more calibration or quality control is recommended. See *Calibration and QC Select button* on page B-55.
Parameter Download	Red	A **cobas c** pack or **cobas e** pack barcode, calibrator barcode, or QC barcode was read by the analyzer, which has not been installed before. New calibrator lots, QC lots and applications need to be installed before placing on the analyser.

Table B-4 Color scheme Work Flow Guide area

For more information about the **Work Flow Guide**, see *Work Flow Guide* on page B-44.

Colors in the Module Overview

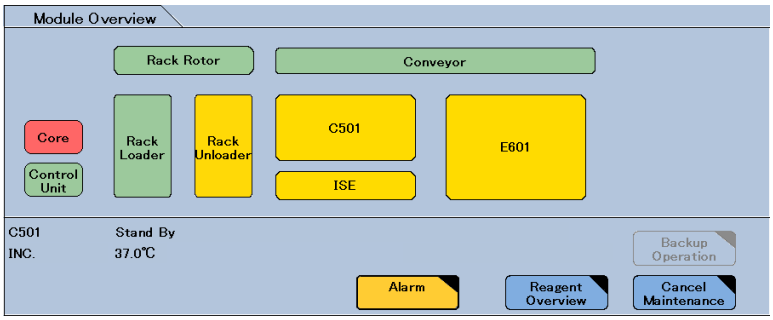

Figure B-25 Module Overview area of the System Overview screen

Button in Module Overview	Color	Meaning
Rack Rotor, Conveyor, Core, Control Unit, Rack Loader, Rack Unloader, C501, ISE, E601	Red	An instrument alarm of **Stop**, **S.Stop** or **E.Stop** level.
	Yellow	An instrument alarm with a caution level.
	Light blue	Indicates a status other than **Stand By** (e.g., Operation or Maintenance).
	Light green	Indicates **Stand By** mode.
Module	Red	Indicates an instrument alarm of **Stop**, **S.Stop** or **E.Stop** level or a reagent is empty and there is no second **cobas c** pack or **cobas e** pack on this particular module, or a mandatory reagent is not on board.
	Yellow	Indicates an instrument alarm with a caution level or the number of remaining tests is less than the yellow alarm level.
	Pink	Indicates reloading of reagents possible (reagent reloading function of **e** 601) See *Reagent reloading (e 601)* on page B-133.
	Purple	Indicates the number of tests remaining for a diluent, test reagent or detergent volume is less than the purple alarm level (daily requirement)—only applicable when **Preventive Action** check box is checked.
	Light blue	Indicates a status other than **Stand By** (e.g., **Operation** or **Maintenance**).
	Light green	Indicates **Stand By** mode.
	Dark green	Indicates an administrator has inactivated the module.
	Black	Indicates the module is powered off.
	X in a module	Indicates the module is masked.
	\ in a module	Indicates the module is service masked.
Reagent Overview	Red	A reagent is empty and there is no second reagent cassette or **cobas e** pack on this particular module, or a mandatory reagent is not on board.
	Yellow	The number of tests remaining for a reagent is less than the yellow alarm level.
	Purple	The number of tests remaining for a reagent is less than the purple alarm level.
Alarm	Red	Indicates an instrument alarm of **Stop**, **S.Stop** or **E.Stop** level
	Yellow	Indicates an instrument alarm with a caution level

Table B-5 Color scheme Module Overview area

Work Flow Guide

The **Work Flow Guide** area at the top of the **System Overview** screen guides you through the preroutine operation.

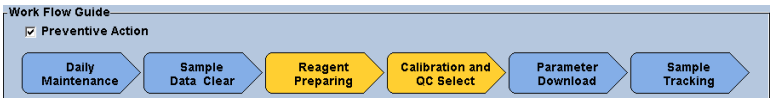

Figure B-26 Work Flow Guide

The **Work Flow Guide** area consists of 6 buttons: **Daily Maintenance**, **Sample Data Clear**, **Reagent Preparing**, **Calibration and QC Select**, **Parameter Download**, and **Sample Tracking**. The first 4 buttons are placed in the suggested sequence of preventive action. If a button remains blue, that action is not necessary.

The **Sample Tracking** button is used for locating samples on the analyzer and unloading selected racks from the system.

For more information about the different buttons, see:
Colors in the Work Flow Guide on page B-42
Preventive action on page B-44
Daily Maintenance button on page B-47
Sample Data Clear button on page B-48
Reagent Preparing button on page B-48
Calibration and QC Select button on page B-55
Parameter Download button on page B-62
Sample Tracking button on page B-64
Tracking samples on the analyzer on page B-103

Preventive action

Preventive action is a look ahead at what might be required during the daily routine. When activated, preventive action triggers the following items:

- Reagent purple alarm (diluent, test reagent or detergent volume is less than the daily requirement).
- Recommended calibration for tests with calibrations due within the **Remaining Time** set on the **Calibration Status** screen.

Yellow and red alarms have higher priority than the purple alarm.

At wake up or power on, the **Preventive Action** check box on the **System Overview** screen is automatically selected and therefore active.

It is recommended to deselect the **Preventive Action** check box after all recommended reagents are loaded and recommended calibrations have been performed.

Recommended calibrations are only performed if they were confirmed and accepted by the operator.

Function of the Work Flow Guide elements

Table below shows the links, configuration, and actions on the **Work Flow Guide**.

Button	Option	Link	Configuration	Action
Daily Maintenance		**Utility** > **Maintenance** screen	**Utility** > **System** (**Page 2/4**) > **Pipe Setting**	Perform maintenance issues
Sample Data Clear		**Sample Data Clear** window		
	Clear	**Workplace** > **Data Review** > **Delete All**	no configuration	Delete all sample records, move QC data to **QC View** database
	Backup and Clear	**Workplace** > **Data Review** > **Backup Data**	no configuration	Copy sample records to a special File Format
Reagent Preparing		**Reagent Preparing** window		
	Reagent Load List	**Print** (global button) > **Reagent Information** > **Reagent Load/Unload List** > **Print**	**Utility** > **System** (**Page 2/4**) > **Reagent Level** **Utility** > **Module Set** > **Test Assignment** > **Module** button *Assigning a test to a module* on page B-292	Print **Reagent Load/Unload** list
	Open Channel for c 501	**Reagent** > **Setting** > **Open Channel** > **Open CH Selection**(**c** 501) window	no configuration	Reserve a channel for a **cobas c** pack MULTI
	Reagent Prime	**Reagent** > **Setting** > **Reagent Prime** *Reagent Prime* on page B-130	no configuration	Prime the ISE reagents

Table B-6 Options, Links, configuration, and actions of the Work Flow Guide (Sheet 1 of 2)

Button	Option	Link	Configuration	Action
Calibration and QC Select		**Calibration and QC Select** window		Indicates recommended calibrations and QCs
	Start Up	**Calibration** > **Status** > **Start Up**	**Calibration** > **Status** > **Start Up Setting** *Selecting tests for start-up calibrations* on page B-181	Request Start Up calibration
	Recommended		**Utility** > **Application** > **Calib.** *Auto calibration* on page B-269	Request recommended calibration
	Routine QC	**QC** > **Status** > **Routine QC Assign** *Routine QC Assign* on page B-207	**QC** > **Install** *QC Install screen* on page B-224	Request routine QC
	Stand By Bottle QC	**QC** > **Status** > **Stand By Bottle QC** > **Select** (all) *To perform controls for standby reagents* on page B-210	no configuration	Request stand by bottle QC
	Timeout		**Utility** > **Application** > **Range** > **Control Interval Time** *Control interval time* on page B-276	Request recommended timeout QC
	QC	**Print** (global button) > **QC** > **QC Load List** > **Print**	no configuration	Print **QC Load** list
	Calibration	**Print** (global button) > **Reagent Information** > **Reagent Load/Unload List** > **Print**	no configuration	Print **Calibration Load** list
Parameter Download		**To Do List** window		Indicates availability of new information on **cobas** link
	Application	**Utility** >**Application** > **Analyze** > **Download**	no configuration	Download application data *Downloading new application parameters* on page B-259
	Calibrator	**Calibration** > **Install** > **Download**	no configuration	Download calibrator data *Downloading or updating calibrator data* on page B-188
	Control	**QC** > **Install** > **Download**	no configuration	Download QC data *Downloading control data* on page B-225
SampleTracking		**Sample Tracking** window	no configuration	Check sample status View sample results Unload sample racks *Tracking samples on the analyzer* on page B-103

Table B-6 Options, Links, configuration, and actions of the Work Flow Guide (Sheet 2 of 2)

Preroutine operation

Preroutine operation involves the following tasks:

- Performing maintenance actions
- Clearing and backing up data, if necessary
- Download of parameters, if necessary
- Preparation of reagent
- Calibration
- Measurement of quality controls

The **Work Flow Guide** area at the top of the **System Overview** screen guides you through the preroutine operation.

Daily Maintenance button

Requirements: Define maintenance types

The **Daily Maintenance** button indicates when maintenance is about to expire. However this function is available only if maintenance intervals for maintenance items are defined.

For more information, see:
Color scheme Work Flow Guide area, Table B-4 on page B-42
Maintenance types—scheduling and tracking maintenance items on page C-9

Choosing **Daily Maintenance** on the **Work Flow Guide** area displays the **Maintenance** screen. Use the **Maintenance** screen to execute maintenance actions or maintenance pipe functions.

See *Performing maintenance items or pipes* on page C-13.

Define a power up pipe

For a proper use of the analyzer Roche Diagnostics recommends performing some maintenance items regularly. We recommend automating these maintenance items by means of maintenance pipes.

See *Recommended maintenance pipes* on page C-32.

Daily maintenance items may be programmed as a power up pipe and then performed automatically when powering on the analyzer or as a daily pipe if you do not shut down the analyzer daily.

To backup the data of your **cobas** 6000 system to **cobas** link we recommend including the maintenance item Smart. Com Essential information upload into the power up pipe or in the daily pipe.

For more information, see:
Power Up Pipe function on page C-15
Start Up pipe function on page C-16

Sample Data Clear button

Use the **Sample Data Clear** button to delete the contents of the database (**Workplace** > **Data Review** > **Routine View**).

For more information, see *Color scheme of the System Overview screen* on page B-41.

If **Sample Data Clear** is executed, all records of the samples are deleted and QC data is moved to the **QC View** data base. Less sample data in the database allows faster access to the data. Backing up on a periodic basis is recommended. If your system is connected to a Host, make sure that all data has been uploaded before performing the **Sample Data Clear**.

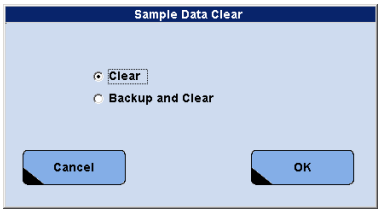

Figure B-27 Sample Data Clear window

For more information on saving data, see:
Archiving patient data on page B-96
QC data base management on page B-204

Operation of the analyzer may slow down

If the database for patient results or QC results is overloaded, the operation of the analyzer software may slow down. If the sample count in **Data Review** exceeds 10,000, the analyzer automatically goes into stop mode.

- It is strongly recommended to delete the contents of **Data Review** daily.
- Make sure that the results are transferred to the Host or saved on external storage media before deleting the contents of **Data Review**.

Reagent Preparing button

Requirements: Define reagent warning levels and mandatory tests

The **Reagent Preparing** button indicates insufficient amount of reagent. However, this function is available only if the volumes for the reagent level check and the mandatory tests were defined.

For information on the color scheme, see *Color scheme of the System Overview screen* on page B-41.

For information on defining the reagent warning levels, refer to the *Online Help* of the **Reagent Level Check** window.

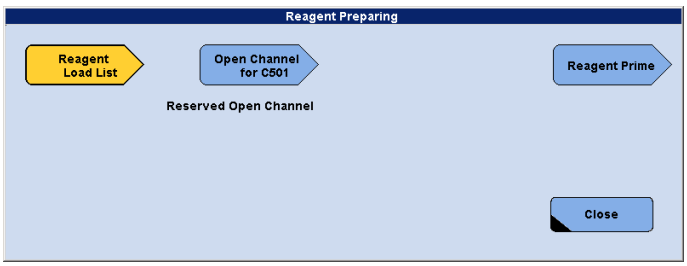

Figure B-28 Reagent Preparing window

Print Reagent Load List

The **Reagent Load List** displays the **cobas c** packs, **cobas e** packs, auxiliary reagents and other consumables that need to be replenished on the analyzer.

► To print a Reagent Load List/Unload List

1. Choose **Reagent Preparing** on the **System Overview** screen.
2. Choose **Reagent Load List** on the **Reagent Preparing** window.

   A confirmation window appears.
3. Choose **Yes** to print the **Reagent Load List/Unload List**.

■

Now, remove and replace any required reagent, diluent, detergent or wash solution according to the **Reagent Load List/Unload List**.

Ensure that reagents have not exceeded their expiration dates. Check the expiration status on the **Reagent Overview** screen.

For more information, see:
Reagent Overview c 501 module on page B-146
Reagent Overview e 601 module on page B-152

c 501 – ISE unit

ISE IS, ISE Ref., and ISE Dil. are stored in reagent bottles in the ISE reagent compartment. A green indicator lamp (next to the reagent position) lights up if no reagent bottle is present or if the liquid level falls below the limit where the bottle needs to be replaced. In this case the ISE probe pipettes from the second bottle (standby bottle) of the reagent. If the standby bottle of ISE IS is used as changeover reagent, a changeover calibration is automatically recommended by the system.

When replacing an ISE reagent bottle, the remaining volume is reset. Before starting a measurement, reagent level is detected by using the ISE reagent probe to check the remaining volume of reagent so that the number of available tests can be controlled.

See *ISE reagent volume* on page B-110.

Hints for replacing ISE bottles

- Always use new bottles.
- Make sure bubbles are not formed in the ISE bottle. If bubbles formed, the liquid volume may not be detected correctly by the liquid level detection.
- After replacing an ISE reagent, recalibrate the ISE unit before you resume routine operation.

Evaporation of internal standard

Downward drift in controls and patient sample results can occur due to increased evaporation of the internal standard.

Evaporation of the internal standard can occur due to an unfavorable combination of low humidity, high altitude and air movement in the laboratory depending on the use of air conditioning or fans. Another contributing factor is the internal standard bottle filling level, since it has a direct impact on the concentration of the internal standard.

In case of proven or potential internal standard evaporation the use of a bottle insert for the internal standard is recommended.

For ordering the bottle inserts and information on the correct usage of the bottle inserts, please contact your Roche service representative.

► **To replace ISE IS or ISE Dil.**

Replacement during operation is allowed only in the position where the green LED is lit.

Replacement of ISE IS and ISE Dil. can be done with the top cover closed.

1. Insert the bottle insert in the new internal standard bottle, if necessary.
2. Remove the empty bottle from the position where the green indicator lamp lights up.

   Dispose of the empty bottle according to local regulations.

   CAUTION! False result due to incorrect loading position. Take care to place the bottles in the correct positions as labeled.
3. Place a new bottle into the reagent position.

   Reagent registration is performed automatically when a new bottle is placed.

■

► To replace ISE reference solution (ISE Ref.)

1 Put the module in standby.

2 Unlock and open the top cover of the module.

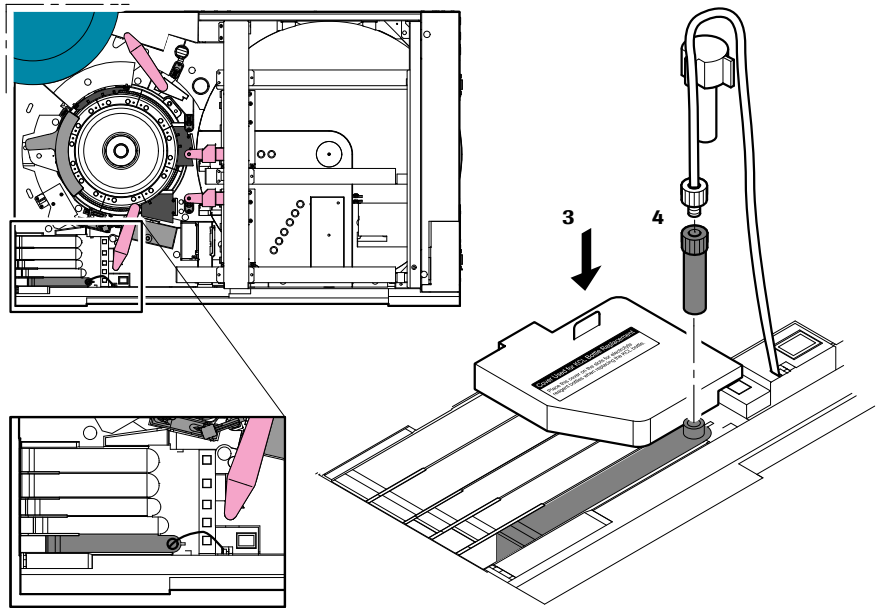

Figure B-29 Cleaning the ISE Ref. aspiration filter

CAUTION! Liquid from the tip of the tube may drop into another ISE reagent and may lead to false results. Place the dedicated cover over the ISE reagent bottles.

3 Place the dedicated cover over the ISE reagent bottles.

4 Remove the tubing from the ISE Ref. bottle and clean the ISE Ref. aspiration filter.

See *Cleaning the ISE Ref. (KCl) aspiration filter* on page C-88.

5 Replace the ISE Ref. bottle, and place the tubing into the new bottle. Make sure that the end of the tube touches the bottom of the bottle. Otherwise, reagent may not be pipetted properly.

The indicator lamp of the ISE Ref. bottle turns off.

Dispose of the empty bottle according to local regulations.

6 Remove the dedicated cover from the ISE reagent bottles.

7 Close the top cover of the module and lock it.

Reagent registration is performed automatically when a new bottle is placed.

■

After replacing the ISE Ref. bottle, it is necessary to perform a **Reagent Prime**.

► To perform a Reagent Prime

1. From the **System Overview** screen, choose **Reagent Preparing**.
2. Choose **Reagent Prime** on the **Reagent Preparing** window.
3. Select a module. Selected modules are highlighted.
4. Choose **Ref** in the **ISE** area.
5. Choose **Execute**.

   The prime is complete when the analyzer returns to stand by.

■

After the **Reagent Prime**, recalibrate the ISE unit before you resume routine operation.

For details on how to recalibrate the ISE unit, see *Calibration and QC Select button* on page B-55.

c 501 – photometric unit

Replace all required **cobas c** packs and auxiliary reagents as indicated by the **Reagent Load List**. Ensure that reagents have not exceeded their expiration date.

*Replacing **cobas c** packs*

The **c** 501 module automatically unloads empty **cobas c** packs to the cassette disposal, which is located behind the left front door of the **c** 501 module. It is also possible to unload **cobas c** packs manually from the **Reagent** > **Setting** screen (only possible in standby).

For details see *Unloading reagent cassettes* on page B-132.

To load a new **cobas c** pack, follow the procedure below:

⚠ CAUTION

Injury due to contact with cassette loading mechanism

The instrument may recognize your hands or fingers as a **cobas c** pack if you insert your hands or fingers into the cassette loading port. An unloaded **cobas c** pack may hit your hands or fingers when the instrument is unloading **cobas c** packs.

- The **c** 501 module cover must be closed and locked when loading **cobas c** packs.
- Leave the cassette table closed, except when registering **cobas c** packs or when manually unloading **cobas c** packs from the **Reagent** > **Setting** screen.
- Do not insert anything other than **cobas c** packs into the cassette loading port.

► To load a cobas c pack

1. Fold the cassette table at the front of the **c** 501 module downward to get access to the cassette loading port.

   To locate the cassette loading port, see *Cassette loading port* on page A-79.

2. Place the **cobas c** pack right in front of the loading port with its **barcode label facing to the right**.
3. Slide the **cobas c** pack all the way into the loading port until you sense a resistance.

   From this point on the analyzer handles the **cobas c** pack without any further intervention of the operator: The **cobas c** pack is pulled in to the preparation station where the module automatically performs the reagent registration.

■

If a **cobas c** pack barcode is facing the wrong direction or the barcode is unreadable, a label reading error occurs and the **cobas c** pack is not registered. In this case the **cobas c** pack is rejected and will not be loaded but pushed out of the loading port.

Replacing auxiliary reagents

For instructions how to replace auxiliary reagents, see:
To replace a cell detergent bottle on page B-136
To replace Sample Cleaner 1 and 2 or EcoTergent on page B-136

e 601

Replace all required **cobas e** packs, auxiliary reagents and consumables on the respective modules as indicated by the **Reagent Load List**.

*Replacing **cobas e** packs*

To load a new **cobas e** pack, follow the procedure below:

⚠ CAUTION

Incorrect results due to incorrect reagent temperature

cobas e packs taken directly from the refrigerator may result in incorrect results.

- Only insert **cobas e** packs of the correct temperature of 20 ±3 °C (68 ±5.4 °F)

► To load cobas e packs

CAUTION! Risk of personal injury and damage to the analyzer. Do not open the reagent disk cover while the module is in operation.

1 Make sure, that the system is in standby.

2 Lift off the lid of the reagent disk.

See *Reagent disk* on page A-102.

3 Open the caps of each **cobas e** pack manually and set the caps gently to the so called *soft-close* position: The caps are almost closed, but not tight closed.

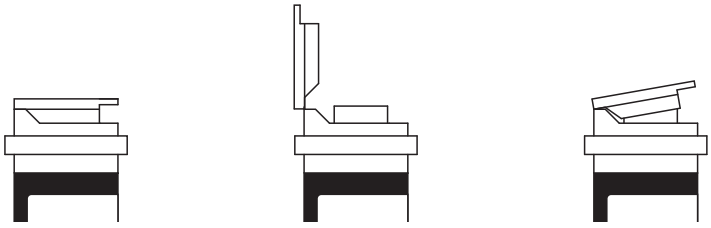

A Cap: Closed **B** Cap: Open **C** Cap: Soft-close position

Figure B-30 Caps of **cobas e** pack: Soft-close position

4 Check that there are no microbeads deposited on the inside of the transparent reagent cap. If yes, dispose of the **cobas e** pack according to local regulations.

5 Check that there is no foam or bubbles in any of the reagent bottles and no reagent film formed in the neck of the reagent bottles.

6 Place the required **cobas e** packs in the reagent disk. Ensure that the **cobas e** packs are placed in the reagent disk in the correct orientation.

7 Close the lid of the reagent disk. A reagent scan is started and the **Reagent Overview** window (**System Overview** > **Reagent Overview**), the **Reagent** > **Status** screen, and the **Reagent** > **Setting** screen are updated.

■

Replacing auxiliary reagents

For instructions how to replace auxiliary reagents, see:
Replacing auxiliary reagents (e 601) on page B-137
Replacing consumables and emptying solid waste (e 601) on page B-144

Calibration and QC Select button

It is necessary to calibrate all applications and measure quality control (QC) samples regularly to verify the stability of reagents and the entire system. Make sure calibration has been completed successfully and all QC results are OK before you start routine operation.

The intervals of calibration and QC vary with each application and therefore each application has its individual configuration. According to this configuration, the system automatically recommends calibrations and QC measurements for all registered applications.

For details about calibration and QC intervals refer to the instructions for use of the corresponding test.

Each time the system recommends a calibration it is indicated by the **Calibration and QC Select** button turning yellow.

The following sections explain how a recommended calibration is executed. The instructions are given assuming that all configurations for calibration and QC are already set.

For general information on calibration, see:
Calibration concept on page B-159
Causes for automatic calibration recommendations on page B-160
Description of application parameters – Calib. tab on page B-267
To select tests for start-up calibration on page B-181

The entire calibration and QC process comprises the following parts:

1. Requesting calibration and QC and printing load lists
2. Measuring calibrators and controls
3. Validating calibration and QC results

The following explains each of these parts. However, some details depend on your laboratory's decision on a specific calibration workflow (for example, time-triggered calibration or QC-triggered calibration).

Requesting calibration and QC and printing load lists

The **Calibration and QC Select** button on the **System Overview** screen turns yellow when a calibration or quality control is recommended by the system.

Choose the **Calibration and QC Select** button to display the **Calibration and QC Select** window.

Use the **Calibration and QC Select** window to perform following actions:

- Accept the recommended calibrations or quality controls.
- Print a **Calibration** or **QC Load List**.

Notes on recommended calibrations and QC measurements

Calibration and QC measurements are recommended by the system only for applications which have their corresponding **cobas e** packs and **cobas c** packs loaded.

In case there are **cobas e** packs or **cobas c** packs on board with less than ten tests remaining, a confirmation window opens and it is possible to cancel the calibration or QC measurements request for this reagent.

Use the following procedure to request the recommended calibrations and controls. If you need to select additional calibrations manually, select these from the **Calibration** > **Status** screen.

See *Requesting and cancelling calibrations manually* on page B-171.

Requesting calibration and QC

To request calibration and QC, follow the procedure below:

► To request calibration and QC

1 Choose **Calibration and QC Select** in the **Work Flow Guide** area.

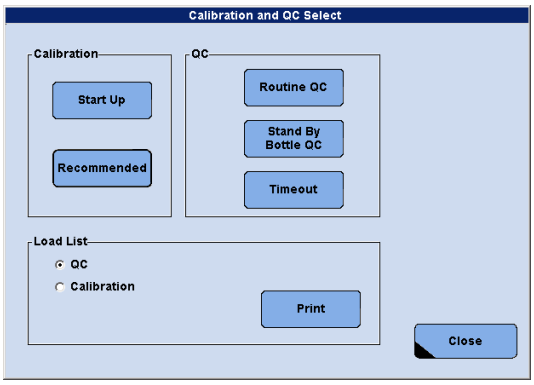

Figure B-31 Calibration and QC Select window

2 Choose the buttons that are yellow in both the **Calibration** area and the **QC** area to select the suggested calibrations and controls for measurement.

In case there are reagents with less than 10 tests on board, a confirmation window opens and it is possible to cancel the calibration or QC request for these reagents.

3 Select the list you want to print from the **Load List** area:

- **QC** comprises all requested QCs including QC after calibration.
- **Calibration** comprises all requested calibrations.

4 Choose **Print** to print the selected load list.

The **QC Load List** and the **Calibration Load List** respectively displays all controls and calibrators that are needed to perform the requested measurements.

If you need to run QC for stand by cassettes, do one of the following:

- Choose **Stand By Bottle QC** to request a QC for all stand by reagents.
- Choose **QC** > **Status** > **Stand By Bottle QC**, select individual tests from the list, and choose **OK**.

See *Requesting QC measurements* on page B-209.

5 Load the calibrators and controls on the analyzer as directed by the **Calibration Load List** and the **QC Load List**.

See *To load required calibrators and controls* on page B-59.

■

```
                                  Calibration Load List              07/10/08   09:24

   NAME          LOT            R.NO.          EVENT     VOLUME
   H2O           99999900                     ------   --------
   CFAS          17715200                     ------   --------
   ISELOW        69906400       S0002-1       ------   --------
   ISEHIGH       69631400       S0002-2       ------   --------
   ISECOMP       18191800       S0002-3       ------   --------
   TSH-L1        182423                            2      196.0
   TSH-L2        182423                            2      196.0
```

Figure B-32 Calibration Load List report

```
                        QC Load List                                    27/11/08      16:59

 ----------------------------      System Specific Rack      ----------------------------
 AUTOMATIC QC RACK RANGE       0000 -  0000

 NAME          LOT              EVENT     VOLUME   R.NO.
 PPU           17628700          ----   --------   C0001-2
 PNU           17683000          ----   --------   C0001-1

 ----------------------------        QC After Calib.        ----------------------------
 NAME          LOT              EVENT     VOLUME   R.NO.
 PC U2         15041800             2       22.0
 PC U1         18067700             2       22.0
 PC CARD1      18269000             4       60.0   C0005-1
 PC CARD2      18269100             4       60.0   C0005-2

 ----------------------------      Module Specific Rack      ----------------------------
 MODULE E1     RACK RANGE        5- 10
 NAME          LOT              EVENT     VOLUME   R.NO.
 PC U2         15041800             2       22.0
 PC U1         18067700             2       22.0
 PC CARD1      18269000             4       60.0
 PC CARD2      18269100             4       60.0
```

Figure B-33 QC Load List report

Hints about the Load Lists

- **Volume** is given only for **e** 601 determinations.
- If a rack number is displayed (**R. No.**), then a position assignment is stored in the software.
- Do not place barcoded calibrator and control vials on racks with position assignment.
- One **Event** for calibrator is pipetting this calibrator in duplicate for one measurement cell and one **cobas e** pack.
- One **Event** for quality controls is one determination for one parameter out of this quality control vial.

Loading calibrators and controls

To load calibrator and controls, follow the procedure below:

⚠ CAUTION

Incorrect results due to expired calibrators or controls

Data obtained using expired calibrators or controls are not reliable.

- Do not use calibrators or controls that have expired.

⚠ CAUTION

Incorrect results due to concentrated ISE calibrators

The concentration of the ions increases due to evaporation, this may result in an incorrect calibration, and thus incorrect results.

- For ISE calibrations set fresh calibrators just before the calibration is performed.
- Do not aliquot or store opened bottles of ISE calibrators low and high.

⚠ CAUTION

Incorrect results due to calibration or QC failure

If manually assigned vials and barcoded vials are on the same rack, the requested calibrations and controls are not measured and the requests are deleted.

- If a calibrator or QC vial (or another sample container) needs to be manually assigned (for example, due to an unreadable barcode) do not place any vials or other sample containers with barcodes on the same rack.
- Do not mix barcoded and non-barcoded vials in one rack.
- Do not use micro cups for calibrators and controls.

► To load required calibrators and controls

CAUTION! QC failure! In non-barcode mode, the system cannot calculate the remaining volume in the control vial (**e** 601). Ensure that sufficient control material is available.

1. Using the load list as a guide, prepare all required calibrator and control materials according to the manufacturer's instructions.
2. Check that no bubbles or foam are visible on the liquid surface.

   CAUTION! Injury due to contact with rack loader mechanism. Only load samples onto the rack loader when the green light on the rack loader is on.
3. Load calibrators and controls onto the racks (calibrators onto black racks, controls onto white racks) and place the racks on the loader.

   Two or more calibrator racks are to be measured as one group, so do not put other racks between them. When you carry out QC after calibration, QC racks have to follow calibrator racks directly. Do not set other racks with the calibrator and QC racks.

■

For more information, see:
To load calibrator vials on page B-184
To assign calibrator positions on page B-183
Racks on page A-60

Measuring calibrators and controls

Once calibrations and QCs are requested and the calibrators and controls placed on the loader, the measurements can be started.

► To measure calibrators and controls

1 Choose **Start** (global button).

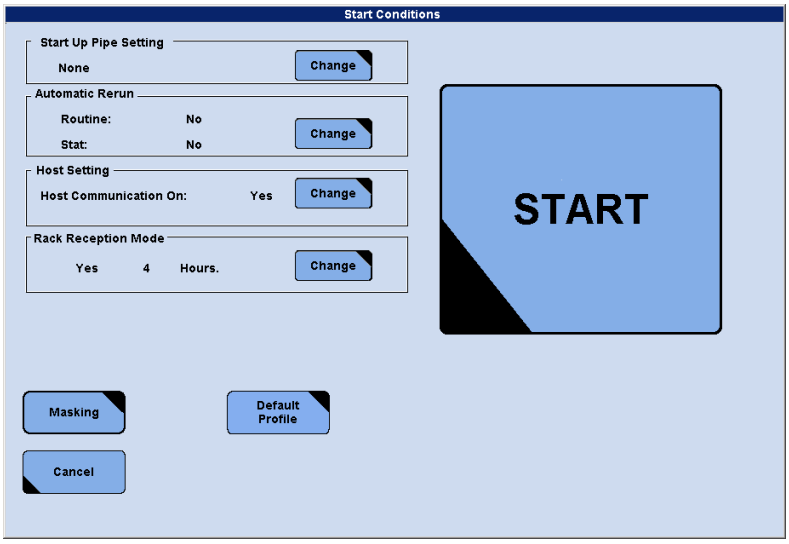

Figure B-34 Start Conditions screen

2 Choose **Start** on the **Start Conditions** screen. The **Start Conditions** screen closes and the calibration and control run begins.

If automatic printout is selected on **Utility** > **System** (**Page 4/4**) > **Auto. Print**, the **Calibration Monitor** and **Control Result Monitor** report is automatically printed when the measurements are completed; calibration and QC results can also be viewed choosing **Print** (global button) > **View**.

■

Validating calibration and QC results

It is important to verify that calibrations and QC results are valid before measuring routine samples. Validation can be performed either at the Host or on the **cobas** 6000 system. For routine operation it is sufficient to validate calibrations and QC by means of the **System Overview** screen:

A failed or newly recommended calibration is indicated on the **System Overview** screen by the **Calibration and QC Select** button turning yellow.

Information on the status of the calibrators that are currently processing can be viewed on the **Workplace** > **Calib. Review** screen.

See *Calib. Review screen* on page B-101.

Detailed information on calibration results can be viewed on the **Calibration** > **Status** screen.

See *Calibration Status screen* on page B-170.

Detailed information on quality control results can be viewed on **QC** > **Individual** screen.

See *QC Individual screen* on page B-213.

If the automatic printout of calibration or QC results is configured (on **Utility** > **System** (Page 4/4) > **Automatic Printout**), it is also possible to use these printouts for validation.

If calibration or QC failed…

If a calibration fails or a QC result falls out of the expected range, check for data alarms on the **Workplace** > **Calib. Review** screen or on the printouts.

Data alarms are issued when measurement values or results are in any way unusual or unexpected. Data alarms appear on screen and on reports as short strings (up to six characters) also referred to as data flags. Look up the meaning of each data flag and possible remedies in the troubleshooting part of the Operator´s Manual.

See *Data alarms* on page D-3.

After taking the necessary measures, repeat the calibration or QC before you begin routine analysis.

If a realtime QC rule is violated, the system issues a realtime QC alarm. Ensure you check the results of the QC to see if you accept the values.

Quality control results

The results of QC measurements are saved in the database and displayed on the **Data Review** screen as well as on the **QC** > **Run Status** screen and **QC** > **Individual** screen. It is important to regularly accumulate these results for long term quality control data storage (**QC** > **Cumulative**).

Parameter Download button

The **Parameter Download** button turns red if a **cobas c** pack or **cobas e** pack, calibrator (**c** 501), or QC (**c** 501) was loaded onto the analyzer, which has not been installed before. New information for applications, controls, and calibrators must be downloaded from **cobas** link.

Choose **Parameter Download** in the **System Overview** screen to open the **To Do List** window.

Use **Download** button to display the appropriate screen. Depending on the tab that was selected on the **To Do List** window, one of the following screens is displayed:

- **Utility** > **Application**
- **Calibration** > **Install**
- **QC** > **Install**.

On each of these screens, you can initiate the download of the missing item from **cobas** link by choosing the **Download** button.

For an overview of downloading parameters from **cobas** link, see *Installing an application* on page B-256.

***cobas c** packs*

The system-ID is displayed in the **Reagent Code** column. The system-ID is also displayed in the **Code** column in the **Reagent** > **Setting** screen.

*Calibrators and controls (**c** 501)*

The first six digits of the lot number followed by 00 are displayed in the **Lot No.** column.

***cobas e** packs*

The ACN is displayed in the **Reagent Code** column.

*Calibrators and controls (**e** 601)*

An internal software number is displayed in the **Lot No** column. The internal software number is not the lot number.

► To download new information

1 Choose **Parameter Download** in the **Work Flow guide** area

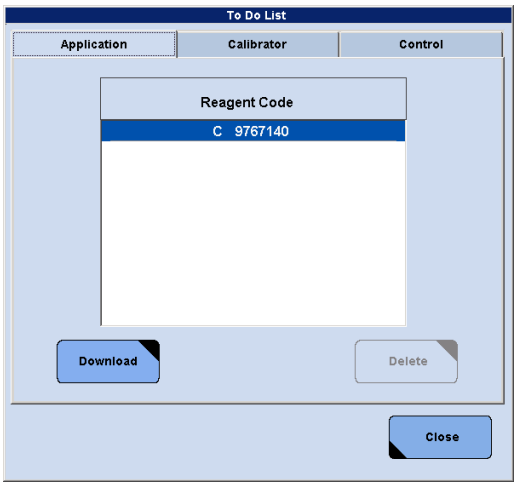

Figure B-35 To Do List window

2 Choose the tab of the corresponding items you want to download.

3 Select an item from the list and choose **Download**.

The corresponding screen will be opened, for example, the **Utility** > **Application** screen for application parameters.

4 Choose the **Download** button to open the **Download** window.

The following steps are described in the corresponding chapters:
Downloading new application parameters on page B-259
Downloading or updating calibrator data on page B-188
Downloading control data on page B-225

■

Sample Tracking button

The **Sample Tracking** window allows the operator to search for any sample on the analyzer from the moment of registration (the sample has passed the barcode reader) to the moment when the sample reaches the rack unloader (Tray 1).

The **Sample Tracking** window also allows the operator to search for samples and subsequently unload the rack containing the sample(s) of interest.

Notes on the Sample Tracking window

Only STAT and routine samples can be searched for in the **Sample Tracking** window.

The location of a sample is indicated by the **Sample Tracking** window only when the sample tray has not been removed from the unloader and no new run has been started yet.

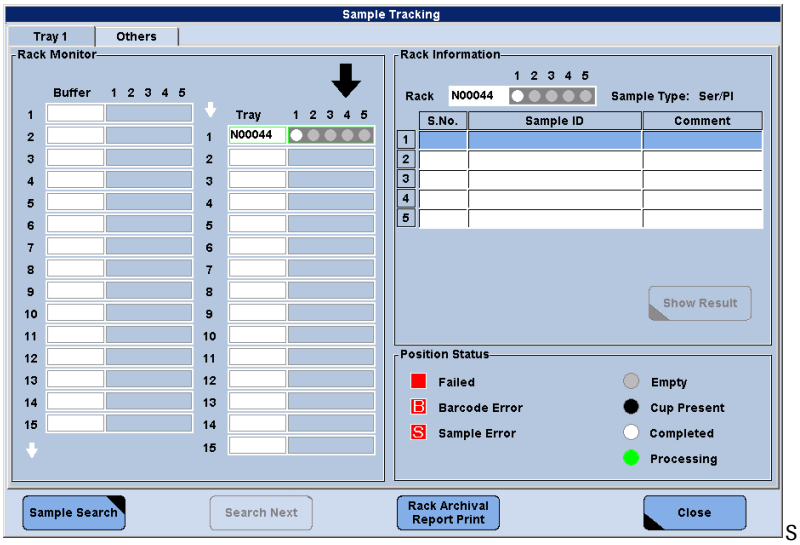

Figure B-36 Sample Tracking window

For more information, see:
Sample tracking on page B-74
Tracking samples on the analyzer on page B-103

Routine operation

Before continuing with routine operation, clear the **Preventive Action** check box on the **System Overview** screen. Otherwise, the system will issue purple and other irrelevant alarms in the course of routine operation.

Routine operation involves the following items:

1. Processing routine samples
2. Processing STAT samples
3. Processing reruns
4. Checking results
5. Sampling Stop

The way in which routine operation works varies depending on the following system settings and sample properties:

- Whether routine or STAT samples are being analyzed
- Whether the analyzer operates in barcode mode or not (set in the **Barcode Setting** area under **Utility** > **System**)
- Whether the analyzer operates in connection with a Host computer

⚠ CAUTION

Incorrect results when sample tubes are not aligned vertically

Incorrect placement of sample tubes in racks may cause incorrect sample pipetting, which may lead to false low results, especially when testing immunoassays.

- Ensure that sample tubes are always placed vertically in the racks.
- For sample tubes with an outer diameter of 13 mm or less, use the Roche Diagnostics cup adapter or use 13 mm MPA racks alternatively.

See *Correct alignment of sample tubes on a rack* on page A-63.

- Only use sample tubes specified for the use with the **cobas** 6000 analyzer series.

See *Sample cups and tubes* on page A-120.

Restrictions for the use of micro cups

When the end of sample probe touches the inner wall of a micro cup this may result in improper sample aspiration.

- Do not use micro cups on **e** 601 modules.
- Do not use micro cups for calibrators and controls.

Sample preparation

When preparing samples, always ensure that the preanalytical requirements are fulfilled according to good laboratory practice and tube manufacturer recommendations.

Processing routine samples

In this section, we describe the workflow for an analyzer that operates in connection with a Host and is set to process routine samples in barcode mode. Processing samples always includes the following three steps:

1. Test selection
2. Loading samples
3. Starting the measurement

For more information on ordering samples, see Chapter 9 *Orders and results*.

Test selection

Test selections for routine samples are downloaded from the Host. However, these test selections can manually be changed—regardless of the mode (**Stand By**, **Stop**, **Operation**, or **Sample Stop**) the analyzer is in.

For information on manual test selections, see *Requesting a test manually* on page B-88.

Loading routine samples

Once test selections have been made on your Host system or on the analyzer, load the samples onto the rack loader observing the notes below. If needed, print a requisition list from **Print** (global button) > **Work Place** > **Requisition List**.

For more details on printing the **Requisition List,** refer to the *Online Help*.

► To load patient samples

1 Prepare sample racks with the correct color and rack numbers according to sample types (such as Ser/Pl, Urine, CSF…).

- For all routine samples use gray racks.
- To verify the correct rack numbers for each sample type refer to the **Rack Assignment** area on the **Utility** > **System** screen.

No test performed on rack

If you place samples in a wrong rack, e.g. urine samples in a Ser/Pl rack, a yellow alarm **No test performed on rack** occurs.

2 Place the samples in the prepared sample racks. Ensure the sample barcodes are facing the open slot in the rack so the barcode reader can scan them.

For more information, see *Correct alignment of sample tubes on a rack* on page A-63.

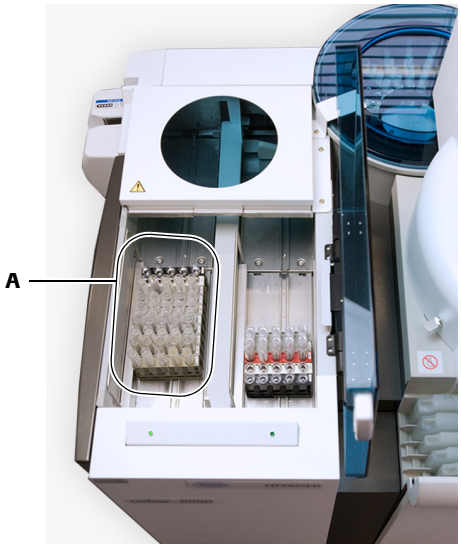

A Rack loader

Figure B-37 Loading patient samples

CAUTION! Injury due to contact with rack loader mechanism. Only load samples onto the rack loader when the green light on the rack loader is on.

3 Place the routine sample racks onto a rack tray in the correct orientation: The barcode labels of the sample racks have to be on the right side when placing the tray into the rack loader. The rack loader is on the left side.

■

Starting the measurement

Before starting a run, ensure that all test selections have been made and all necessary samples, calibrators, and controls have been loaded.

► To start processing

1 Choose **Start** (global button).

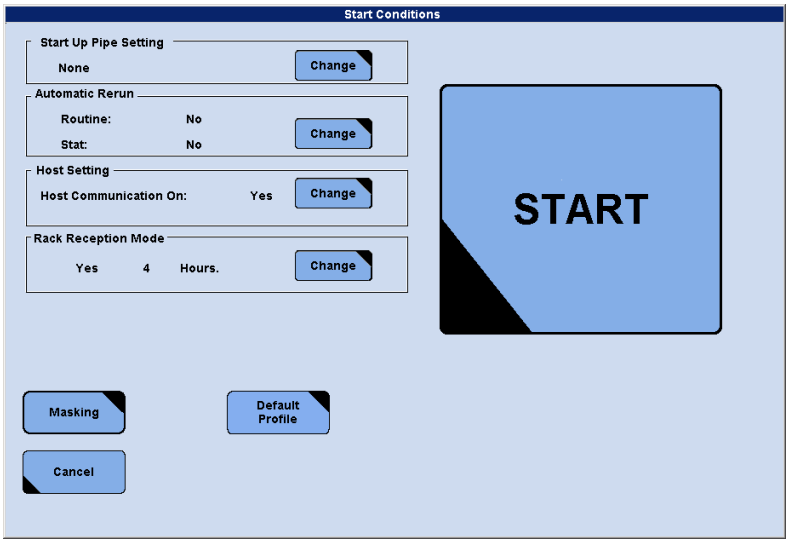

Figure B-38 Start Conditions screen

2 Verify the settings on the **Start Conditions** screen.

For more information on setting the start conditions, see:
Start Up pipe function on page C-16
To activate the automatic rerun function on page B-71
Rack Delivery button on page B-288

3 Choose **Start** (on the **Start Conditions** screen). The analyzer performs preparation routine and then begins to process the samples.

■

Processing additional samples

Additional samples can be loaded onto the analyzer at any time. There are two priority levels: STAT (emergency) and routine, where the first takes priority over the second. In either case, test selections for additional samples are downloaded from the Host in realtime.

For information on manual test selections, see *Requesting a test manually* on page B-88.

► To process additional samples

1. Load the additional samples either from the STAT port or on the rack loader (racks placed on a rack tray).
   - If the analyzer is in operation, samples are processed without any further action.
   - If the analyzer is not already in operation, go to step 2.
2. Choose **Start** (global button).
3. Choose **Start** on the **Start Conditions** screen to initiate the run.

Samples loaded from the STAT port are processed before those on the rack loader.

■

For unloading specific racks, see *To unload specific racks* on page B-105.

Processing STAT samples

In this section, we describe the workflow for an analyzer that operates in connection with a Host and is set to process STAT samples in barcode mode.

Reserve rack rotor positions for STAT samples

To ensure that a STAT sample can be processed immediately, reserve positions on the rack rotor for STAT samples on the **Rack Delivery** window (**Utility** > **System** (Page 3/4) > **Rack Delivery**).

Otherwise all positions might be used by routine samples.

For more information, see *Rack Delivery button* on page B-288.

Test selection

Test selection for STAT samples is the same as for routine samples. That is, test selections for samples are downloaded from the Host in realtime but can still be changed from the analyzer's control unit.

For information on changing test selections, see *Requesting a test manually* on page B-88.

Loading STAT samples

Once test selections have been made on your Host system or on the analyzer, load the STAT samples onto the analyzer using the STAT port observing the notes below.

NOTICE

Instrument damage when a rack is inserted wrongly

The instrument normally issues an alarm if a rack was inserted wrongly in the STAT port. However, under certain circumstances a wrong rack direction cannot be detected, which may possibly lead to instrument damage.

- Ensure the correct orientation of the rack when loading it into the STAT port.

► To load STAT samples

1 Prepare red STAT racks with the correct rack numbers according to sample types (such as Ser/Pl, Urine, CSF…).

To verify the correct rack numbers for each sample type refer to the **Rack Assignment** area on the **Utility** > **System** screen.

If a barcode read error has occurred and the rack position has been manually assigned, be sure not to place another barcoded sample in that position.

2 Set the samples in the prepared sample racks. Ensure the sample barcodes are facing the open slot in the rack so the barcode reader can scan them.

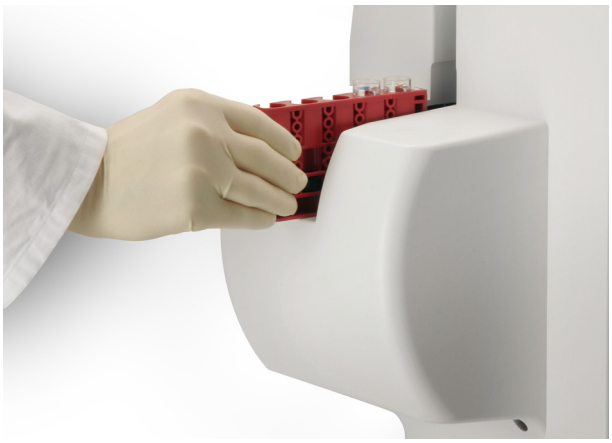

Figure B-39 Loading STAT samples

3 Place the STAT rack in the STAT port carefully observing its correct orientation:

The open slots in the racks must point to the rear of the rack sampler unit. The side of the STAT rack with the barcode label must point to the analyzer.

■

For unloading specific racks, see *To unload specific racks* on page B-105.

Processing reruns

Rerun samples can be processed in two ways, as automatic reruns or as manual reruns.

For information on manual test selections, see *Requesting a test manually* on page B-88.

Automatic reruns

Automatic reruns are performed depending on whether the **Automatic Rerun** check box on **Utility** > **Application** > **Range** is selected or not. If it is, the test is automatically requested for rerun and remeasured each time a result is flagged with a data alarm. Selection of the **Automatic Rerun** check box is an application-specific setting; that is, it has to be set for each individual application.

See *Automatic rerun* on page B-275.

In addition to the application-specific setting, there is a system-wide setting for the automatic rerun function. It is displayed in the **Automatic Rerun** area on the **Start Conditions** window:

See Figure B-38 on page B-68.

- If **Automatic Rerun** is set to **YES**, the application-specific settings are applied; the automatic rerun function is activated.
- If **Automatic Rerun** is set to **NO**, reruns are to be processed manually (regardless of application-specific settings).

When processing reruns automatically, sample racks are kept in the rack rotor until all samples' results are available.

► To activate the automatic rerun function

1. Verify the settings of the **Automatic Rerun** check box on **Utility** > **Application** > **Range** (application-specific).
2. Choose **Start** (global button).
3. Choose **Change** in the **Automatic Rerun** area.

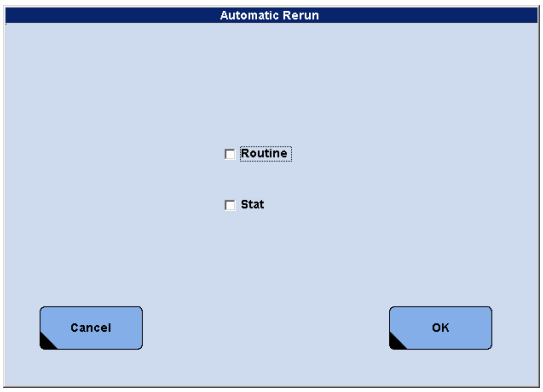

Figure B-40 Automatic Rerun window

4. Choose the **Routine** check box, **Stat** check box, or both to process reruns without operator intervention. **Routine** and **STAT** reruns are selected separately.
5. Choose **OK** to save the rerun setting.

■

Manual reruns

If **Automatic Rerun** is set to **NO** in the **Start Conditions** window, all reruns are to be processed manually (regardless of application-specific settings). This is of advantage when you aim for an optimized throughput because no racks will have prolonged rotor times while waiting for the last test results before they are transferred to the unloader.

To manually rerun samples *in barcode off mode* use pink sample racks for the sample containers. To rerun samples *in barcode mode* use gray sample racks for the sample containers. In case you predilute a sample before you reload it onto the analyzer, make sure to select the **Pre-dilution** check box on **Workplace** > **Test Selection**.

See *Prediluted samples* on page B-73.

Reruns with diluted samples

Tests that need to be rerun can be measured with normal, decreased, or increased sample volumes or with diluted samples.

	c 501 module, photometric unit	c 501 module, ISE unit	e 601 module
Decreased sample volume	✓	✓[(a)]	–
Increased sample volume	✓	–	–
Diluted sample	✓	–	✓

Table B-7 Availability of dilutions for reruns

(a) available only for urine samples as a manual rerun

These dilutions, performed by the analyzer, can either be programmed to be performed automatically, they can be requested manually by the operator or they can be requested by the Host.

Refer to the instructions for use of the respective application for recommended dilutions.

Priority of dilution ratio

If you choose a dilution ratio in the **S. Vol./D.Ratio** field on the **Workplace** > **Test Selection** screen, this selection will overwrite the pre-programmed dilution ratio indicated in the **Utility** > **Application** > **Analyze** screen.

If for example the test has a pre-programmed dilution ratio of 1:5 and you select a dilution ratio of 1:2 for **S. Vol./D.Ratio**, the test is processed with a dilution of 1:2.

Insufficient diluent volume on board

Insufficient diluent for a test entails the following:

- The test will not be masked on the **Test Selection** screen.
- The test with diluted sample will not be performed.
- No alarm will occur.
- An **M** (Mask Test) will be displayed for the test on the **Data Review** window.
- An **M** (Mask Test) will be displayed for the test on the **Data Monitor** report.
- The test without diluted sample will be performed.

Make sure that sufficient module-specific diluents are loaded for the analyzer to dilute samples.

Automatic dilutions

Individual tests can be configured with a dilution for the first run and/or rerun. Dilutions defined in the **cobas** 6000 software are automatically performed and calculated by the system. Administrator access is required to define these dilution parameters.

For more information, see:
Sample Volume area on **Utility** > **Application** screen (photometric tests)
Dilution ratios (e 601) on page B-266

Manually requested dilutions

Dilutions can be requested by the operator. Choose the **Sample Volume / Dilution** box on **Workplace** > **Test Selection** and select **Decrease**, **Increase**, or a dilution ratio (1:1, 1:2, …1:400).

For more information, see *Requesting a test manually* on page B-88.

Request from Host

Dilutions can also be requested by a Host computer. In this case, the samples are in the unloader and have to be reloaded and processed again.

Prediluted samples

Manually prediluted samples are samples which have been prediluted before they were put on the analyzer. (These are not to be confused with manually *requested* dilutions.)

Samples which have been manually prediluted can be measured, but the corresponding dilution factors are NOT taken into consideration when the results are calculated by the system. It is the operator's responsibility to calculate the final results.

For manually prediluted samples, make sure that you first select the **Pre-dilution** check box on **Workplace** > **Test Selection**. When the **Pre-dilution** check box is selected, results are flagged with *P* on the monitor report. The check mark is also visible in the **Pre-dilution** check box on **Workplace** > **Data Review** > **Test Review**. Predilution is also indicated in the results sent to the host.

Checking results

As results are generated on the instrument, they are saved in the database located on the internal hard disk of the control unit. When all results for all the tests requested for a sample are available, the analyzer sends them to the Host where they can be validated.

To view or edit results on the analyzer, use the **Workplace** > **Data Review** screen; all test results in the database are displayed here.

For more information, see:
Chapter 9 *Orders and results*
Data Review screen on page B-93
Archiving patient data on page B-96
Editing or deleting sample data on page B-98
Tracking samples on the analyzer on page B-103

When checking results, it can become necessary to locate a certain sample for further inspection. If a sample is still on the analyzer, use **System Overview** > **Sample Tracking** to locate it.

Sample tracking

The **Sample Tracking** window allows the operator to search for any sample on the analyzer from the moment of registration (the sample has passed the barcode reader) to the moment when the sample reaches the rack unloader (Tray 1).

The **Sample Tracking** window also allows the operator to search for samples and subsequently unload them.

The location of a sample is indicated by the **Sample Tracking** window only when the sample tray has not been removed from the unloader and no new run has been started yet.

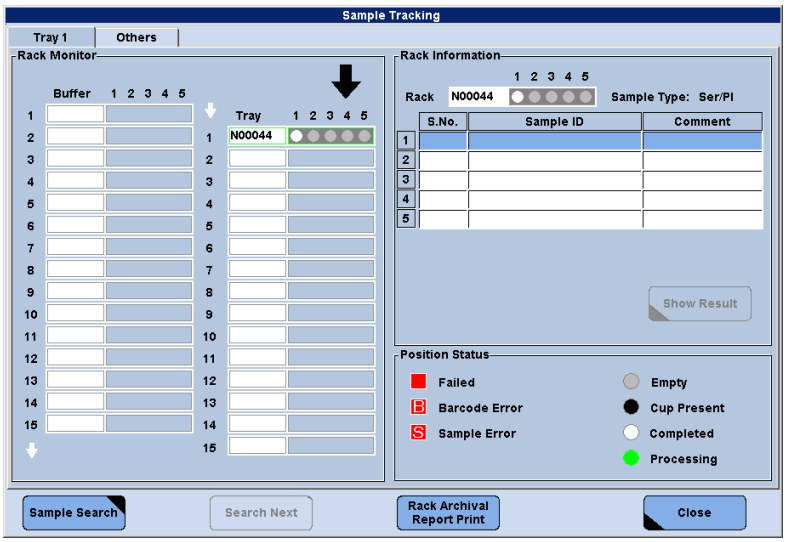

Figure B-41 Sample Tracking window

The **Sample Tracking** window has two tabs, the **Tray 1** tab and the **Other** tab.

Tray 1 tab

The **Tray 1** tab provides an overview of all racks in the unloader. The **Rack Information** area on the right side of the screen displays detailed information about each sample in the rack selected on the **Tray 1** tab.

Statuses displayed in the **Sample Tracking** window comprise the following:

	Failed	Measurement is completed and one or more results have a data alarm, or a test could not be processed.
B	**Barcode Error**	The barcode is unreadable (displayed in barcode mode only).
S	**Sample Error**	Possible reasons for sample error are: • Sample short • Air bubbles (only for **e** 601) • Sample clot
	Empty	The selected rack position is empty.
	Cup Present	A cup is present but no request has been made.
	Completed	The sample is completed with no flags.
	Processing	The sample is being processed.

For more information, see *Tracking samples on the analyzer* on page B-103.

Others tab

The **Others** tab provides information about racks and samples that are already registered by the analyzer (have passed the barcode reader) but have not yet reached the unloader.

In the **Others** tab the status *Cup present* is used instead of *Processing*, *Completed* or *Failed*.

For detailed information, see:
Tray 1 tab on page B-75
Tracking samples on the analyzer on page B-103

Printing sample information

Sample information in the database can be printed if necessary. The **Data Monitor/Report** displays all test information about a sample ID, tests performed and results measured, for example.

► To print a Data Monitor/Report report

1 Choose **Workplace** > **Data Review**.

2 Select a single sample, a range of samples or nonconsecutive samples to be printed from the sample list on the left side of the screen.

3 Choose **Print** (global button) > **Work Place**.

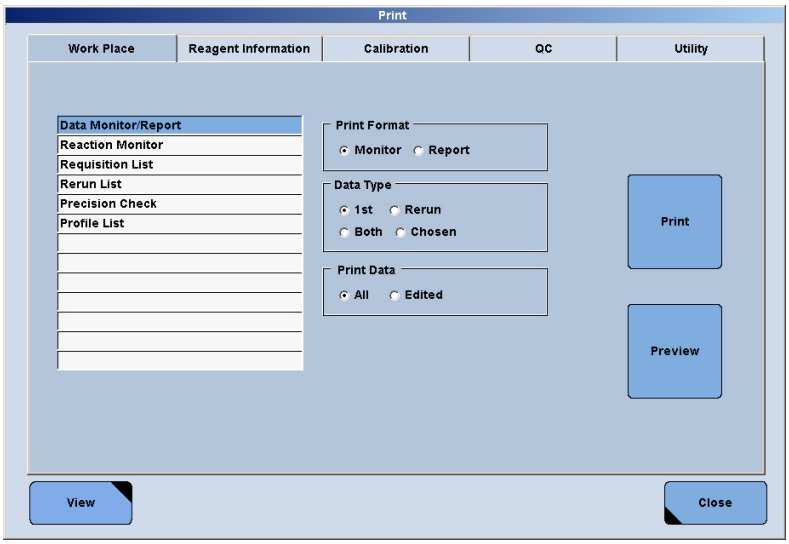

Figure B-42 Workplace Print screen

4 Choose **Data Monitor/Report** in the report list.

5 Select the desired print format, **Monitor** or **Report**, from the **Print Format** area.

Results with exception data alarms (**Utility** > **System** (**Page 4/4**) > **Review By Exception**) are not printed in the **Report** format.

6 Select the appropriate result option, **1st**, **Rerun**, **Both** or **Chosen**, from the **Run Type** area.

7 Choose **All** in the **Print Data** area to print all results on the currently selected sample(s) or choose **Edited** to select printing of only edited results of the currently selected sample(s).

8 You can display the currently selected report on the screen without printing or you can print the report:

- To display a preview of the currently selected report, choose **Preview** and then **View**.
- To print the report, choose **Print**.

■

Sampling Stop

After all test requests are completed, sampling stops. After the last result is calculated, the analyzer remains in the **Rack Collect End** status for a set span of time. Thereafter, finalization for the **e** 601 is performed and then the entire analyzer goes into standby.

The span of time between operation and standby is specified under **Utility** > **System** (**Page 3/4**) > **Rack Delivery**. If the **Rack Reception Mode** check box is cleared, the analyzer goes into standby immediately after the last result is calculated.

For more information, see *Rack Reception Mode* on page B-288.

Shutting down the analyzer

This section discusses the tasks to be performed at the end of analysis. It gives a detailed description of the analyzer shutdown including both the complete shutdown and the sleep mode.

Maintenance before shutdown

At the end of routine operation, it is important that all required maintenance is performed. In addition to the routine daily maintenance, this could also include other scheduled maintenance—for example, weekly and monthly maintenance.

For information about maintenance items to be performed, refer to your laboratory maintenance schedule and see the following maintenance chapters:
Chapter 15 *General maintenance*
Chapter 17 *Maintenance c 501 with ISE*
Chapter 18 *Maintenance e 601*

Analyzer shutdown

After routine operation is finished and all required maintenance has been performed, the analyzer can be shut down. There are two options for the analyzer shutdown:

- Entering sleep mode
- The complete shutdown

Entering sleep mode provides the possibility of an automatic analyzer start-up on the next day. Thus, the analyzer can perform initialization in the absence of an operator, before the beginning of a working session. When the operator arrives, the analyzer is ready for operation.

For more information on automatic start-up, see *Start-up* on page B-35.

Perform one of the following procedures to shut down the analyzer after all required maintenance has been performed.

► To enter sleep mode

1 Check that sufficient reagents and auxiliaries are on board for the next start-up.

Choose the wake-up time and select any **Power Up pipe** function required (**Utility** > **System** (**Page 2/4**) > **Power Up Pipe Setting**).

See *Power Up Pipe function* on page C-15.

2 Choose **Shut Down** (global button) to display the **Shut Down** window.

3 Select the **Sleep** option and choose **Execute**. The **Sleep** window is displayed.

4 Select one of the following options:

- Select **Regulation** to let the system wake up at the preset time.
- Select **exception** and enter the date and time when the system should wake up.

The instrument is put in sleep mode until the wake-up time. The wake-up time is displayed.

5 Perform the regular checks after shutdown.

See *Checks after shutdown* on page B-80.

■

For **cobas** 6000 systems, the complete shutdown procedure should be performed at least once a week.

► To shut down the analyzer

1 Choose **Shut Down** (global button) to display the **Shut Down** window.

2 Select the **Shut Down** option, choose **Execute** and confirm the shutdown.

3 Wait until the computer power supply turns off. Then, switch off the power switch of the printer and monitor.

CAUTION! Damage to the control unit or data loss. Before switching-off of the analyzer, make sure the monitor indication has changed from shutdown to a state where nothing is displayed.

4 Switch off the operation power switch on the left side face of the rack sampler unit.

5 Turn off the water supply.

■

After shutting down the analyzer, check individual parts of the instrument according to the given maintenance recommendations.

See *Checks after shutdown* on page B-80.

Checks after shutdown

The checks and maintenance actions after shutdown correspond to the analyzer conditions that are to be checked before start-up.

See *Starting inspection* on page B-34.

Especially if the analyzer has been set for automatic start-up, it is important that the checks before start-up are done at the end of the previous working session; otherwise, problems may occur.

Laid out below is the list of analyzer conditions that are to be checked before start-up:

Control unit
- ☐ There is no floppy disk; CD or DVD in the corresponding drive.
- ☐ There is sufficient paper in the printer.

Core unit
- ☐ The water supply is switched on.
- ☐ Container for high concentration waste is empty.
  Dispose of the contents of the waste tank according to your laboratory's biohazardous waste disposal regulations.
- ☐ There are no racks on the rack loader, unloader, rack rotor, or conveyor line.
  Dispose of samples, calibrators, and QC material according to local regulations.

Analytic modules
- ☐ All surfaces are clean and clear of loose articles.
- ☐ No tubing is pinched or bent.
- ☐ Syringes are not leaking.
- ☐ Auxiliary reagents (cleaning solutions) required for start-up pipes are loaded.

***c** 501 module – ISE unit*
- ☐ All electrode cables and tubings are correctly connected. Tubing is not leaking.

***c** 501 module – photometric unit*
- ☐ All reagent cassettes are removed from the cassette disposal.
  Dispose of the reagent cassettes from the cassette disposal according to local regulations.
- ☐ Top cover is closed and locked.

***e** 601 module*
- ☐ The magazine door and drawer are closed.

Orders and results

This chapter provides descriptions of special tasks that are usually not part of the daily workflow. It is meant to complement the chapter Daily operation, where everyday tasks and common procedures for running the **cobas** 6000 analyzer are described.

In this chapter

Chapter **9**

Overview B-83
Barcode and non-barcode mode B-84
Test Selection screen B-85
Test selection matrix B-86
Colors B-86
Markings B-87
Requesting a test manually B-88
Entering unreadable sample barcodes B-91
Assigning or deleting a rerun rack manually B-92
Data Review screen B-93
Information on the screen B-94
Sample selection list B-94
Test results list B-95
Archiving patient data B-96
Editing or deleting sample data B-98
Displaying archived patient data B-100
Calib. Review screen B-101
Deleting a calibrator or a calibrated test B-102
Tracking samples on the analyzer B-103

Overview

The following sections describe tasks and data that can be accessed by the screens under the **Workplace** menu. The **Workplace** menu contains three screens: The **Workplace** > **Test Selection** screen, the **Workplace** > **Data Review** screen and the **Workplace** > **Calib. Review** screen.

However, this chapter does not cover all possible commands. For a complete description of all fields of the software's user interface, refer to the *Online Help*.

Workplace > Test Selection screen

Use this screen to enter test selections and demographics for a sample. The available fields for sample identification vary, depending whether STAT or routine test selections are being entered and whether the analyzer is operating in barcode mode or not.

For information on special operation procedures, see:
Requesting a test manually on page B-88
Entering unreadable sample barcodes on page B-91
Assigning or deleting a rerun rack manually on page B-92

Workplace > Data Review screen

Use this screen to perform tasks related to reviewing and editing routine and STAT results. Control results can also be viewed here. Other tasks that can be performed from this screen include editing demographic information, sending data to the Host, deleting data individually or in batches, backing up data and editing data.

For information on special operation procedures, see:
Archiving patient data on page B-96
Editing or deleting sample data on page B-98
Displaying archived patient data on page B-100
Tracking samples on the analyzer on page B-103

Workplace > Calib. Review screen

Use this screen to review the status of the calibrators that are currently processing and the status of the calibrations.

For information on special operation procedures, see *Deleting a calibrator or a calibrated test* on page B-102.

For a complete description of all fields and commands under the **Workplace** menu, refer to the *Online Help*.

Barcode and non-barcode mode

In barcode mode, the instrument uses barcodes to identify samples. You employ the same barcodes throughout your whole laboratory workflow to track the samples' identities. In non-barcode mode, the instrument identifies samples by the sequence that you place samples on racks. You must organize this sequence of the samples manually or with your host to track the samples' identities.

Barcode mode

Barcodes are used for identifying samples, calibrators, and QC material. In barcode mode, the barcode number is the sample ID.

Barcodes for samples can be generated by your laboratory-wide barcode labeling and printing system. Barcodes for calibrators and QC material are supplied inpack.

To minimize the risk of confusing samples, we strongly recommend operating the instrument in barcode mode.

If the barcode mode is activated, it is still possible to process single samples without barcodes. In this case, you use the **Barcode Read Error** window to enter a rack ID and rack position for these samples.

If non-barcoded samples have been aliquoted on a preanalytical system, the barcode mode is also used. In this case, the instrument receives the sample ID, rack ID, and rack position number together with the test order.

For more information, see:
Barcode types on page A-118
Entering unreadable sample barcodes on page B-91
Requesting a test manually on page B-88

Non-barcode mode

The instrument uses an internal worklist to track the sequence of samples. On the worklist, samples are sequentially numbered and assigned to racks by rack ID and rack position.

You can generate a worklist manually by ordering tests on the **Test Selection** screen and entering a sample sequence number. Also, the worklist can be generated by the host.

The requisition list represents the internal worklist.

The instrument uses only the sample sequence number to identify samples. Optionally, you can still assign a sample ID, which can be text, to help identify samples.

Test Selection screen

To display this screen, choose **Workplace** > **Test Selection**.

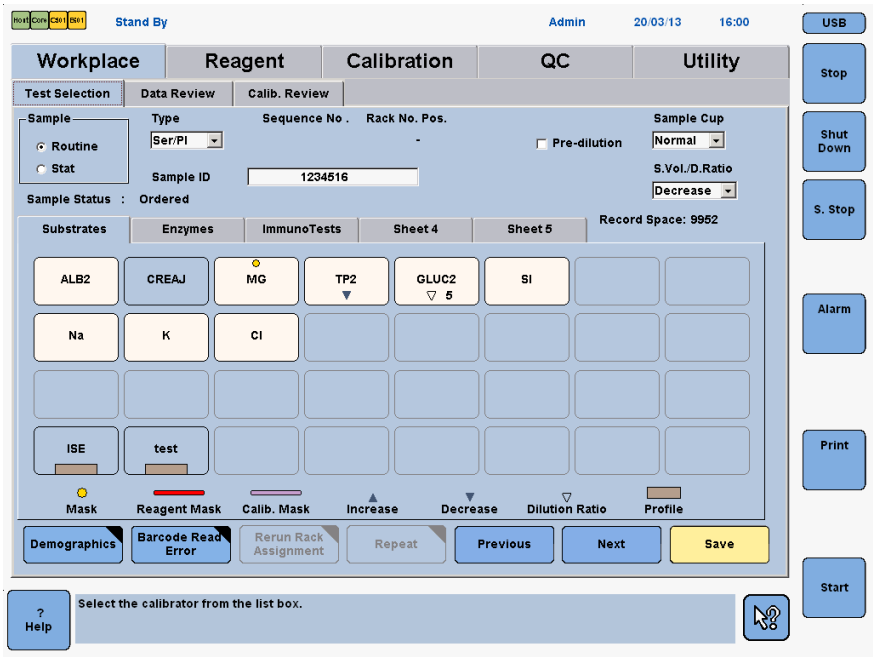

Figure B-43 Test Selection screen

Use this screen to manually enter test selections and demographics for a sample. The available fields for sample identification vary, depending whether STAT or routine test selections are being entered and whether the analyzer is operating in barcode mode or not.

Fields	Barcode mode		Non-barcode mode	
	Routine	Stat	Routine	Stat
Sequence No.	–	–	✓	–
Rack No. / Pos.	–	–	–	✓
Sample ID	✓	✓	✓	–

Table B-8 Test Selection screen - available fields for sample identification

If test selections are downloaded from a Host, this screen is commonly not used.

For more information about the different sample information fields and the buttons on this screen, refer to the *Online Help* of the particular field or button.

For information, see:
Test selection matrix on page B-86
Requesting a test manually on page B-88
Entering unreadable sample barcodes on page B-91
Assigning or deleting a rerun rack manually on page B-92

Test selection matrix

A maximum of 160 test keys can be programmed on the system. The test matrix has 32 keys in each group and up to 5 groups of test keys can be programmed on **Utility** > **System** (**Page 1/4**) > **Key Setting**. One group at a time is displayed on the **Test Selection** screen. Use the tabs above the test matrix to switch between the groups. Group names are defined on **Utility** > **System** (**Page 1/4**) > **Key Setting**.

For more information about Key Setting, refer to the *Online Help*.

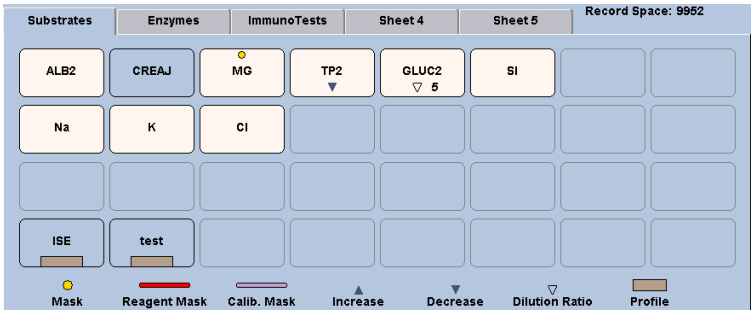

Figure B-44 Test matrix

Colors

The test keys display different colors to indicate the status of the test for the sample ID in the **Sample ID** text box. The following colors are available:

This test has been selected.

This test has been performed, a result is available, and can be ordered again.

A rerun has been performed for this test and the result is available.

Markings

One test or profile can be assigned to each key. The test keys display special markings depending on the test's status or programming. The different markings and their meanings are outlined below:

Blank test key indicates no test is assigned.

CHOL

Test key with a test or profile name and no masking indicators can be requested, further settings are not required. The reagent is on board and registered.

Mask

- Test manually masked on the **Masking** window (**Start** (global button) > **Masking**, **P**- or **T**-**mask** on all measuring cells for **e** 601)
- All modules which have this test on board are deactivated

The test can be requested. However, the test is performed only after the test is manually unmasked

Reagent Mask (no reagent available)

Test is automatically masked by the system. The volume of a reagent (**cobas c** pack or **cobas e** pack), or detergent cassette, that is required for the respective test is either insufficient or the reagent is not present on the analyzer. The test can be requested.

c 501: If a diluent **cobas c** pack or other wash solutions are empty or missing (Sample Cleaner 1, Sample Cleaner 2, or ProbeWash), the corresponding reagent is **not** masked.

e 601: If the necessary diluent or pretreatment are empty or missing, the corresponding test is masked.

Calib. Mask (calibration failed)

Test is automatically masked by the system due to a failed or missing calibration.

The purple bar will not be displayed on the test key if:

- Calibration auto masking setting for the individual test is not selected on **Utility** > **Application** > **Calib**.
- Calibration auto masking setting for the analyzer is not selected on **Utility** > **System** (**Page 2/4**) > **Calib Mask Setting**.

Increase (**c** 501)

Test will run with an increased sample concentration as set on the **Utility** > **Application** > **Analyze** screen.

The symbol disappears as soon as the result is generated.

Decrease

Test will run with a decreased sample concentration as set on the **Utility** > **Application** > **Analyze** screen.

The symbol disappears as soon as the result is generated.

Dilution Ratio

Test will run with a dilution. The number after the triangle indicates the dilution factor (for example, 2 indicates a 1:2 dilution).

The symbol disappears as soon as the result is generated.

Profile

A brown bar on the key indicates the key has been assigned a profile. When selected, all tests assigned to that profile are highlighted.

Requesting a test manually

Tests can be manually selected for STAT and routine samples when the analyzer is in either barcode or non-barcode mode.

- Application-specific dilutions are performed automatically by the system.
- Not all dilution ratios are available.
- If you choose a dilution ratio in the **S. Vol./D.Ratio** field, this selection will overwrite the pre-programmed dilution ratio indicated in the **Utility** > **Application** > **Analyze** screen.
  If for example the test has a pre-programmed dilution ratio of 1:5 and you select a dilution ratio of 1:2 for **S. Vol./D.Ratio**, the test is processed with a dilution of 1:2.
- For **c** 501, if the sample volume of a test is higher than 20 µL, a manually requested dilution is not accepted and a pop-up window is displayed.
- The **e** 601 cannot pipette increased sample volume.
- For **e** 601 assays there is a recommended dilution described in the instructions for use. Only these dilutions should be used.

All manual selections such as sample type and dilution ratio remain as selected, within and between samples, until they are manually reset.

Micro cups are not to be used on the **e** 601.

► To request a routine sample

1. Choose **Workplace** > **Test Selection**.
2. Select the sample type.

   Only the available tests for the corresponding sample type are displayed in the test matrix.
3. Select the **Routine** option from the **Sample** area on the top left of the **Test Selection** screen.
   - In non-barcode mode the cursor moves to the **Sequence No.** text box. Go to step 4.
   - In barcode mode the cursor moves to the **Sample ID** text box. Go to step 5.
4. Type in the sequence number for the sample in the **Sequence No.** text box and press <Enter>. The cursor moves to the **Sample ID** box.
5. Type in the sample ID of the sample in the **Sample ID** box and press <Enter>. The cursor moves to the **Pre-dilution** check box.
6. Select this check box if the sample has already been diluted and press <Enter>. The cursor moves to the **Sample Cup** box.
7. Select the sample container type and press <Enter>. The cursor moves to the **Sample Volume / Dilution** box.
8. Select the necessary dilution, if any, for the sample and press <Enter>. The cursor moves to the test key matrix.
9. Select the test, combination of tests or test profiles for the sample. Selected tests and profile keys appear white.
10. Choose **Save** to save the test selection.

■

► To request a STAT sample

1. Choose **Workplace** > **Test Selection**.
2. Select the sample type.

   Only the available tests for the corresponding sample type are displayed in the test matrix.
3. Select the **Stat** option from the **Sample** area on the top left of the **Test Selection** screen.
   - In non-barcode mode the cursor moves to the **Rack ID** text box. Go to step 4.
   - In barcode mode the cursor moves to the **Sample ID** text box. Go to step 6.
4. Type in the rack ID of the sample in the **Rack ID** text box and press <Enter>. The cursor moves to the **Pos.** text box.
5. Type in the position number of the sample in the **Pos.** text box and press <Enter>. The cursor moves to the **Sample ID** text box.
6. Type in the sample ID of the sample in the **Sample ID** text box and press <Enter>. The cursor moves to the **Pre-dilution** check box.
7. Select the **Pre-dilution** check box if the sample has already been diluted and press <Enter>. The cursor moves to the **Sample Cup** box.
8. Select the sample container type and press <Enter>.

   The cursor moves to the **Sample Volume / Dilution** box.
9. Select the necessary dilution, if any, for the sample and press <Enter>. The cursor moves to the test key matrix.
10. Select the test, combination of tests, or test profiles for the sample. Selected tests and profile keys appear white.
11. Choose **Save** to save the test selection.

■

Entering unreadable sample barcodes

⚠ CAUTION

Incorrect results due to sample mismatch

If samples with unreadable barcodes are entered manually, sample mismatch may occur.

- When registering samples with unreadable barcodes, make sure to select the correct sample. Check the rack and position number of the affected sample.

The **Barcode Read Error** screen is only available in barcode mode.

► To enter a samples with unreadable barcode

1 Choose **Workplace** > **Test Selection**.

2 Choose **Barcode Read Error**.

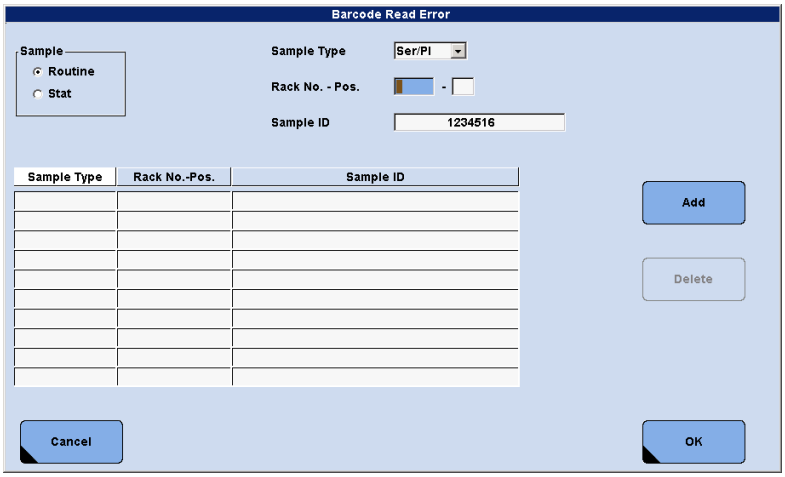

Figure B-45 Barcode Read Error window

3 Select the sample type (**Stat** or **Routine**) in the **Sample** area and press <Enter>.

4 Select the sample material from the **Sample Type** list box and press <Enter>.

5 Type the rack no. and position in the **Rack No.-Pos.** text boxes and press <Enter>.

6 Type the sample ID of the sample in the **Sample ID** text box and press <Enter>.

7 Choose **Add**. The sample type, rack number and position, and sample ID are displayed.

8 Repeat steps 3 to 7 for any further samples with a barcode read error.

9 Choose **OK**.

■

The non-read position assignments are deleted once the rack(s) to which samples are assigned are scanned by the rack ID reader. Therefore, once the rack is read it can be re-used for different samples. If it is necessary to run these samples again, the position assignment must be re-entered if the barcode has not been replaced.

Assigning or deleting a rerun rack manually

Samples requested for a rerun are only manually assigned to a rack when the analyzer is in non-barcode mode. Use the pink rerun racks for reruns in non-barcode mode.

► To assign a rerun rack

1 Choose **Workplace** > **Test Selection**.

2 Type the sample ID of the sample in the **Sample ID** text box or type the sequence number of the sample in the **Sequence No.** text box.

If any changes have to be made to the test selection and/or sample dilution, they can be done at this time.

3 Choose **Rerun Rack Assignment** to display the **Rerun Rack Assignment** window.

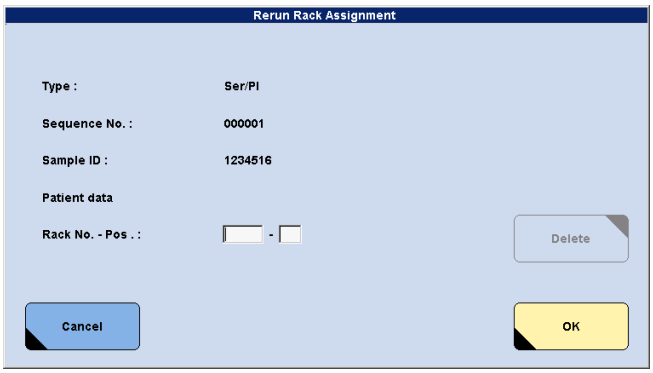

Figure B-46 Rerun Rack Assignment window

4 Check that the details displayed on the **Rerun Rack Assignment** window are correct.

5 Type the rack No. and position of the pink rerun rack in the **Rack No.-Pos.** text boxes.

6 Choose **OK**.

■

► To delete a rerun rack

To reassign a rerun, the old assignment must be first deleted, and then the new rack ID and position entered.

1 Select the sample that you need to reassign from **Workplace** > **Test Selection**.

2 Choose **Rerun Rack Assignment**.

3 Choose **Delete** to delete the rack assignment after confirmation.

4 Choose **Cancel** to close the **Rerun Rack Assignment** window.

■

Data Review screen

To display this screen, choose **Workplace** > **Data Review**.

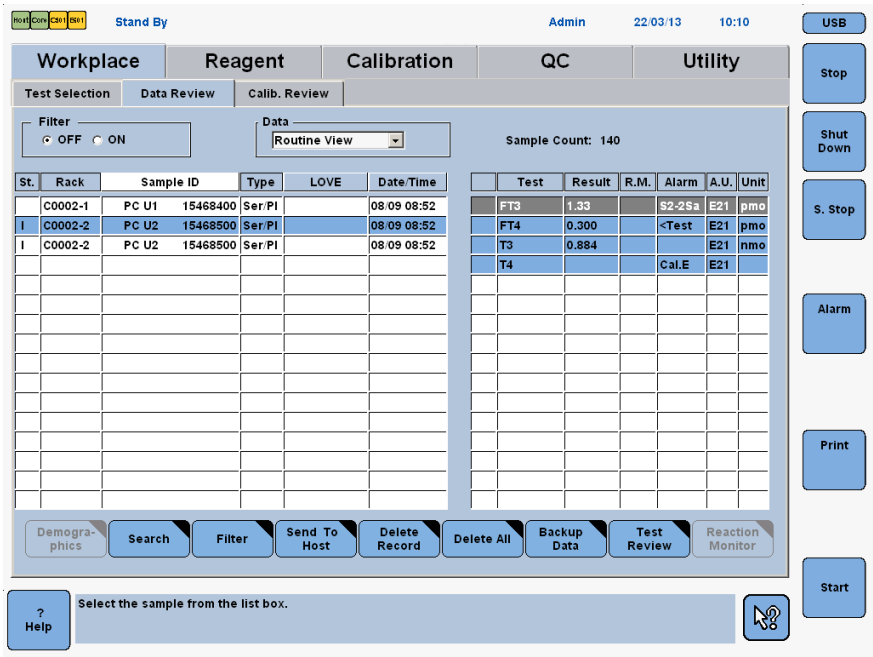

Figure B-47 Data Review screen (barcode mode)

Use this screen to perform tasks related to reviewing and editing routine and STAT results. Control results can also be viewed here.

Other tasks that can be performed from this screen include editing demographic information, sending data to the Host, editing, searching, filtering, and deleting data individually or in batches, and backing up data.

For more information about the different sample information fields and the buttons on this screen, refer to the *Online Help* of the particular field or button.

For information on special operation procedures, see:
Archiving patient data on page B-96
Editing or deleting sample data on page B-98
Displaying archived patient data on page B-100
Tracking samples on the analyzer on page B-103

Information on the screen

This section describes the information on the **Data Review** screen.

Sample selection list

The list on the left side of the screen displays the patient and control samples registered by the system. Its content varies depending on whether barcode mode, or non-barcode mode is selected on **Utility** > **System**.

The St. column displays the sample status codes:

O (Ordered)	Sample registered by user or Host.
P (Processing)	Sample ID or rack ID has been read by barcode reader.
I (Incomplete)	Samples processed, but a data alarm is present.
No symbol (Complete)	Sample successfully processed. All test results are available without a data alarm.
H (Sent to Host)	Sample results have been sent to the Host.
#	Sample has been pipetted on ISE or **c** 501. Note that additional measurements on the **e** 601 might be affected by carryover (see following note).
b	Sample has been processed on **c** 501. A special wash for the sample probe of the **c** 501 has been performed before the sample was pipetted.

Possible sample carryover when measuring high-priority elecsys (HPE)

If HPE tests are requested for a sample, this sample is pipetted on the **e** 601 module prior to pipetting on **c** 501 module.

If a sample has already been processed on the **c** 501 module, a #-flag is displayed on the **Data Review** screen. This indicates the risk of potential carryover if sample from this sample container is used for additional or rerun HPE requests.

- If a #-flag is displayed, always use newly aliquoted samples to perform manual reruns of HPE tests.

For more information about special washes, see:
Programming a special wash for c 501 modules on page B-301
Programming a special wash for e 601 modules on page B-308

For control samples only the following statuses are available: **P**, **I**, **H** and no symbol (complete).

Test results list

⚠ CAUTION

Incomplete test result displayed due to a too narrow column width

Characters in the **Result** column can be hidden if the column width is set too small. As a consequence, the test results can be misinterpreted.

- Check that all characters in the **Result** column are displayed.
- Adjust the column width by selecting the column dividers in the list head and dragging them to the left or right.

The list on the right side of the screen displays the results of the tests performed on the sample currently selected in the sample selection list. The results are displayed in this **Test Result** list as soon as they are available.

A symbol for the volumes to be used is displayed to the left of the **Test** column.

The symbols for the volumes disappear as soon as the result is generated. Information about the sample concentration (dilution ratio) is still displayed in the **Test Review** window.

■ (Dark blue): Indicates a test to be run with normal sample concentration.

▲ (Dark blue): Indicates a test is marked to be run with an increased sample concentration. This applies to photometric assays (**c** 501 module) only.

▼ (Dark blue): Indicates a test is marked to be run with a decreased sample concentration. This applies to photometric assays and ISE tests (**c** 501 module) only. For ISE tests only urine samples can be run with decreased volume.

▽ (White): Indicates a test is marked to be run with a diluted sample.

A hash (#) indicates a sample with potential sample carryover. This sample has been processed on a **c** 501 in the first run. In a possible second run a test is requested which would have required a special wash for the sample probe of the **c** 501 module. The hash (#) appears as a warning for a potential sample carryover together with the *Samp.O* alarm.

If an add-on test is ordered for a sample it is displayed as ordered and a blue square in the first column to the left of the **Test** column is displayed.

The **R.M.** column displays a result message. Reactive (**r**), non reactive (**n**) or borderline (**b**) indicates if a test for a qualitative assay has a positive, negative or borderline result, respectively.

The **A.U.** column displays the analytical unit (analytical module) for the test of the selected sample.

Results <Test

In case the **Suppress Result <Test** (**Utility** > **System** > **Alarm** (**Page 1/4**)) is activated and the measurement result is below the technical limit, the lower limit of the technical limit is displayed as the result flagged with a data alarm. The displayed data alarm depends on the data alarm priority.

For information on the data alarm priority, see *Data alarm priority* on page D-8.

Number of runs

Please note the number of runs (1st., Rerun) is test-oriented, not sample-oriented.

If a test has already run twice and a third request is made, the result of the second run is replaced by the result of the third run. An additional run (3rd., 4th., and so on) is only possible, if the previous result has been uploaded to the Host and the **3rd Results Acceptance** checkbox (**Utility** > **System**) is enabled.

If Host communication is not available, it is not possible to use **3rd Results Acceptance**.

For more information about **3rd Results Acceptance**, see *Generating multiple results for a single test* on page B-284.

Archiving patient data

Patient data can only be archived when the system is in standby.

► To archive patient data

1 Choose **Workplace** > **Data Review**.

2 Select the samples for which data is to be backed up from the list on the left of the **Data Review** screen.

3 Choose **Backup Data** to display the **Backup Data** window.

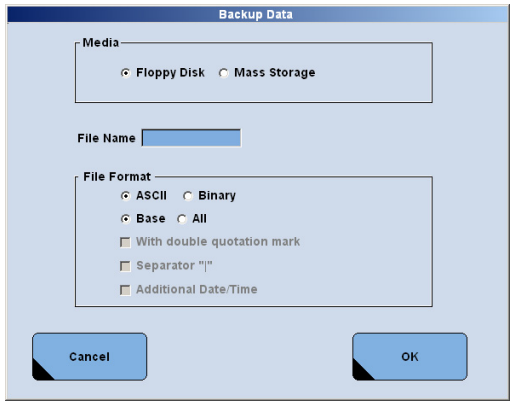

Figure B-48 Backup Data window

4 Select the medium to which the data will be written, for example **Floppy Disk**, from the **Media** area.

Option	Description
Floppy Disk	Select this option to write the data to a floppy disk.
Mass Storage	Select this option to write the data to a mass storage. If a **USB** storage device is inserted, the instrument uses the USB as mass storage. If no USB storage device is inserted, the instrument uses a DVD disk as mass storage.

Table B-9 Media area

5 Insert the chosen medium into the corresponding disk drive.

6 Type the name to be given to the file in the **File Name** text box.

7 Select the format in which the data is to be written, **ASCII** or **Binary**, and select **Base** or **All** option in the **File Format** area.

- ASCII files can be read by other PC systems, but cannot be reloaded in to the **cobas** 6000 system.
- Binary files can be reloaded in to the **cobas** 6000 system but cannot be read by other PC systems.
- When the **Base** option is selected, no data from **e** 601 tests are saved.

8 Choose **OK** to back up the selected data after confirmation. The **Save Data** window is displayed. This closes after the data has been backed up.

If a confirmation window with the message *Mass storage media is full or Floppy disk is full* is displayed during backup, no data is stored on the media.

Insert an empty medium and repeat the backup process

■

For more information about the different backup options, refer to the *Online Help of **Backup Data** window*.

For more information on using DVD disks, see *Preparing a DVD disk* on page B-248.

Editing or deleting sample data

Sample data displayed on the **Data Review** screen can be edited or deleted if required. Use the following procedures to edit or delete sample data.

► To select a result to be edited or deleted

1 Choose **Workplace** > **Data Review**.

2 Select **Routine View** from the **Data** list box.

QC View is also available as an option in the list box in the **Data** area, but this view displays only QC data.

For information on using a **Backup Disk**, see *Displaying archived patient data* on page B-100.

3 Select a sample from the list on the left of the screen. The results, 1st and Rerun, of the tests performed on this sample are displayed in the list on the right of the screen.

4 Choose **Test Review** to display the **Test Review** window. This window displays more information on the test results.

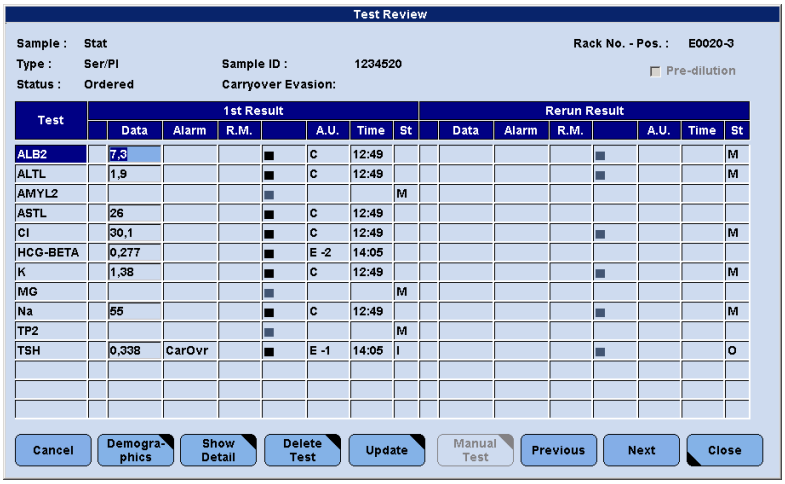

Figure B-49 Test Review window

5 Select the test result in the **Data** column. The result is activated (blue background) and highlighted white.

■

The **St.** column displays the status code of the test result.

O (Ordered)	Test requested by user or Host.
P (Processing)	Sample ID or rack ID has been read by core.
I (Incomplete)	Test processed, but a data alarm is present.
No symbol (Complete)	Test successfully processed.
H (Sent to Host)	Test results have been sent to the Host.
M (Masked Test)	Test has been masked due to an abnormality during processing. Displayed only on **Workplace** > **Data Review** > **Test Review**.
	Test has not been performed due to missing dilution. However, a test request without dilution will be performed and the test is not masked on the **Workplace** > **Test Selection** screen.
E (Edited Test)	Test results have been manually edited on **Workplace** > **Data Review** > **Test Review**.

The status of Ordered, Masked and Edited Test is not applied to control samples.

► To edit sample data

1 Select the test result to be edited.

2 Enter the new result (the old result is overwritten) and press <Enter>. The **Updated** button turns yellow.

3 Choose **Update** to save the changes or **Cancel** to reset the entry to the original value.

■

Edited test results are flagged with an *Edited* data flag.

► To delete sample data

1 Select the test result to be deleted.

2 Choose **Delete Test** to delete the test after confirmation.

■

► To delete a sample from the Data Review screen

1 Choose **Workplace** > **Data Review**.

2 Select an individual sample, or a number of samples, to delete from the list on the left of the screen.

3 Choose **Delete Record** to delete the sample(s) selected after confirmation.

■

The **Sample Count** is unchanged after a record has been deleted. To delete all records, use **Delete All**. This will reset the sample count to 0.

Displaying archived patient data

Only data saved in binary format can be reloaded onto the analyzer.

Archiving patient data on page B-96

Reloaded data can only be viewed on the **Data Review** screen.

► To display archived patient data

1 Select **Backup Disk** from the **Data** list box on the **Workplace** > **Data Review** screen to display the **Read Back Up Disk** window.

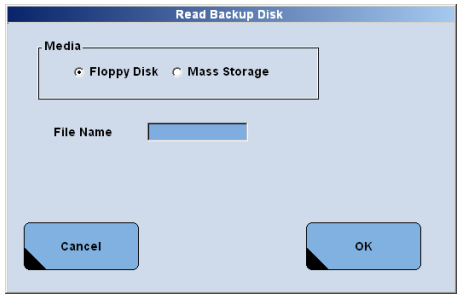

Figure B-50 Read Backup disk window

2 Select the medium from which the data will be read, for example **Floppy Disk**, from the **Media** area.

If only one medium is available, for example, floppy disk, the **Media** area is not active.

3 Insert the chosen medium into the corresponding disk drive.

4 Type the file name in which the data is saved in the **File Name** text box.

5 Choose **OK**. The saved data is displayed on **Workplace** > **Data Review**.

■

Calib. Review screen

To display this screen, choose **Workplace** > **Calib. Review**.

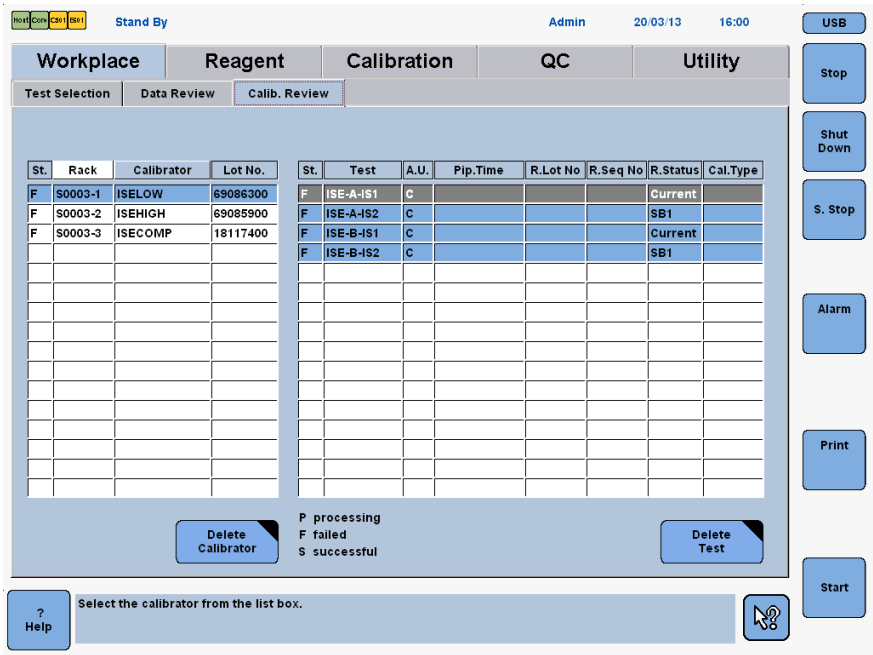

Figure B-51 Calib. Review screen

Use this screen to review the status of the calibrators that are currently processed and the status of the calibrations.

- For more information about the different sample information fields and the buttons on this screen, refer to the *Online Help* of the particular field or button.
- For information on special operation procedures, see *Deleting a calibrator or a calibrated test* on page B-102.

Calibrator selection list

The list on the left side of the screen displays the calibrators registered by the analyzer.

The **St.** column displays the calibrator status codes:

P (Processing)	The calibrator is registered by the analyzer (barcode is already read).
F (Failed)	At least one of the calibrations performed with this calibrator could not generate a valid calibration.
S (Successful)	Calibrator successfully processed. All calibrations performed with this calibrator have generated valid calibration results.

Test results list

The list on the right side of the screen displays detailed information for the tests performed with the calibrator currently selected in the calibrator selection list.

The **St.** column displays the calibration status codes:

P (Processing)	The calibrator for the test is registered by the analyzer (barcode is already read) and at least one calibration is requested for this calibrator. If the calibrator has already been pipetted by the analyzer, a pipetting date and time is available.
F (Failed)	No valid calibration has been generated for the test.
S (Successful)	A valid calibration has been generated for the test.

For more information about the calibration status, see *Calibration Status screen* on page B-170.

Deleting a calibrator or a calibrated test

Calibrator data displayed on the **Calib. Review** screen can be deleted if required during operation. Use the following procedures to delete the status of a calibrator or a test. If you start the system from stand by this screen is reset and all information is deleted.

► To delete a calibrator

1. Choose **Workplace** > **Calib. Review**.
2. Select a calibrator, to delete from the list on the left of the screen.

   The calibrator is highlighted in blue.
3. Choose **Delete Calibrator** to delete the calibrator after confirmation.

■

► To delete a test (c 501)

1. Choose **Workplace** > **Calib. Review**.
2. Select a test, to delete from the list on the right of the screen.

   The calibration test is highlighted in blue.
3. Choose **Delete Test** to delete the calibration test after confirmation.

■

Tracking samples on the analyzer

The **Sample Tracking** window allows the operator to search for any sample on the analyzer from the moment of registration (the sample has passed the barcode reader) until the moment the sample is removed from the rack unloader (**Tray 1**) and no new run was started.

See *To track a sample on the analyzer* on page B-103.

The **Sample Tracking** window also allows the operator to search for samples and subsequently unload them.

See *To unload specific racks* on page B-105.

Only STAT and routine samples

Only STAT and routine samples can be searched for in the **Sample Tracking** window.

► To track a sample on the analyzer

1 Choose **Sample Tracking** on the **System Overview** screen.

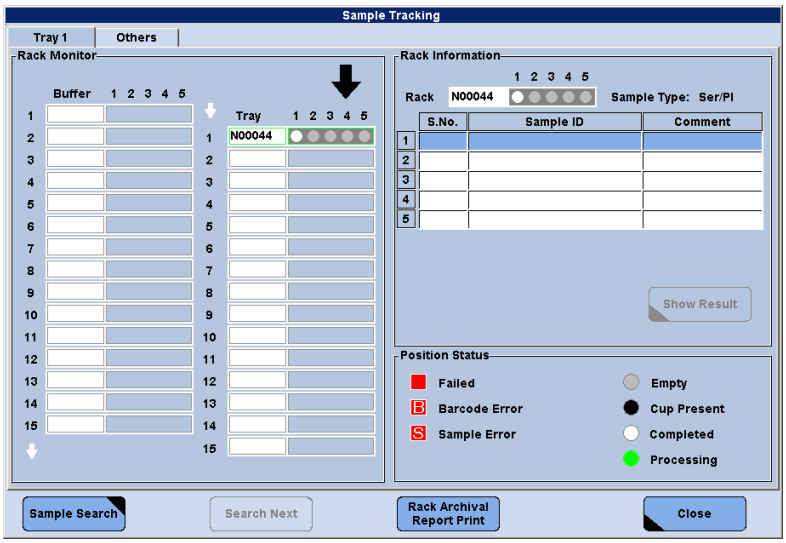

Figure B-52 Sample Tracking window

2 Choose **Sample Search** to display the **Sample Search** window.

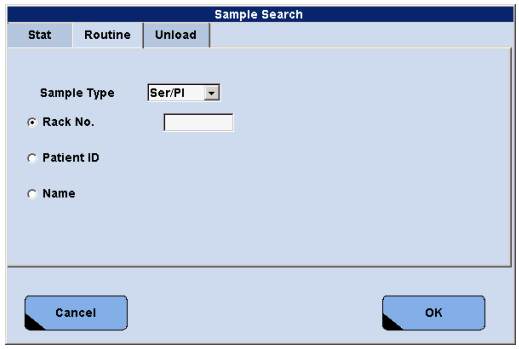

Figure B-53 Sample Search window - barcode mode

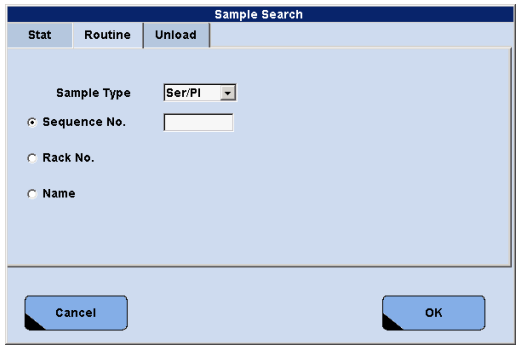

Figure B-54 Sample Search window - non-barcode mode

- If searching for a STAT sample choose the **Stat** tab.
- If searching for a routine sample choose **Routine**.

For using the **Unload** tab, see *To unload specific racks* on page B-105.

3 Choose the sample type.

4 Select the required search criterion.

5 Enter the data you are searching for in the corresponding text field.

6 Choose **OK**.

- If the sample is in the Unloader the sample is highlighted in the **Rack Information** area and the rack is highlighted in the **Rack Monitor** area.
- If the sample is not in the Unloader a short message is displayed under the **Others** tab indicating the location of the sample.

■

The **Others** tab shows samples that are being processed, but are not yet unloaded. Thus, it can only show information when the analyzer is in Operation mode.

For more information, see:
Sample tracking on page B-74
or refer to the *Online Help* of the particular window

► To unload specific racks

1 Choose **Sample Tracking** on the **System Overview** screen.

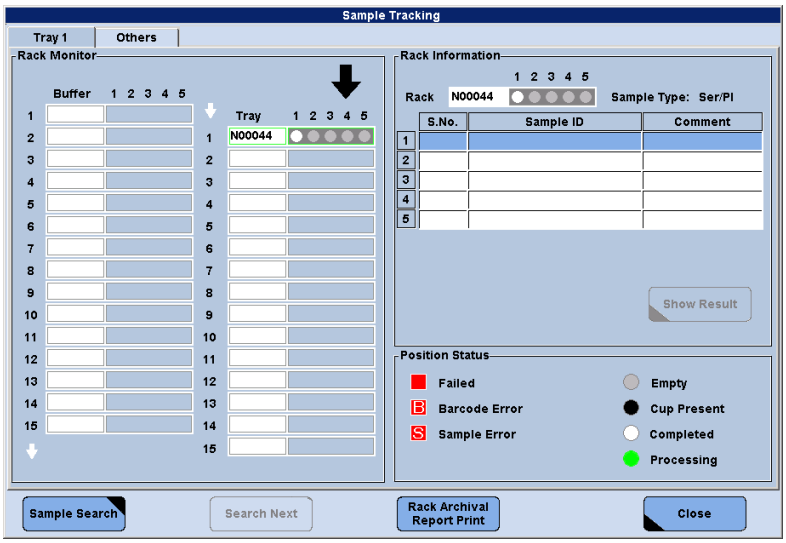

Figure B-55 Sample Tracking window

2 Choose **Sample Search** > **Unload**.

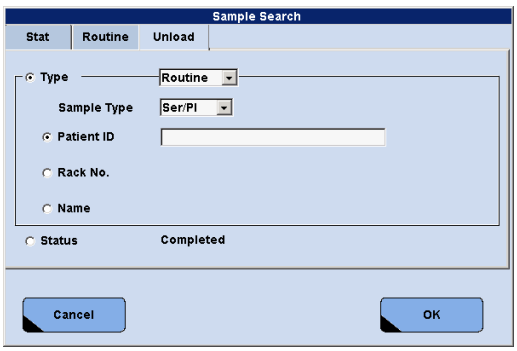

Figure B-56 Sample Search window - barcode mode

The **Unload** tab can be used to search for specific routine or STAT samples to be unloaded.

3 Select the required option, **Type** or **Status**.

- Select **Type** to search for samples according to the criteria in the **Type** area (for example, **Sample Type**, **Patient ID**, **Rack No.**).
- Select **Status** to search for samples with a specific sample status. Possible statuses are: **Completed**, **Failed**, **Barcode Error**, **Sample Error**

4 Select the required search criteria.

5 Enter the data you are searching for in the corresponding text field.

6 Choose **OK**.

A list of racks that meet the search criteria is displayed in the **Rack Monitor** area of the **Sample Tracking** > **Others** window.

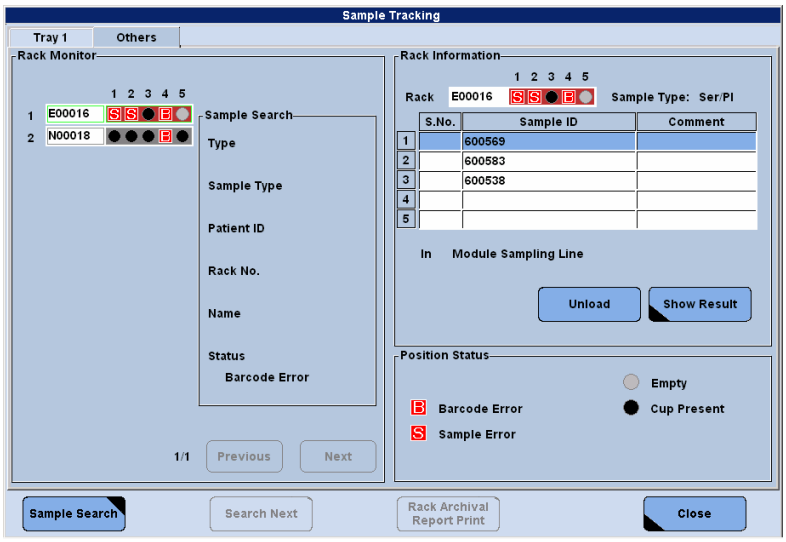

Figure B-57 Sample Tracking window - search results

7 Select the rack to be unloaded.

8 Choose **Unload** in the **Rack Information** area and confirm the unloading process.

The rack is transferred to the rack unloader.

- If the rack is in the pipetting position, on the module rack buffer (**e** 601) or already scheduled to one of the modules pipetting of all samples on the rack will be finished, before the rack is transferred to the rack unloader.
- Only routine and STAT racks can be unloaded, no calibrator and QC racks.
- A STAT rack can only be unloaded after it was processed once at any module.
- If a rack is unloaded after pipetting, the result for the samples will be processed.

■

Reagents

This chapter describes all types of reagents used on the **cobas** 6000 analyzer series. It provides information about the system's reagent management as well as detailed information on how the operator can monitor the status of loaded reagents (operator-related reagent management).

In this chapter

Chapter **10**

Reagent concept – c 501 ..... B-109
Reagents for ISE applications B-109
Overview of reagents for ISE B-109
Reagents B-110
Calibrators B-111
Controls B-111
Auxiliary reagents B-112
Reagents for photometric applications B-113
Overview of reagents for photometric unit B-113
Reagents B-113
Diluents B-115
Calibrators and controls B-115
Auxiliary reagents B-116
Reagent concept – e 601 ..... B-119
Reagents for immunoassay B-119
Overview of reagents for immunoassays B-119
Reagents B-120
Pretreatments and the PT link function B-123
Diluents B-125
Calibrators and controls B-127
Auxiliary reagents B-127
Operator-related reagent management B-129
Reagent Setting screen B-130
Manual reagent registration B-131
Loading and unloading of reagent cassettes (c 501) B-132
Reagent reloading (e 601) B-133

Reagent Status screen B-135
Replacing auxiliary reagents (c 501) B-136
Replacing auxiliary reagents (e 601) B-137
Replacing empty auxiliary reagents B-137
Replacing auxiliary reagents when not empty (green light is not flashing) B-140
Replacing consumables and emptying solid waste (e 601) B-144
Reagent Overview button B-146
Reagent Overview c 501 module B-146
Reagent area B-147
Inventory area B-149
ISE area B-150
Detail window B-151
Reagent Overview e 601 module B-152
Reagent area B-153
Inventory area B-154
Detail window B-155
Inventory Update window B-156

Reagent concept – c 501

This section provides information about reagents used on the **c** 501 module and how they are used for ISE applications and photometric applications. It describes the corresponding reagent containers used and explains how the system registers new reagents and how it monitors reagent consumption.

Reagents for ISE applications

This section describes all reagents that are necessary to run the **c** 501 module's ISE unit.

The following ISE applications are available:

- Na^+: Sodium serum/plasma and urine
- K^+: Potassium serum/plasma and urine
- Cl^-: Chloride serum/plasma and urine

Overview of reagents for ISE

The **c** 501 module's ISE unit uses the following reagents:

- *Reagents*
- *Calibrators*
- *Controls*
- *Auxiliary reagents*

Reagents

Each ISE measurement uses the following reagents:

Product name	Short name[(a)]	Description	Containers on the analyzer	Location
ISE Internal Standard	ISE IS	One-point calibrations performed before and after each sample measurement	2 bottles of 600 mL	ISE reagent compartment
ISE Diluent	ISE Dil.	1:31 dilution of sample	2 bottles of 300 mL	
ISE Reference Electrolyte	ISE Ref.	Reference electrode measurements	1 bottle of 300 mL	

Table B-10 Reagent for ISE measurement

(a) used in this documentation

ISE reagent container

The ISE IS, ISE Ref., and ISE Dil. bottles are positioned in the ISE reagent compartment. ISE reagent bottles do not use a barcode for registration.

A bottle insert can be used to prevent evaporation of the ISE IS.

ISE reagent volume

At analyzer startup, the remaining volume is checked for the current bottle of ISE IS, ISE Ref., and ISE Dil..

There is a bottle sensor at each of the reagent positions of the ISE reagent compartment. By means of a light beam, the sensor detects the presence of a reagent bottle. In addition to this, the ISE pipetter probe is equipped with a level detector (capacitance method), which monitors the liquid level in the reagent bottles.

ISE reagent replacement

A green indicator lamp (next to the reagent position) lights up if no reagent bottle is present or if the liquid level falls below the limit where the bottle needs to be replaced. For ISE IS and ISE Dil., the analyzer performs an automatic bottle changeover when a reagent shortage is detected.

Thus, replacement of ISE IS and ISE Dil. reagent bottles can be performed regardless of instrument status. ISE Ref. is to be replaced only when the analyzer is in standby or if the **c** 501 module is masked and in standby. After replacement of ISE Ref., a **Reagent Prime** is required.

When the number of available tests is “0” as a sum of the remaining volumes in two bottles, all ISE tests will be masked and thus no subsequent measurement is possible.

When you replace an ISE reagent bottle, always use new bottles.

For instructions on how to replace ISE reagents, see *c 501 – ISE unit* on page B-49.

Calibrators

The **c** 501 module´s ISE unit uses multi-analyte calibrators. The same multi-analyte calibrator is used for all ISE applications.

Barcode Calibrators can be used either with or without barcodes. If necessary, change the corresponding settings (**Barcode Setting** area on **Utility** > **System**).

Hints on using barcoded and non-barcoded calibrators

Do not use barcoded and non-barcoded calibrator vials on the same rack.

If working with non-barcoded calibrators, correct position of the calibrators must be checked, otherwise incorrect measurement results may occur.

If working with barcoded calibrators, you still have to assign the calibrators on any other calibrator rack using the codes 502, 503, and 763. The system will not start without this.

The order on the calibrator rack must be S1 (ISE Low), S2 (ISE High), S3 (ISE High).

Calibration interval The calibration interval for all ISE applications must not exceed a 24 hour time period.

For more information about ISE calibration, see:
Calibration concept - ISE applications on page B-163
ISE calibration on page B-197

Controls

The **c** 501 module´s ISE unit uses multi-analyte controls. The same multi-analyte control is used for all ISE applications.

Barcode Quality controls can be used either with or without barcodes. If necessary, change the corresponding settings (**Barcode Setting** area on **Utility** > **System**).

Hints on using barcoded and non-barcoded controls

Do not use barcoded and non-barcoded control vials on the same rack.

If working with non-barcoded controls, correct position of the controls must be checked, otherwise incorrect measurement result may occur.

Auxiliary reagents

The **c** 501 module´s ISE unit uses the following auxiliary reagents. The auxiliary reagents are used daily by the green wash rack maintenance procedure.

Product name	Short name[(a)]	Description	Containers on the analyzer	Location
Sample Cleaner 1	SmpCln 1	Washing the sample probe	Sample tube or cup on green wash rack[(b)]	Rack Pos. 1
ISE Cleaning Solution	SysClean	Washing the ISE flow path		Rack Pos. 2
Activator	Activator	Conditioning the ISE electrodes		Rack Pos. 3

Table B-11 Auxiliary reagents for ISE

(a) used in this documentation and in the software

(b) Hitachi micro cups, non-standard and false bottom tubes must not be used for the ISE green wash rack solutions.

For information on processing the green wash rack, see *Processing green wash rack* on page C-73.

Reagents for photometric applications

This section describes all reagents necessary to run the **c** 501 module's photometric unit.

Overview of reagents for photometric unit

The **c** 501 module´s photometric unit uses the following reagents:

- *Reagents*
- *Diluents*
- *Calibrators and controls*
- *Auxiliary reagents*

Reagents

Each photometric measurement uses reagents.

Reagent container: ***cobas c** pack*

Reagents for **c** 501 module´s photometric units are provided in the **cobas c** packs with two or three containers.

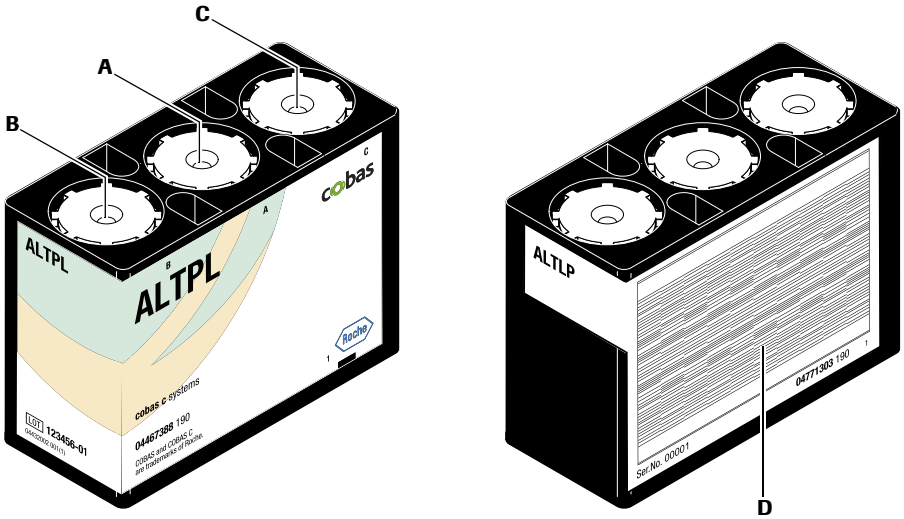

A	Bottle position A	**C**	Bottle position C
B	Bottle position B	**D**	Barcode

Figure B-58 **cobas c** pack with position designations

*Types of **cobas c** packs*

Two types of **cobas c** packs are available for this module:

- **cobas c** pack: Ready-to-use reagent pack
- **cobas c** pack MULTI: Empty reagent pack for development channel applications

*Configuration of **cobas c** packs*

The **cobas c** packs contain up to three reagent bottles. Pipetting at different times (R1, R2, or R3) is not restricted to any position.

***cobas c** pack MULTI*

For third party reagents, there is the **cobas c** pack MULTI, that is an empty configuration 2 cassette kit (empty but assembled and barcoded cassettes). These kits are used for development channels.

***cobas c** pack registration*

New **cobas c** packs are registered at the cassette preparation station after they have been loaded at the cassette loading port.

The following actions are done at **cobas c** pack registration:

- By reading the cassette barcode, the system checks the availability of the corresponding test application.
- The piercer pierces the reagent bottle caps.

For more information on the cassette preparation station and the cassette loading port, see *Cassette management system* on page A-79.

*Priority of **cobas c** packs*

If there are multiple **cobas c** packs for one application on a **c** 501 module, a **cobas c** pack becomes the active **cobas c** pack in the following order:

1. **cobas c** pack first registered on the system
2. **cobas c** pack with the same lot number as the last active **cobas c** pack
3. **cobas c** pack whose lot expires first

If there are multiple **cobas c** packs with the same lot number, the **cobas c** pack with the oldest registration date becomes the active **cobas c** pack.

A **cobas c** pack with an older registration date that is reloaded on the system becomes the active **cobas c** pack after the system went to standby.

Active **cobas c** packs are also called current **cobas c** packs.

***cobas c** pack volume*

After a **cobas c** pack has been registered, the system counts every pipetting out of this cassette. Thus, the cassette's initial number of available tests is counted down.

When the number of available tests (total number of tests available for an application on one module) is lower than a defined limit, an alarm is issued (yellow or purple alarm, according to configuration under **Utility** > **System** > **Reagent Level Check**).

When the number of available tests becomes zero, a red alarm is issued and the test is masked—unless another **cobas c** pack is available by loading during operation, as a standby **cobas c** pack, or on a second module.

For more information on monitoring the reagent status, see *Reagent Status screen* on page B-135.

*Unloading and reloading **cobas c** packs*

The system counts down each cassette's initial number of available tests with every pipetting out of that cassette. The number of available tests per **cobas c** pack is stored by the system for up to 3000 **cobas c** packs. If you unload a **cobas c** pack and reload it later, the system recognizes the **cobas c** pack and continues the test count at the point where it was unloaded. It is assumed that the **cobas c** pack´s reagent volumes remain unchanged while the **cobas c** pack is not on the analyzer.

For further instructions, see *To unload a reagent cassette* on page B-132.

Carryover prevention

Even though all pipetter probes and reaction cells are washed and rinsed thoroughly after each use, it could be possible that traces of sample or reagent remain on contacted parts (probes or reaction cells) and are carried over at the next pipetting.

Using the special wash function, the system prevents traces of sample liquid or reagent from being carried over and influence the result of a later test.

For more information on programming special washes for **c** 501, see:
Reagent probe wash on page B-302
Cell wash on page B-304
Sample probe wash on page B-306

Diluents

The **c** 501 module´s photometric unit can use for the following diluents, for example:

Product name	Short name[(a)]	Description	Containers on the analyzer	Code
NaCl 9%	*NaCl*	Diluent for photometric tests	**cobas c** pack	951
Hemolyzing Reagent Gen. 2	*A1CD2*	Diluent for HbA1c whole blood test	**cobas c** pack	952
Water	*H2O*	Deionized water	Water tank	

Table B-12 Diluents for photometric tests

(a) used in this documentation and in the software

The diluent used can be seen on the **Utility** > **Application** > **Analyze** screen.

See *Description of application parameters – Analyze tab* on page B-265.

The parameters for Roche Diagnostics application diluents must be downloaded from **cobas** link. The diluent solution in the **cobas c** pack can be a concentrated solution (for example, a **cobas c** pack with NaCl 9%. The 9% solution is diluted with water to a concentration of 0.9% by the analyzer).

To monitor the remaining amount of diluent, set a reagent warning level.

Calibrators and controls

The **c** 501 module´s photometric unit needs calibrators and controls.

Calibrators

For photometric applications, multi-analyte calibrators (for example, CFAS) and special calibrators (for example, CFAS Hba1c) are available. The same multi-analyte calibrator is used for a large number of applications whereas a special calibrator covers only a few or only one application.

Multi-analyte calibrators for **c** 501 applications are CFAS (without diluent), CFAS Proteins, or CFAS Proteins Urine/CSF.

For information about calibrators for specific applications, refer to the corresponding instructions for use.

Controls

For photometric applications, multi-analyte controls (for example, PreciControl ClinChem Multi 1 and Multi 2) and special controls (for example, PreciControl HbA1c norm) are available. The same multi-analyte control is used for a large number of applications, whereas a special control covers only a few or only one application.

Multi-analyte quality controls are PNU and PPU.

For information about quality controls for specific applications, refer to the corresponding instructions for use.

Auxiliary reagents

The **c** 501 module´s photometric unit uses the following auxiliary reagents:

Product name	Short name[(a)]	Description	Containers on the analyzer	Location	Figure B-59
Cell Wash Solution I / NaOH-D	CellCln 1	NaOH-D, used for rinsing and cleaning reaction cells	1 large bottle	Behind the left front door	**H**
Cell wash Solution II / Acid Wash	CellCln 2	Acid wash, test specific, used for rinsing and cleaning reaction cells	1 large bottle		**I**
Sample Cleaner 1	SmpCln 1	Sample probe wash solution 1, NaOH	1 bottle of 70 mL	Reaction disk area	**B**
Sample Cleaner 2	SmpCln 2	Sample probe wash solution 2, acid wash	1 bottle of 70 mL		**C**
EcoTergent	BathDet	Surfactant for incubator bath to prevent algae proliferation and foaming	1 bottle of 70 mL	Reaction disk area	**G**
Detergent 1	NaOH-D	For reagent probe wash and cell wash (Maintenance item (7) Wash Reaction Parts)	1 **cobas c** pack ACN 947	Reagent rotor	**D**
Detergent 2	SMS	For reagent probe wash and cell wash	1 **cobas c** pack ACN 948		**E**
Detergent 3	SCCS	Solution, used for reaction cell carryover prevention in long HbA1c batches	1 **cobas c** pack ACN 949		**F**
Sample Cleaner 1	SmpCln 1	Washing the sample probe	Sample tube or cup on green wash rack	Rack Pos. 1	**A**

Table B-13 Auxiliary reagents for photometric tests

(a) used in this documentation and in the software

Location The figure below gives an overview of the auxiliary reagents used by the **c** 501 module´s photometric unit and their location.

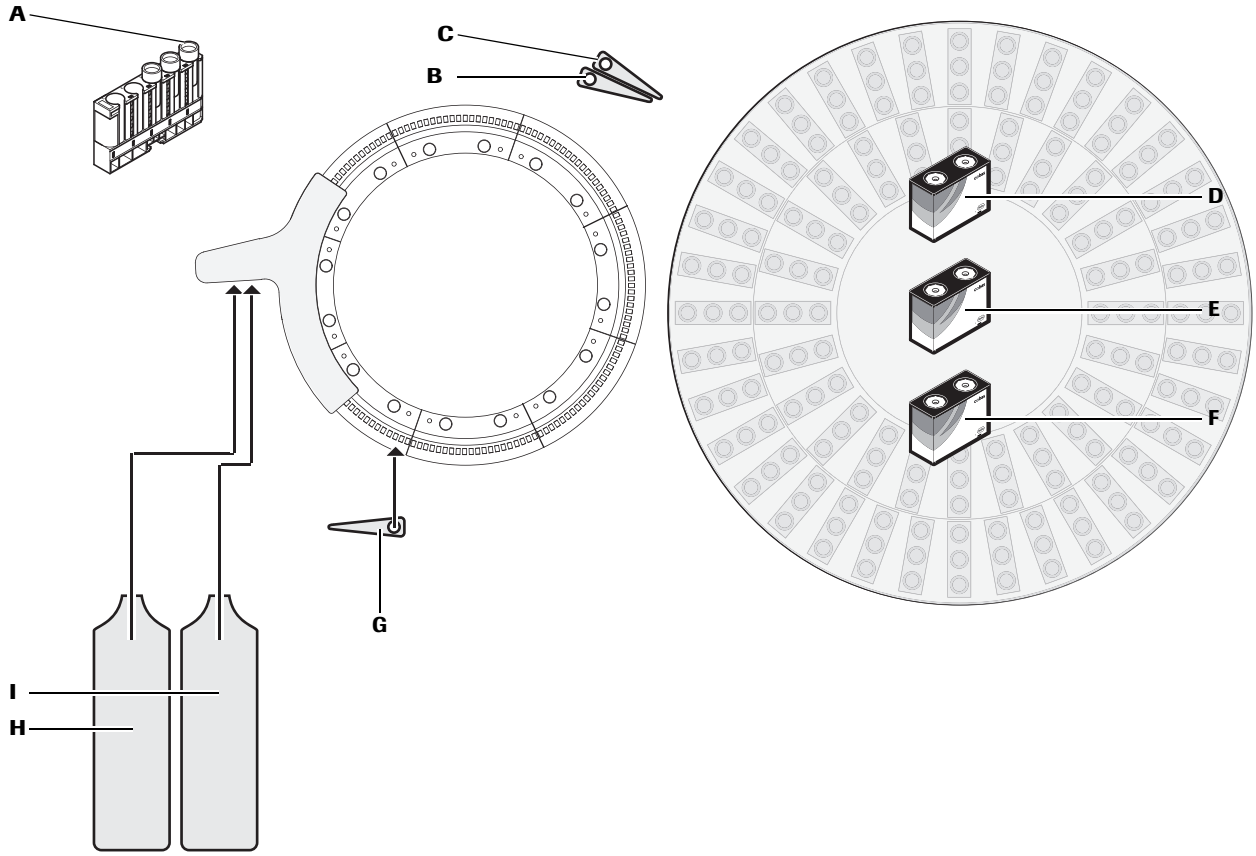

A	Sample Cleaner 1 (green wash rack, 1)	**D**	NaOH-D (**cobas c** pack)	**G**	EcoTergent
B	Sample Cleaner 1	**E**	SMS (**cobas c** pack)	**H**	Cell Wash Solution I / NaOH-D
C	Sample Cleaner 2	**F**	SCCS (**cobas c** pack)	**I**	Cell wash Solution II / Acid Wash

Figure B-59 Location of auxiliary reagents for photometric tests

To locate these auxiliary reagents on the analyzer, see:
Behind the front doors on page A-90
Figure B-155 on page B-307

Auxiliary reagent volume

The remaining volumes are displayed on the **Reagent** > **Status** screen. Whenever a reagent bottle is replaced, the operator has to reset the initial volume. Reagent registration is not performed automatically when a new bottle is loaded.

The table below describes the reagent volume control and reset action for the auxiliary reagents of the **c** 501 module´s photometric unit.

Auxiliary	Volume control	Reset
Cell Wash Solution I / NaOH-D Cell wash Solution II / Acid Wash	countdown[(a)]	User action[(b)] (in standby only)
EcoTergent	LLD by ISE probe	User action[(b)]
Sample Cleaner 1 Sample Cleaner 2	LLD by sample probe	User action[(b)]
NaOH-D SMS SCCS	countdown[(a)]	By the instrument during **cobas c** pack registration

Table B-14 Auxiliary reagents: Remaining volume control

(a) The remaining volumes of the auxiliary reagent are monitored by countdown, starting from a given initial volume.

(b) **Reagent** > **Status** > **Reagent Volume Reset**

For more information on monitoring the reagent status, see:
Reagent Status screen on page B-135
To reset initial volumes of auxiliary reagents on page B-137
cobas c pack registration on page B-114

Reagent concept – e 601

This section provides information about all reagents used on the **e** 601 module including auxiliary reagents, diluents, calibrators, and controls. It also describes the reagent containers used on this module.

Reagents for immunoassay

This section describes all reagents necessary to run immunoassays on the **e** 601.

Overview of reagents for immunoassays

The **e** 601 module requires the following reagents:

- Assay-specific reagents
- *Pretreatments*
- *Diluents*
- *Calibrators and controls*
- *Auxiliary reagents*

*Color code of **cobas e** packs*

The following table shows the color code of the **cobas e** packs that are used for reagents, pretreatments, and diluents.

	Reagent		Pretreatment		Diluent	
	Bottle	**Cap**	**Bottle**	**Cap**	**Bottle**	**Cap**
1st container	transparent	transparent	black	black	black	white
2nd container	black	gray	transparent	white	(black)	(white)
3rd container	black	black				
	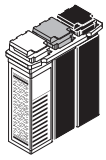		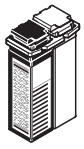			

Table B-15 Color code of the **cobas e** packs

Reagents

Each measurement uses reagents.

Reagent container: ***cobas e*** *pack*

Reagents for **e** 601 module are provided in **cobas e** packs with three containers.

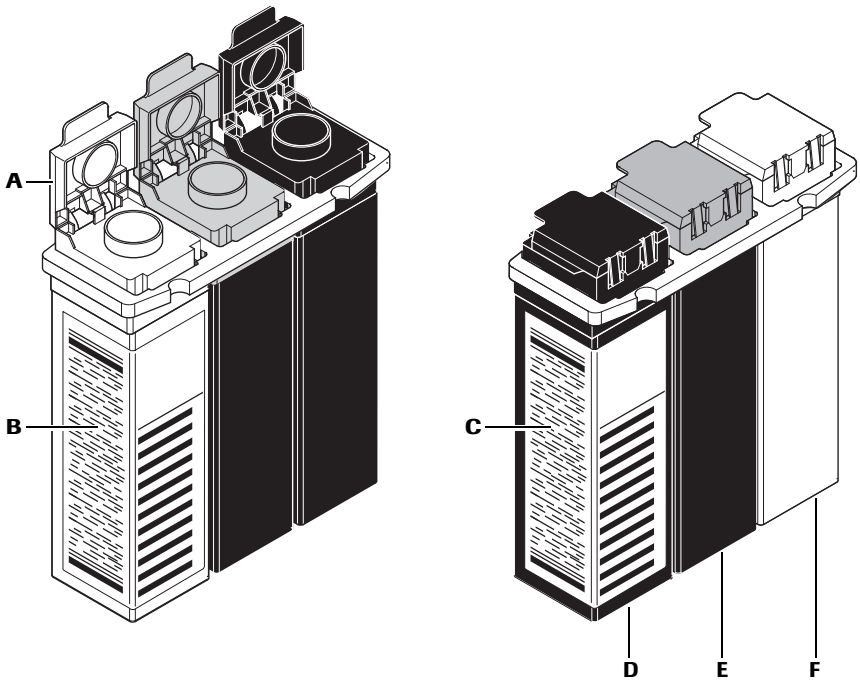

A Cap of the reagent container
B Barcode label used for Elecsys systems
C Barcode label used for **cobas** 6000 analyzer series
D Reagent 2 (R2)
E Reagent 1 (R1)
F Microbeads

Figure B-60 **cobas e** pack for reagents

Types of ***cobas e*** *packs*

Depending on the assay two types of reagent kits are available:

- **cobas e** pack
- **cobas e** pack plus **cobas e** pack for pretreatment

For more information about **cobas e** pack for pretreatments, see *Pretreatments and the PT link function* on page B-123.

*Caps of **cobas e** pack*

The reagent containers of the **cobas e** packs are equipped with caps (**A**). The caps prevent evaporation of the reagents.

The **e** 601 module is equipped with an open/close mechanism for the caps of the **cobas e** packs. The mechanism is able to open and close the caps automatically if the caps are in the so-called *soft-close position*: The caps are almost closed, but not tightly closed.

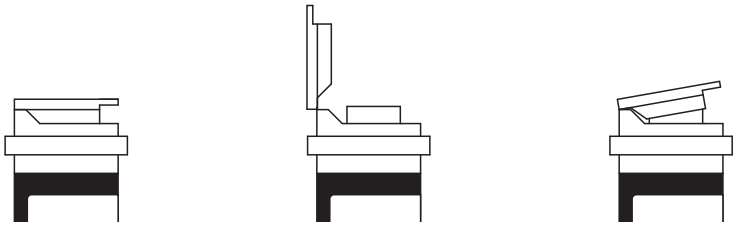

A Cap: Closed **B** Cap: Open **C** Cap: Soft-close position

Figure B-61 Caps of **cobas e** pack: Soft-close position

*Configuration of **cobas e** packs*

A **cobas e** pack consists of three separately capped containers.

1st container	Microbeads
2nd container	Reagent 1 (R1)
3rd container	Reagent 2 (R2)

An individual **cobas e** pack is available for each **e** 601 application.

For the color code of the **cobas e** packs, see *Color code of cobas e packs* on page B-119.

***cobas e** pack registration*

New **cobas e** packs are registered by scanning the barcode.

Barcode

The **cobas e** packs are equipped with a barcode label. The analyzer scans this barcode label each time the operator closes the reagent cover. The system scans all **cobas e** pack barcodes at once.

Unreadable barcode

cobas e packs must be inserted into the reagent disk with their barcode label facing the center of the reagent disk.

If a **cobas e** pack's barcode is unreadable, it can be registered manually by entering the 15-digit number on barcode label. This number is only accepted if one barcode of the same test and lot number was already successfully scanned and registered on the system.

For manual registration of **cobas e** packs, see *Manual reagent registration* on page B-131.

*Priority of **cobas e** packs*

If there are multiple **cobas e** packs for one application on an **e** 601 module, a **cobas e** pack becomes the active **cobas e** pack in the following order:

1. **cobas e** pack first registered on the system
2. **cobas e** pack with the same lot number as the last active **cobas e** pack

   If there are multiple **cobas e** packs with the same lot number as the last active **cobas e** pack:

   a) The **cobas e** pack with the oldest registration date
   b) The **cobas e** pack with the least remaining volume
   c) The **cobas e** pack on the lowest position number on the reagent disk
3. **cobas e** pack with the lot number that expires first

Active **cobas e** packs are also called current **cobas e** packs.

***cobas e** pack volume*

The system counts down the initial number of available tests.

When the number of available tests (total number of tests available for an application on one module) is lower than a defined limit, an alarm is issued (yellow or purple alarm, according to configuration under **Utility** > **System** > **Reagent Level Check**).

When the number of available tests becomes zero, a red alarm is issued and the test is masked—unless another **cobas e** pack is available as a standby **cobas e** pack or on a second module.

For more information on monitoring the reagent status, see *Reagent Status screen* on page B-135.

Carryover prevention

Heterogeneous immunoassays are very sensitive tests. Some combinations of these assays are especially sensitive against carryover within the **e** 601 module. To prevent such carryover, special wash programs are pre-programmed on **Utility** > **Special Wash** > **Immune**.

For more information on programming special washes for **e** 601, see *Reagent probe wash* on page B-308.

Pretreatments and the PT link function

Some analytes are not detectable in the native sample. Therefore, some immunoassays use a pretreatment procedure to prepare the sample for measurement.

For information about pretreatments, refer to the instructions for use of the respective application.

*Pretreatment container: **cobas e** pack*

Pretreatments are provided in **cobas e** packs with one or two containers.

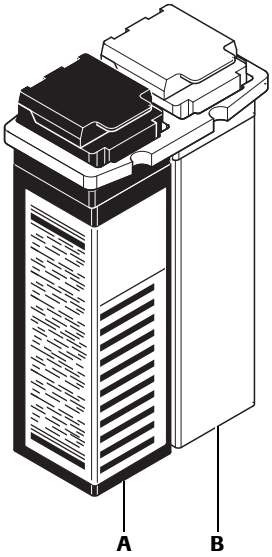

A Pretreatment 2
B Pretreatment 1

Figure B-62 Pretreatments **cobas e** pack

For more information about the **cobas e** pack for pretreatment, see *Reagents* on page B-120.

*Configuration of pretreatment **cobas e** packs*

A pretreatment **cobas e** pack consists of one or two capped reagent containers.

1st container	Pretreatment bottle 1 (PT1)
2nd container	Pretreatment bottle 2 (PT2)

*Linked with reagent **cobas e** pack*

After registration, a pretreatment **cobas e** pack always forms a pair with a reagent **cobas e** pack of the same test and the same lot. This function is called PT link. The linkage is required from the stability point of view.

- Once a reagent **cobas e** pack and a pretreatment **cobas e** pack are linked together, none of them can be linked to another **cobas e** pack.
- The lower number of remaining tests in one of the linked **cobas e** packs determines the number of available tests. A liquid level detection is performed during aspiration of pretreatment.
- If one **cobas e** pack in the pair becomes empty, the remaining number of tests for the linked **cobas e** pack is set to 0. Both **cobas e** packs cannot be used anymore.

Link statuses

Both **cobas e** packs can have one of the following link statuses:

Link Status		Explanation
Free	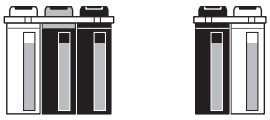	The **cobas e** pack is not yet linked to any other **cobas e** pack and has not been used before. Free **cobas e** packs are not available for measurement.
Linked	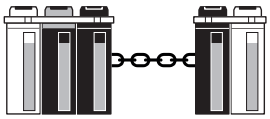	The **cobas e** packs are linked together. If both **cobas e** packs are on board, the reagent is available for use. If one **cobas e** pack becomes empty, both reagents are not available for measurement.

Table B-16 Explanation of the link statuses

If a **cobas e** pack is linked, it can never receive the status **Free** again.

cobas e packs already used before software update

After updating to the current software version with the PT link function, some **cobas e** packs may still have the link status **Free** even though they have been used. The PT link function will be used for the next fresh **cobas e** packs.

Linking rules and timing

The instrument registers **cobas e** packs automatically when the reagent disk cover is closed. If the instrument recognizes a reagent **cobas e** pack with the link status **Free**, the instrument tries to find an available pretreatment **cobas e** pack. This pretreatment **cobas e** pack must fulfill the following conditions:

- The lot number and the **Code** (**Reagent** > **Setting** screen list) are identical with those of the reagent **cobas e** pack.
- The pretreatment **cobas e** pack has the status **Free**.

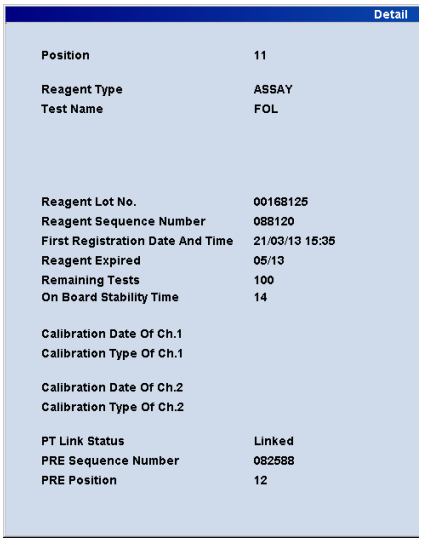

Detail window for the reagent **cobas e** pack

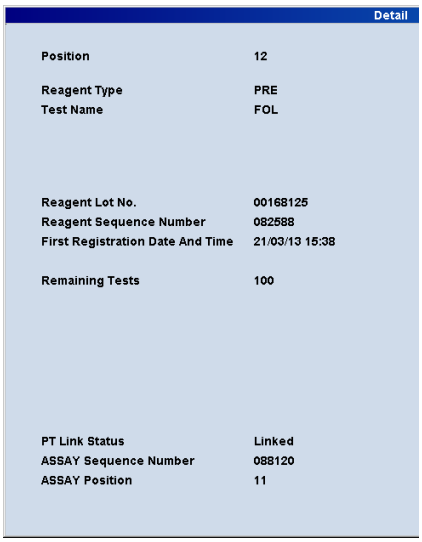

Detail window for the pretreatment **cobas e** pack

Figure B-63 **Detail** window

Diluents

Dilution of samples is necessary when the analyte concentrations exceed the measuring range of the respective immunological test method. In addition, general dilution of samples is specified for some immunological tests.

Examples for diluents are:

- Diluent Universal
- Diluent MultiAssay

For information on required diluents and recommended dilution factors, refer to the instructions for use of the respective application.

*Diluent container: **cobas e** pack*

Diluents for **e** 601 modules are available in the **cobas e** packs.

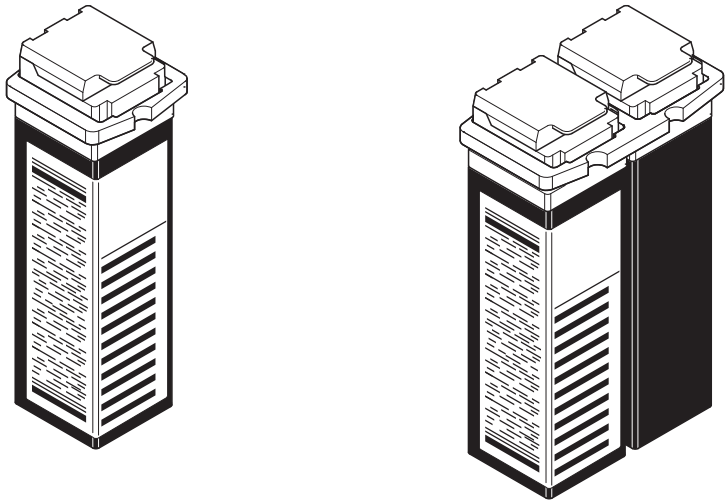

cobas e pack for diluent with one container | **cobas e** pack for diluent with two containers

Figure B-64 **cobas e** pack for diluent

*Caps of **cobas e** pack for diluent*

The diluent containers of the **cobas e** packs are equipped with caps (**A**). The caps prevent evaporation of the diluent.

The **e** 601 modules are capable of opening and closing these caps automatically if the caps are in the so-called *soft-close* position: The caps are almost closed, but not tightly closed. This ensures the caps can be opened by the mechanism in all cases.

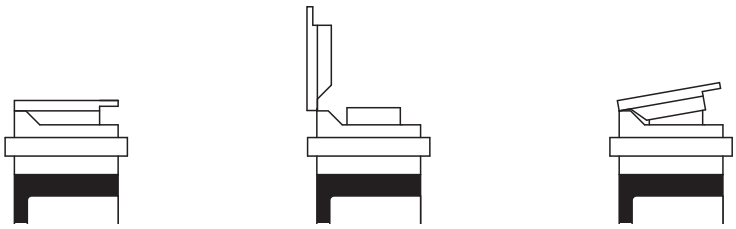

A Cap: Closed **B** Cap: Open **C** Cap: Soft-close position

Figure B-65 Caps of **cobas e** pack: Soft-close position

*Configuration of **cobas e** packs for diluent*

The **cobas e** packs for diluent consist of one or two separately capped diluent containers.

1st container	Diluent
(2nd container)	(Diluent)

*One- or two-container **cobas e** pack for diluent*

Usually the **cobas e** packs for diluent consist of one container. In addition, some diluents are also supplied in **cobas e** packs for diluent with two containers.

If a diluent is provided as **cobas e** packs for diluent with one or two containers, the user must decide which **cobas e** pack for diluent to load on the system. This depends on the following aspects:

- The consumption of this diluent of the corresponding **e** 601 module
- The on-board stability of the **cobas e** pack for this diluent

The **cobas e** pack for diluent should be empty before its on-board stability expires.

*Priority of **cobas e** packs for diluent*

If there are multiple **cobas e** packs for one diluent on an **e** 601 module, a **cobas e** pack for diluent becomes the active **cobas e** pack for diluent in the following order:

1. **cobas e** pack for diluent first registered on the system
2. **cobas e** pack for diluent with the same lot number as the last active **cobas e** pack for diluent

   If there are multiple **cobas e** packs for diluent with the same lot number as the last active **cobas e** pack for diluent:

   a) The **cobas e** pack for diluent with the oldest registration date
   b) The **cobas e** pack for diluent with the least remaining volume
   c) The **cobas e** pack for diluent on the lowest position number on the reagent disk
3. **cobas e** pack for diluent with the lot number that expires first

Active **cobas e** packs for diluent are also called current **cobas e** packs for diluent.

Application specific

If a test uses a diluent, the required diluent is specified in the application. An automatic dilution is only possible with the specified diluent.

One diluent can be specified for multiple applications.

For the specified diluent, refer to the instructions for use of the **cobas e** pack.

Reagent Load/Unload list

If you load a **cobas e** pack for a new application that requires a diluent, this diluent is not listed on the **Reagent Load/Unload List**.

Define the yellow and the purple alarm levels for all diluents to ensure that there are always sufficient diluents on the **e** 601 module.

For defining the yellow and purple alarm level, refer to the *Online Help* of the **Reagent Level Check** window.

Missing diluent

If a test requires dilution and the appropriate diluent is not available, the system behaves as follows:

- **Workplace** > **Test Selection** screen: Test is masked
- **System Overview** screen: Module is displayed in red

Test configuration

On **cobas** 6000 analyzer series with two **e** 601 modules, install the tests that required the same diluent on the same **e** 601 module. This saves space on the reagent disk of the **e** 601 module.

Calibrators and controls

The **e** 601 module´s immunological unit needs calibrators and controls.

Calibrators Immunological applications use test-specific calibrator sets called CalSets. A calset comprises two levels: cal1 and cal2.

For information about calibrators for specific applications, refer to the corresponding instructions for use.

Controls For immunological applications multi-analyte controls and specific controls are available. The same multi-analyte control is used for a large number of applications, whereas a specific control covers only one application.

For information about quality controls for specific applications, refer to the corresponding instructions for use.

Auxiliary reagents

The **e** 601 uses the following auxiliary reagents:

Product name	Short name[(a)]	Description	Containers on the analyzer	Location
ProCell M	ProCell	Conditioning of the electrodes Transport of the assay reaction mixture Bound-free separation in measuring cell Signal generation	2 bottles of 2 L	Behind the front doors
CleanCell M	CleanCell	Cleaning of tubing system and measuring cell after every measurement Conditioning of the electrodes	2 bottles of 2 L	
PreClean M	PreClean	To remove potentially interfering substances in the prewash procedure Required only for certain assays. Its use is indicated under *materials required (but not provided)* in the respective assay reagent instructions for use	2 bottles of 600 mL	
ProbeWash M	ProbeWash	Cleaning the reagent probe during special wash steps and finalization	2 bottles of 70 mL	Near the reagent probe
SysClean	SysClean	Sodium hypochlorite solution used for intensive cleaning of the measuring cells (maintenance procedure *liquid flow path cleaning*)		Not on the analyzer

Table B-17 Auxiliary reagents for immunological tests

(a) used in this documentation

Auxiliary reagent volume

The remaining volumes are displayed on the **Reagent** > **Status** screen.

The table below describes the reagent volume control and reset action for the auxiliary reagents of the **e** 601 module.

Auxiliary	Volume control	Reset
ProCell	countdown[(a)]	User action[(b)]
CleanCell	countdown[(a)]	User action[(b)]
PreClean	countdown[(a)]	User action[(b)]
ProbeWash	LLD by reagent probe	LLD by reagent probe[(c)]

Table B-18 Auxiliary reagents: Remaining volume control

(a) The remaining volumes of the auxiliary reagent are monitored by countdown, starting from a given initial volume.

(b) Pressing the flashing button.

(c) After executing the inventory update.

For more information on monitoring the reagent status, see:
Reagent Status screen on page B-135
To replace empty ProbeWash on page B-140

Operator-related reagent management

The following sections describe tasks and data that can be accessed by the screens under the **Reagent** menu. The **Reagent** menu contains two screens: The **Reagent** > **Setting** screen and the **Reagent** > **Status** screen. In addition, the **Reagent Overview** button on the **System Overview** screen as well as windows accessed via this button are explained.

However, this chapter does not cover all possible commands. For a complete description of all fields of the software's user interface, refer to the *Online Help*.

Reagent > Setting screen

The **Reagent** > **Setting** screen provides detailed information about each test reagent and position for each installed module. The compiled data include reagent codes, lot numbers, expiration dates (shelf life) as well as on board stability of reagents (in days). Tasks that can be performed from this screen are:

- Priming reagents (ISE and **e** 601)
- Unloading **cobas c** packs (**c** 501)
- Manually registering **cobas e** packs (**e** 601)
- Open channel (**c** 501)
- Loading a **cobas c** pack MULTI for a Development Channel application (**Open Channel** – **c** 501)

Reagent > Status screen

The **Reagent** > **Status** screen provides all important data about test reagents to monitor the reagent status on the analyzer. The data are sorted according to the names of the applications and displayed either for all modules or for one specified module. Moreover, there is an additional list, which provides information about auxiliary reagents. Tasks that can be performed from this screen are:

- Resetting the remaining volume control for auxiliary reagents (**c** 501)
- Entering ProCell lot numbers (**e** 601)

For a complete description of all fields and commands under the **Reagent** menu, refer to the *Online Help*.

For more information, see:
Reagent Setting screen on page B-130
Reagent Status screen on page B-135

System Overview screen > Reagent Overview button

By changing its color, the **Reagent Overview** button indicates potentially insufficient amounts of reagent on the module currently selected in the **Module Overview** area. Choose this button to view details about the status of loaded reagents.

See *Reagent Overview button* on page B-146.

Reagent Setting screen

To display this screen, choose **Reagent** > **Setting**.

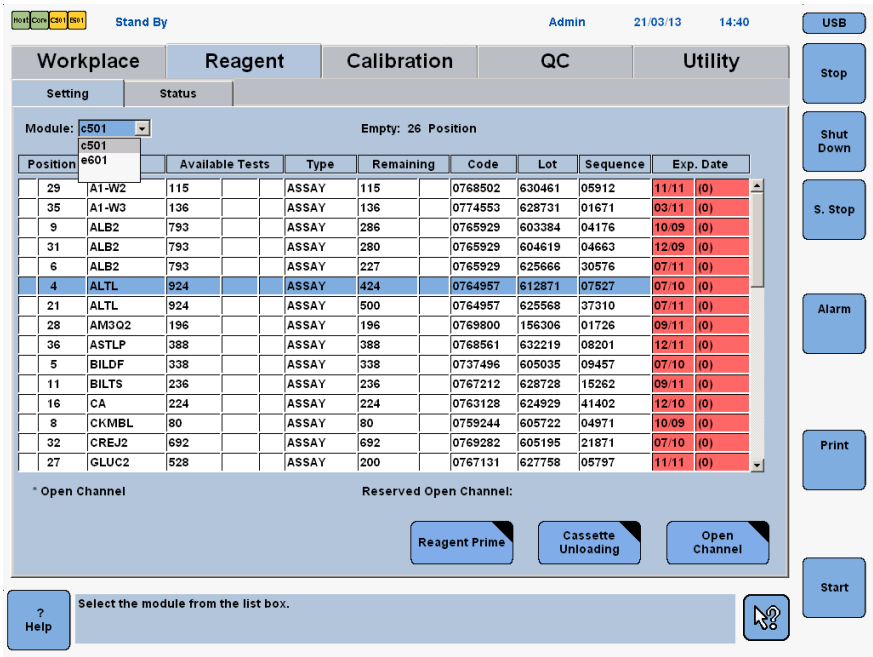

Figure B-66 Reagent Setting screen

This screen comprises a **Module** box (on the top left), a large test list, and several buttons. The buttons available as well as the view of the test list change according to the module selected from the **Module** box.

For more information about the different fields and buttons on this screen, refer to the *Online Help* of the particular field or button.

*Manual Registration (**e** 601)*

Use this button to manually register a **cobas e** pack; that is, to manually enter a **cobas e** pack barcode number.

For more information, see *Manual reagent registration* on page B-131.

Reagent Prime

Use this button to prime reagents either of the **e** 601 (ProCell, CleanCell, PreClean) or of the ISE unit (ISE IS, ISE Ref.).

For more information, see:
Reagent Preparing button on page B-48
To perform a Reagent Prime on page B-52
Reagents on page B-110
Auxiliary reagents on page B-127

*Cassette Unloading (**c** 501)*

Use this button to unload a reagent cassette either to the cassette loading port or to the cassette disposal.

For more information, see *Loading and unloading of reagent cassettes (c 501)* on page B-132.

Manual reagent registration

⚠ CAUTION

Incorrect results due to cobas e pack barcode read error

There is a risk of **cobas e** pack mismatch during manual **cobas e** pack registration. If a **cobas e** packs is not placed in the proper position, incorrect measurement results may occur.

- After manual registration, thoroughly check the reagent information.
- If a new barcode read error occurs after manual registration of a **cobas e** pack, check if the **cobas e** pack is the correct position.

A manual reagent registration for the **c** 501 is not available. The **c** 501 automatically registers all new **cobas c** packs, if the corresponding application is installed. The initial reagent volume is counted down with each pipetting.

The **e** 601 automatically registers all new **cobas e** packs. In case the automatic registration fails (if system is unable to read the barcode), you can manually register a **cobas e** pack from the **Manual Registration** (**e** 601) window.

► To manually register a cobas e pack

1. Select an **e** 601 from the **Module** box on the **Reagent** > **Setting** screen.
2. Select the position of the **cobas e** pack for which the automatic registration failed.

   The **cobas e** packs for which the automatic registration failed is indicated by ---- in the **Test** column. The **Manual Registration** button becomes active if you select this position.
3. Choose **Manual Registration** to open the **Manual Registration** (**e** 601) window.
4. Type the barcode of the **cobas e** pack to be registered (15 digit number).
5. Choose **OK**.

■

It is only possible to manually register a **cobas e** pack if at least one **cobas e** pack of the same lot was scanned in before.

Loading and unloading of reagent cassettes (c 501)

Loading reagent cassettes

Load **cobas c** packs at the loading port behind the arched flap at the front of the **c** 501 module. When loading, make sure the cassette's barcode label is facing to the right. Reagent registration is performed automatically when a new reagent cassette is loaded.

For more details, see *Replacing cobas c packs* on page B-53.

Unloading reagent cassettes

The **c** 501 module automatically unloads empty reagent cassettes to the cassette disposal. If you need to manually unload a reagent cassette, you have the choice either to send it to the cassette loading port (option **Unload**) or to send it to the cassette disposal (option **Dump**). In case you intend to reload the reagent cassette, choose **Unload**.

If you use the option **Dump** for unloading a cassette, the cassette cannot be reloaded.

► To unload a reagent cassette

1. Put the module in standby.
2. Select a **c** 501module from the **Module** box on **Reagent** > **Setting**.
3. Select the position of the reagent cassette that is to be unloaded.
4. Choose **Cassette Unloading** to open the **Cassette Unloading** window.
5. Choose either **Unload** (to send the cassette to the cassette loading port) or **Dump**.
6. Choose **Execute**.
7. When the cassette disposal becomes full, remove and dispose of the **cobas c** packs from the cassette disposal according to local regulations.

The cassette disposal has a capacity of 10 **cobas c** packs.

■

Reagent reloading (e 601)

Reagent reloading is a function that automatically starts a reagent reloading process on a particular module. It is separately selectable for each application on that module.

Reloading process

If selected, the reloading process starts when the number of remaining tests for the respective application becomes zero.

For more information, see *To assign a test to an e 601 module* on page B-293.

The reloading process comprises the following items:

1. The following caution-level alarm (yellow) is issued: **Reagent reloading**.

   The alarm code is within the range of 381-xxxx through 386-xxxx, where the subcode xxxx indicates the affected application: xxxx corresponds to the application code number (for example 1052 corresponds to CA15-3 with ACN 52).

2. The module automatically stops pipetting. The racks in the siding line are transported to their destination (other modules, rack rotor, or rack unloader). Other racks which have already passed the barcode reader are no longer transported into this particular module. All samples which are in process are measured.
3. After the results are available, the module turns to stand by. Reagents can be reloaded.

   Stand by and reload possibility is indicated both in the status line and on the **System Overview** screen by the module being displayed in pink.

4. After closing the reagent cover, reagent registration is automatically performed.

   After that liquid level detection and initial beat mixing is performed (Preparation).

5. Finally, the module returns to operation.

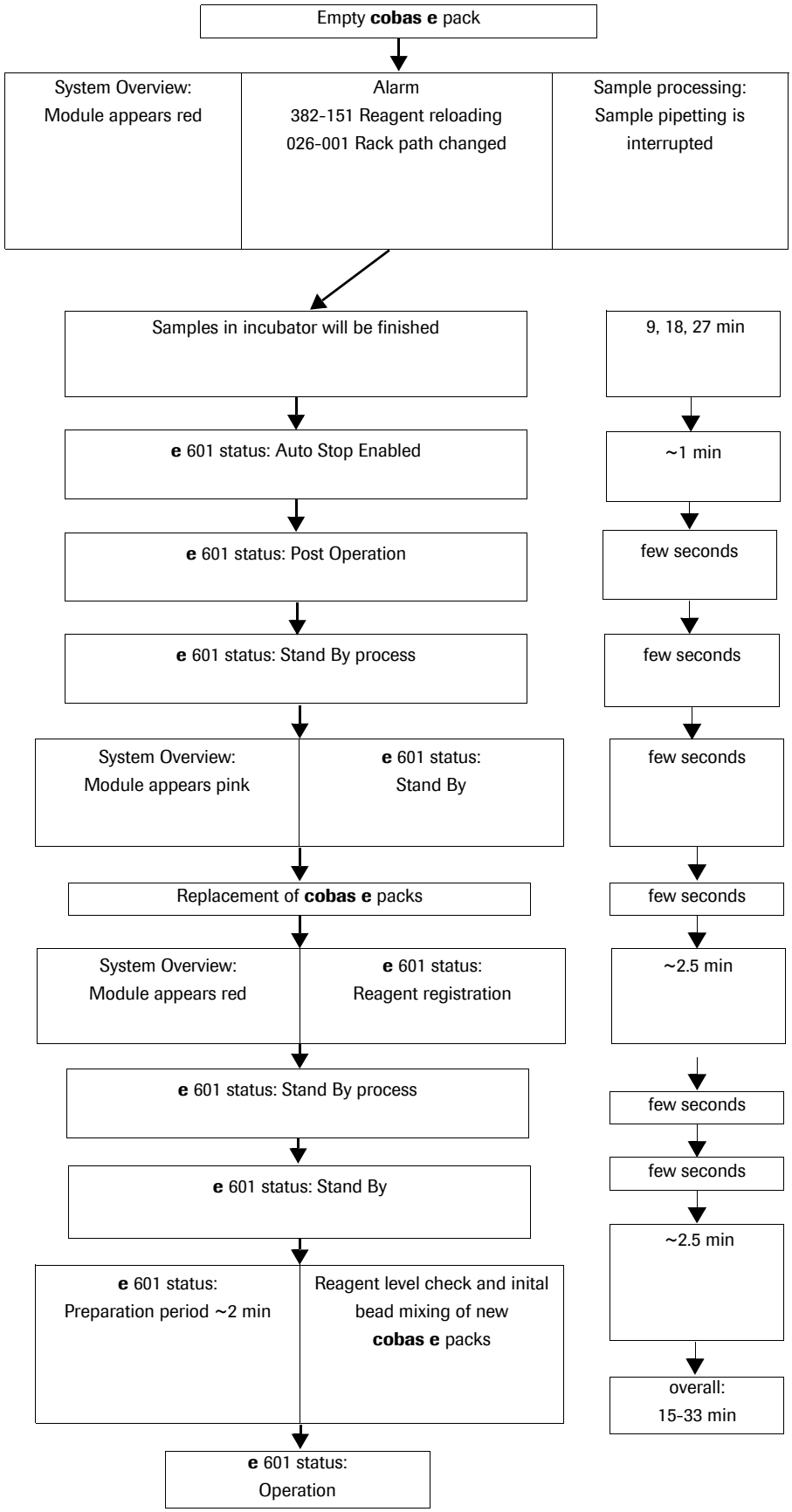

Figure B-67 Reagent reloading process (**e** 601)

Reagent Status screen

To display this screen, choose **Reagent** > **Status**.

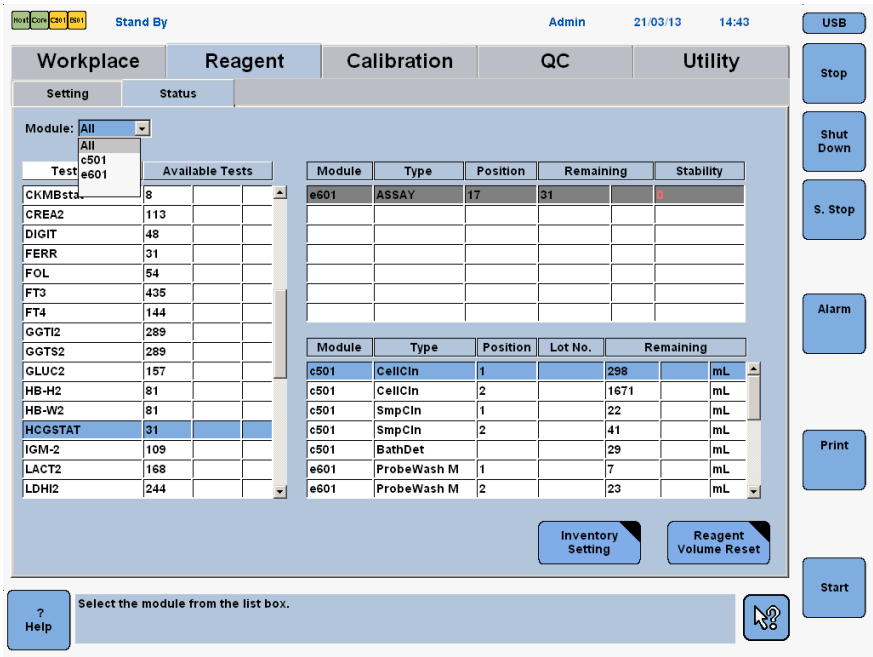

Figure B-68 Reagent Status screen

The **Reagent** > **Status** screen displays reagent data for all tests on the analyzer. The screen comprises a **Module** box (on the top left), a test list, a detailed reagent list (on the top right), and auxiliary reagent list (on the bottom right).

Online Help of the particular field or button.

Replacing auxiliary reagents (c 501)

When replacing auxiliary reagent bottles (such as cell detergent or sample probe detergent bottles), you have to manually reset the software's reagent volume count.

Follow the procedures below to replace auxiliary reagent bottles and reset their volume count:

► To replace a cell detergent bottle

1. Put the system in standby.
2. Open the front door of the module.
3. Replace required reagent bottle and clean the aspiration filter.

   Dispose of the empty bottle according to local regulations.

   See *Cleaning the detergent aspiration filters* on page C-98.

   CAUTION! Incorrect results due to incorrect insertion of aspiration tube. Insert the aspiration tube so that the end of the tube touches the bottom of the bottle. Do not bend the aspiration tube.
4. Reset the volume count under **Reagent** > **Status** > **Reagent Volume Reset**.

   See *Resetting initial volumes of auxiliary reagents (c 501)*.

■

► To replace Sample Cleaner 1 and 2 or EcoTergent

1. Put the analyzer in stand by.
2. Unlock and open the top cover of the module.

   Improper aspiration of detergent due to foam or air bubbles

   - Do not shake or drop the detergent bottles before placing them on the analyzer.
3. Replace required reagent bottle

   Dispose of the empty bottle according to local regulations.
4. Reset the volume count under **Reagent** > **Status** > **Reagent Volume Reset**.

   See *Resetting initial volumes of auxiliary reagents (c 501)*.

■

*Resetting initial volumes of auxiliary reagents (**c** 501)*

The remaining volumes of cell detergents and other auxiliary reagents are monitored by counting down from the initial volume of a full reagent bottle. When you place a new reagent bottle, you always have to manually reset this volume countdown.

Only reset the reagent volume count in the software after a new reagent bottle has been placed.

► **To reset initial volumes of auxiliary reagents**

1. Select a **c** 501 from the **Module** box on the **Reagent** > **Status** screen.
2. Select the current reagent from the auxiliary reagents list (on the bottom right) whose volume needs to be reset.
3. Choose **Reagent Volume Reset**.
4. Choose **OK** to confirm the reset.

■

Replacing auxiliary reagents (e 601)

Illuminated green push buttons indicate the status of the ProCell/CleanCell and PreClean bottles. The green buttons indicate when it is safe for you to replace a reagent bottle:

Off	The bottle is in use, do not replace it when the module is in operation or other mode but standby.
On	This is a standby bottle, do not replace it when the module is in operation or other mode but standby.
Flashing	The bottle is empty, it is safe to replace it. (When air bubbles are detected, this button also flashes.)

For more information, see:
Auxiliary reagents and cleaning solutions on page A-110
Reagents for immunoassay on page B-119

Replacing empty auxiliary reagents

If an auxiliary reagent bottle is empty, the corresponding button is flashing. Replace this auxiliary reagent bottle.

Replacing empty ProCell and CleanCell

Two bottles of ProCell and two bottles of CleanCell are located behind the front door of the **e** 601 module.

For more information, see *ProCell and CleanCell bottles* on page A-111.

► To replace empty ProCell (PC)/CleanCell (CC)

1 Open the middle door of the **e** 601.

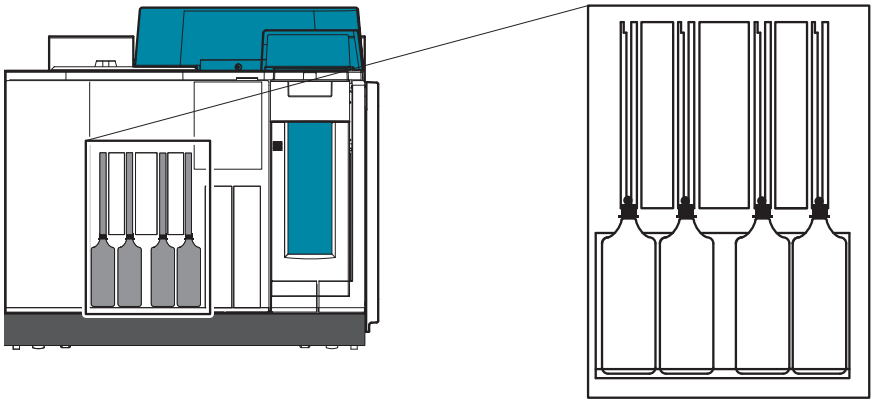

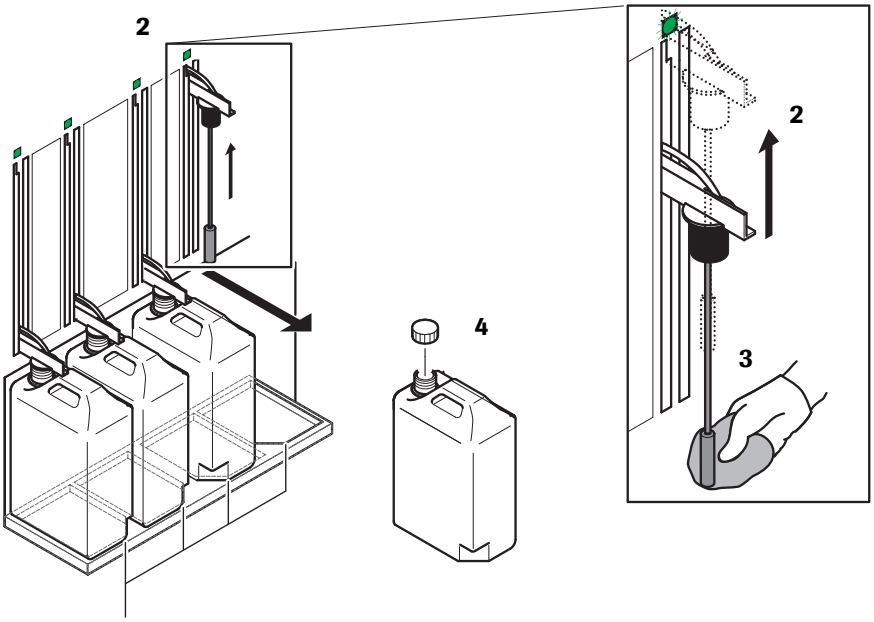

Figure B-69 Replacing ProCell/CleanCell bottles

Only replace a bottle if the green button is flashing.

CAUTION! False results due to loose ProCell/CleanCell aspiration tube filters. Make sure the aspiration tube is pulled up and hooked on to its notch, before removing the bottle. After replacing the bottle, unhook the aspiration tube and lower it slowly into the bottle, do not let it drop into the bottle.

2 Pull the aspiration tube up and to the left to secure them on their respective notches.

3 Absorb the liquid with lint-free gauze squares.

CAUTION! False results due to ProCell/CleanCell bottle misplacement. ProCell and CleanCell bottles are different in shape to fit the keyed position of the bottle stand. Ensure the bottle stand is present before placing the ProCell and CleanCell bottles.

4 Remove the empty bottle, indicated by the flashing green button, and replace it with a full bottle ensuring that it is firmly in place.

Dispose of the empty bottle according to local regulations.

5 Lower the aspiration tube into the new bottle.

6 Press the flashing green button corresponding to the position in which the new bottle has been placed to inform the system that a new bottle was loaded. The button will be illuminated indicating that this is a standby bottle.

Only press the green button after you have replaced a bottle. Do not press the green button under any other circumstances.

7 Close the middle door of the **e** 601.

8 If a ProCell bottle with a new lot number was loaded, enter the lot number on the **Reagent** > **Status** > **Inventory Setting**.

- Choose **Inventory Setting** to open the **Inventory Setting** window.
- Type the new lot number into the box for ProCell Position 1 or 2, respectively.
- Choose **Execute**.

■

Replacing empty PreClean

Two bottles of PreClean are located in the inner side of the front door of the module.

For more information, see *PreClean bottles* on page A-111.

► To replace empty PreClean

1 Open the middle door at the front of the required module.

CAUTION! If you do not properly load the PreClean bottles the volume available for pipetting may be less than expected by the system and therefore cause deterioration in measurement accuracy.

2 Remove the empty bottle, indicated by the flashing green button. Replace it with a full bottle ensuring that it is firmly in place and that the needle has pierced the bottle. Loosen the cap to allow air into the bottle.

Dispose of the empty bottle according to local regulations.

3 Press the flashing green button corresponding to the position in which the new bottle has been placed to inform the system that a new bottle has been loaded. The button will be illuminated indicating that this is a standby bottle.

Only press the green button after you have replaced a bottle. Do not press the green button under any other circumstances.

4 Close the middle door of the **e** 601.

■

Replacing empty ProbeWash

Two bottles of ProbeWash are located on the analytical module near the reagent probe.

See *ProbeWash station* on page A-102.

The 2 ProbeWash bottles can simply be replaced when necessary, as the reagent probe is equipped with a liquid level detector (LLD) which senses the remaining volume.

► To replace empty ProbeWash

1. Put the system in standby or mask the affected module.
2. Remove the empty ProbeWash bottle from position 1.
3. Move the ProbeWash bottle from position 2 to position 1.
4. Remove the cap from the new ProbeWash bottle.

   Dispose of the empty bottle according to local regulations.
5. Place the new ProbeWash bottle in position 2.
6. If the module is masked, unmask the module.
7. The level is checked and the inventory is automatically updated.

■

Replacing auxiliary reagents when not empty (green light is not flashing)

Under some conditions an auxiliary reagent has to be replaced while the green button is not flashing, before the bottle is empty. For example if:

- The expiration date on the label of the auxiliary reagent bottle is exceeded.
- The on-board stability specified in the instructions for use is expired.

Replacing ProCell and CleanCell when not empty

Two bottles of ProCell and two bottles of CleanCell are located behind the front door of the **e** 601 module.

For more information, see *ProCell and CleanCell bottles* on page A-111.

► **To replace ProCell (PC)/CleanCell (CC) in case the green button is not flashing.**

1 Put the system in standby.

2 Open the middle door of the **e** 601.

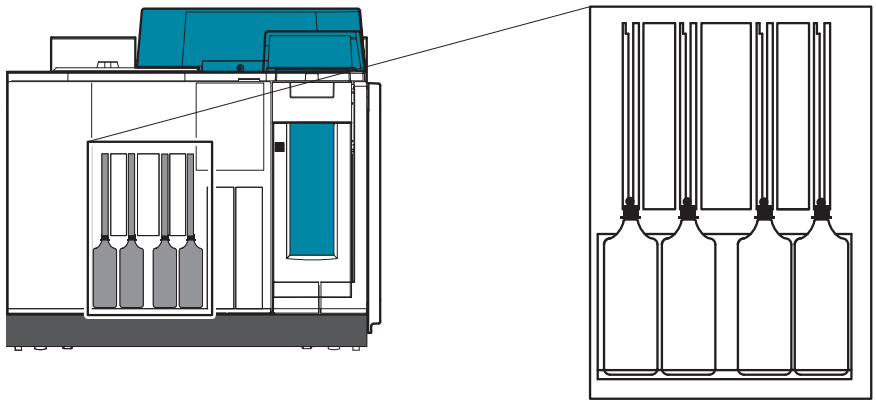

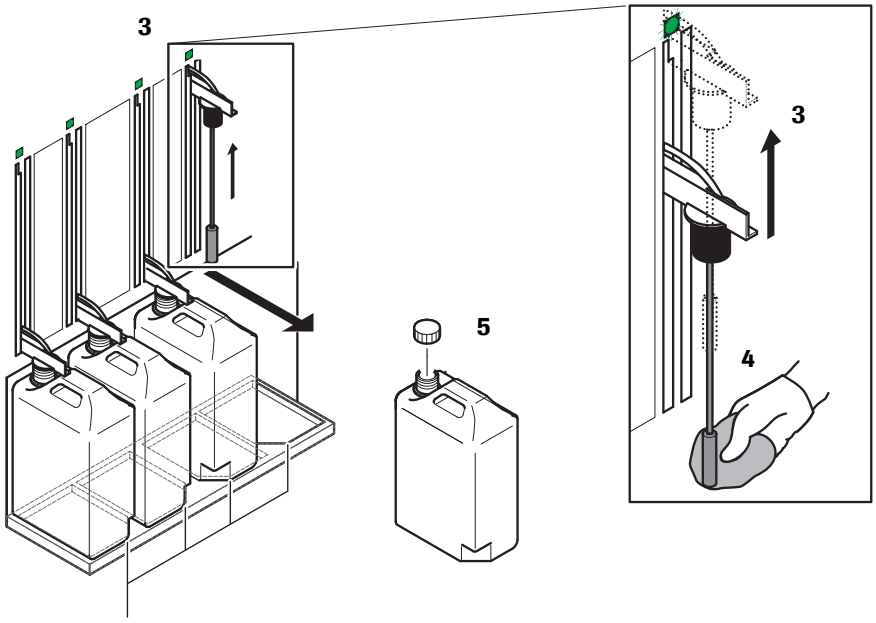

Figure B-70 Replacing ProCell/CleanCell bottles

CAUTION! False results due to loose ProCell/CleanCell aspiration tube filters. Make sure the aspiration tube is pulled up and hooked on to its notch, before removing the bottle. After replacing the bottle, unhook the aspiration tube and lower it slowly into the bottle, do not let it drop into the bottle.

3 Pull the aspiration tube up and to the left to secure them on their respective notches.

4 Absorb the liquid with lint-free gauze squares.

CAUTION! False results due to ProCell/CleanCell bottle misplacement. ProCell and CleanCell bottles are different in shape to fit the keyed position of the bottle stand. Ensure the bottle stand is present before placing the ProCell and CleanCell bottles.

5 Remove the expired bottle and replace it with a full bottle ensuring that it is firmly in place.

Dispose of the empty bottle according to local regulations.

6 Lower the aspiration tube into the new bottle.

7 Press the green button corresponding to the position in which the new bottle has been placed to inform the system that a new bottle was loaded.

The light indication of the green button will be changed as follows:

Before pressing the button		After pressing the button	
Replaced set	**Opposite set**	**Replaced set**	**Opposite set**
Off (in use)	On (standby)	On (standby)	Off (in use)
Off (in use)	Flashing (empty)	Off (in use)	Flashing (empty)
On (standby)	Off (in use)	On (standby)	Off (in use)

Only press the green button after you have replaced a bottle. Do not press the green button under any other circumstances.

8 Close the middle door of the **e** 601.

9 If a ProCell bottle with a new lot number was loaded, enter the lot number on the **Reagent** > **Status** > **Inventory Setting**.

- Choose **Inventory Setting** to open the **Inventory Setting** window.
- Type the new lot number into the box for ProCell Position 1 or 2, respectively.
- Choose **Execute**.

■

Replacing PreClean when not empty

Two bottles of PreClean are located in the inner side of the front door of the module.

For more information, see *PreClean bottles* on page A-111.

► To replace PreClean in case the green button is not flashing

1. Put the system in standby.
2. Open the middle door at the front of the required module.

   CAUTION! If you do not properly load the PreClean bottles the volume available for pipetting may be less than expected by the system and therefore cause deterioration in measurement accuracy.
3. Remove the expired bottle. Replace it with a full bottle ensuring that it is firmly in place and that the needle has pierced the bottle. Loosen the cap to allow air into the bottle.

   Dispose of the empty bottle according to local regulations.
4. Press the green button corresponding to the position in which the new bottle has been placed to inform the system that a new bottle has been loaded.
   - In case the button is blacked out, it will be illuminated indicating that this is a standby bottle. The opposite button will be blacked out indicating that this bottle is in use.
   - In case the button is lit already, it will be with no change indicating that this is a stand by bottle.

   Only press the green button after you have replaced a bottle. Do not press the green button under any other circumstances.
5. Close the middle door of the **e** 601.

■

Replacing consumables and emptying solid waste (e 601)

All consumables (AssayCups and AssayTips) and solid waste are located in the magazine drawer, which consists of the magazine lifter, the magazine waste and the solid waste compartments.

- The lifter can be loaded with new AssayCup and AssayTip magazines.
- The magazine waste compartment contains the empty magazines.
- The solid waste compartment has solid waste containers.

See *Consumables area components* on page A-107.

The green indicator lamp on the top of the magazine drawer indicates when the magazine drawer and door can be opened. In addition, two green buttons to the right of the magazine lifter indicate when the waste containers can be accessed.

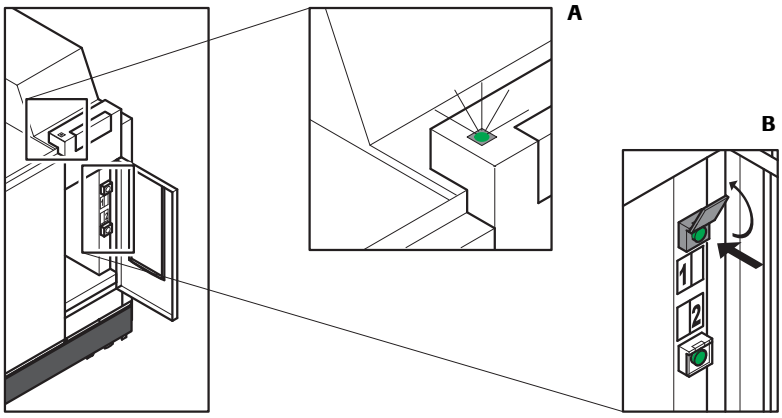

A Indicator lamp of the magazine drawer **B** Indicator lamps of the waste containers

Figure B-71 Indicator lamps of the magazine drawer and waste containers

Indicator lamp state	Indicator lamp (A) (magazine drawer)	Indicator lamp (B) (waste container)
Off		Waste container in use DO NOT replace
On	Drawer safe to open	standby container (empty) DO NOT replace
Flashing	About to operate DO NOT open	Container full, safe to be replaced Empty it immediately

Table B-19 Indicator lamp states of the magazine drawer and waste containers

► To replace AssayCup and AssayTip magazine

1. Pull out the drawer on the right hand side of the module fully.
2. Empty the magazine waste and refill the magazine lifter as required.

   Dispose of the magazine waste according to local regulations.
3. Close the drawer, ensuring that it is fully closed.
4. The level is checked and the inventory is automatically updated the next time the analyzer changes the magazine.

Ensure that the door at the front of the drawer is closed. Otherwise, the magazine lifter will detect the open door the next time it operates and the analyzer will stop.

■

► To empty solid waste

1. Pull out the drawer on the right hand side of the module fully.
2. Remove the solid waste container liners and replace with fresh ones as required.

   Dispose of the solid waste containers according to local regulations.
3. Close the drawer, ensuring that it is fully closed.
4. Open the door at the front of the drawer.

Only press the green button after you have replaced a bottle. Do not press the green button under any other circumstances.

5. Press the flashing green button (to the right of the AssayCup and AssayTip tray magazine) corresponding to the container(s) emptied to update the system.
6. Close the door ensuring that it is fully closed.

Ensure that the door at the front of the drawer is closed. Otherwise, the magazine lifter will detect the open door the next time it operates and the analyzer will stop.

■

Reagent Overview button

By changing its color, the **Reagent Overview** button indicates potentially insufficient amounts of reagent on the module currently selected in the **Module Overview** area. It also indicates when QC results are out of range and if there is no valid calibration available:

Button in Module Overview area	Color	Meaning
Reagent Overview	Red	A reagent is empty and there is no second **cobas c** pack or **cobas e** pack on this particular module.
	Yellow	The number of tests remaining for a reagent is less than the yellow alarm level.
	Purple	The number of tests remaining for a reagent is less than the purple alarm level.

Table B-20 Colors of Reagent Overview button in Module Overview area

Choose this button to display the **Reagent Overview** window. This window displays an overview of the consumables loaded on the module currently selected.

Reagent Overview c 501 module

Select a **c** 501 module in the **Module Overview** area of the **System Overview** screen and choose **Reagent Overview** to display this screen. It consists of 3 areas, the **Reagent** area, **Inventory** area, and **ISE** area.

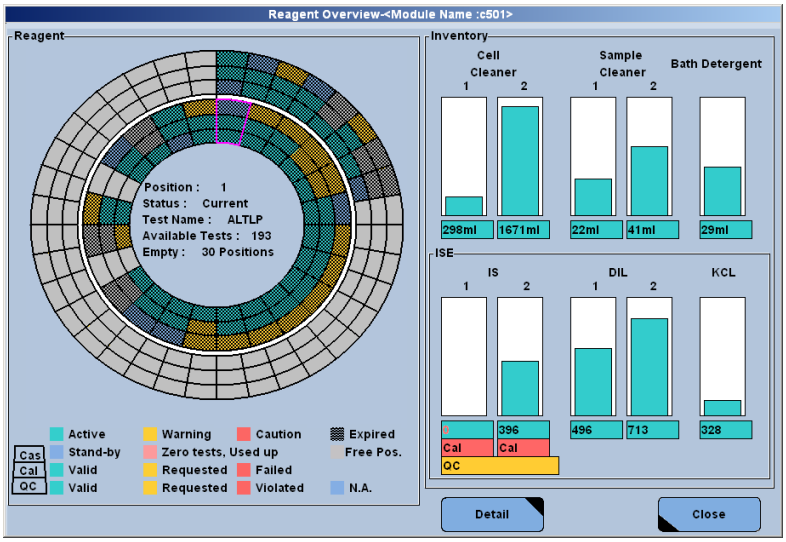

Figure B-72 Reagent Overview window (**c** 501 module)

A reagent mandatory message is displayed on the **Reagent Overview** screen if a mandatory reagent is not on board.

This function is available only if the test of the missing reagent has been defined as mandatory under the **Utility** > **Module Set** > **Test Assignment**.

Reagent area

Use this area to view the status of the **cobas c** packs, loaded on the module. This area comprises a graphic representing the reagent disk and a legend.

The graphic is divided into 2 large rings. Each of the large rings is subdivided into 3 subrings. The 24 segments of the inner large ring and the 36 segments of the outer large ring represent the 60 **cobas c** packs positions within the reagent compartment.

Each segment shows the following information:

- **Cas**: Reagent status (inner subring)
- **Cal**: Calibration status (middle subring)
- **QC**: QC status (outer subring)

Choosing a segment displays detailed information about the **cobas c** pack (**Position**, **Status**, **Test Name** and **Available Tests**) in the center of the graphic.

Legend

The legend at the bottom of the **Reagent** area explains the colors represented in the segments of the reagent disk graphic.

1. Inner subring: **Cas** (Cassette = **cobas c** pack)

	Active	This **cobas c** pack is currently in use.
	Warning	Remaining tests in this **cobas c** pack set below yellow alarm level (**Utility** > **System** (**Page 2/4**) > **Reagent Level Check**).
	Caution	There is no more reagent available for this assay on this module.
	Stand-by	This **cobas c** pack is currently not in use.[(a)]
	Zero tests, Used up	The **cobas c** pack has been used up and is empty. There is still reagent available in another **cobas c** pack on this module.
	Free Pos.	There is no **cobas c** pack in this channel.
	Expired	The **cobas c** pack has exceeded its expiration date.

(a) Standby **cobas c** packs are already on board but not currently in use.

2. Middle subring: **Cal** (Calibration)

	Valid	A valid calibration is available.
	Requested	A calibration has been requested.
	Failed	The calibration of the **cobas c** pack has failed.

3. Outer subring: **QC** (Quality Control)

	Valid	QC result is within the confidence limits.
	Requested	A QC has been requested.
	Violated	QC result is not within the confidence limits.
	N.A.	Not applicable.

For diluent and cleaner **cobas c** packs, only the inner subring (**Cas**) contains information.

Reagent information

In the middle of the reagent disk, information about the selected **cobas c** pack is displayed.

The following information is provided:

Position	Position of the **cobas c** pack in the reagent disk.
Status	Indicates that the **cobas c** pack is active or standby.
Test Name	Name of the **cobas c** pack.
Available Tests	Indicates the total number of determinations that can be measured with the currently available **cobas c** packs (including the standby **cobas c** packs). If a **cobas c** pack contains diluent or cleaner, the total volume is displayed in ml.
Empty	Number of empty positions on the reagent disk.

Inventory area

The **Inventory** area displays the amount of auxiliary reagents on the module previously selected on the **System Overview** screen.

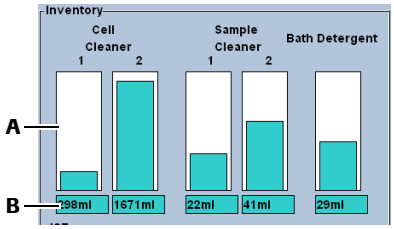

A Bar-chart for the remaining volume
B Color-coded bar

Figure B-73 Inventory area of Reagent Overview window

Abbreviation	Unit	Color	Description
Cell Cleaner 1/2	mL		Cell Wash Solution I / NaOH-D and Cell wash Solution II / Acid Wash
		Yellow	Volume ≤ 50 mL
		Red	Bottle empty
Sample Cleaner 1/2	mL		Sample Cleaner 1 and Sample Cleaner 2
		Yellow	Volume < yellow alarm level
		Red	Bottle empty
Bath Detergent	mL		EcoTergent
		Yellow	Volume < yellow alarm level
		Red	Bottle empty

Table B-21 **c** 501 module reagent types

ISE area

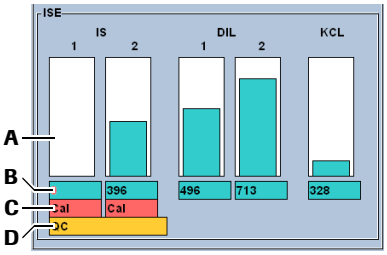

A Bar-chart for the remaining number of tests
B Color-coded bar for the remaining number of tests that can be performed with the ISE reagents
C Color-coded bar for the calibration status
D Color-coded bar for the QC status

Figure B-74 ISE area of Reagent Overview window

The **ISE** area displays the amount of reagents using bar-charts (**A**). The first bar (**B**) below each bar-chart indicates the remaining number of tests for each ISE reagent. The second and the third bar below the bar-charts provide additional, color-coded information on the statuses of calibration (**C**) and QC (**D**).

If this field is empty after changing an ISE reagent bottle, the analyzer has not checked the remaining volume yet.

For information about remaining volume check, see *ISE reagent replacement* on page B-110.

Abbreviation	Unit	Description
IS	test	Internal standard solution
DIL	test	Diluent
KCL	test	Reference solution (ISE Ref.)

Table B-22 **c** 501 (ISE) reagent types

Two color-coded bars below the IS 1 and IS 2 bar-charts provide additional information on the statuses of calibration and QC.

1. First colored bar (directly below volume indication field): Calib

	Valid	A valid calibration is available.
	Requested	A calibration has been requested.
	Failed	The calibration of the bottle has failed.

2. Second colored bar: QC

	Valid	QC result is within the confidence limits.
	Requested	Requested for QC measurement.
	Violated	QC result is not within the confidence limits.
	N.A.	Not applicable.

Detail window

Choose the **Detail** button to display the **Detail** window. This window displays more detailed information about the selected **cobas c** pack.

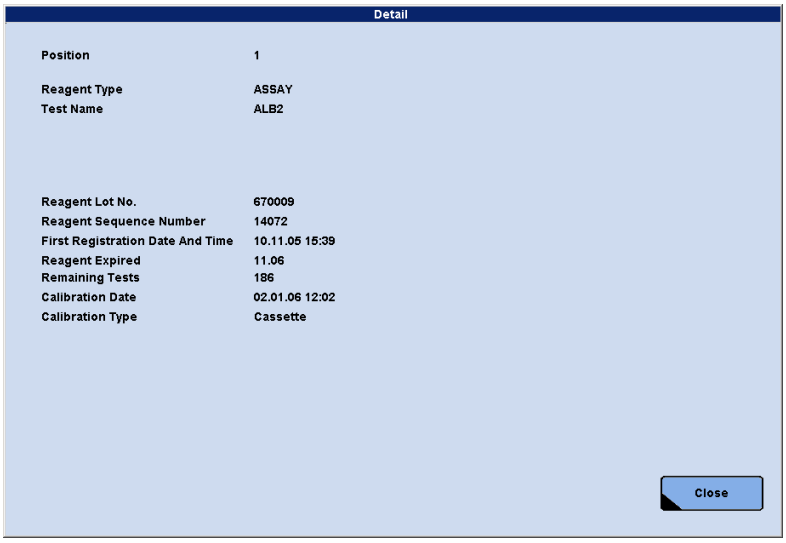

Figure B-75 Detail window (**c** 501)

For more information about the **Detail** window, refer to the *Online Help* of this window.

Reagent Overview e 601 module

Select an **e** 601 module in the **Module Overview** area of the **System Overview** screen and choose **Reagent Overview** to display this screen. It consists of 2 areas, the **Reagent** area and the **Inventory** area.

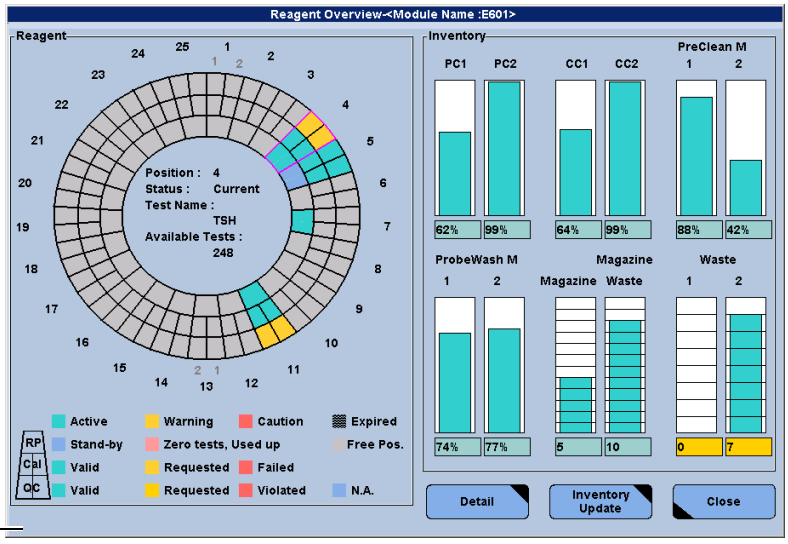

A Reagent mandatory message

Figure B-76 Reagent Overview window (**e** 601 module)

A reagent mandatory message is displayed on the **Reagent Overview** screen if a mandatory reagent is not on board. This may occur if a reagent is not loaded or not available. The system will not start if this reagent is missing.

This function is available only if the test of the missing reagent has been defined as mandatory under the **Utility** > **Module Set** > **Test Assignment**.

Reagent area

Choosing a segment of the Reagent Disk graphic displays detailed information of the **cobas e** pack in the center of the graphic. The following information is displayed:

- **Position**
- **Status**
- **Test Name**
- **Available Tests**

The color of each segment corresponds to the status of the respective **cobas e** pack (inner ring), the status of the calibration (middle ring), and the status of the QC (outer ring). Segments of the middle and outer ring are subdivided in two subsections corresponding to the two measuring channels.

The legend at the bottom of the **Reagent** area explains the colors represented in the segments of the reagent disk graphic.

If the **e** 601 test is not assigned to both measuring cells, the subsection for the unassigned measuring cell is displayed in gray.

1. Inner ring: **RP** (**cobas e** pack)

	Active	This **cobas e** pack is currently in use.
	Warning	Remaining tests in this **cobas e** pack below yellow alarm level (**Utility** > **System** (**Page 2/4**) > **Reagent Level Check**).
	Caution	There is no more reagent, diluent, or pretreatment available for this test on this module. A reagent or pretreatment **cobas e** pack is not linked to its required partner **cobas e** pack (link status **Free**). Partner **cobas e** pack is not on board.
	Stand-by	This **cobas e** pack is currently not in use. Standby **cobas e** packs are already on board but not in use at present.
	Zero tests, Used up	The **cobas e** pack has been used up and is empty. Reagent, diluent, or pretreatment for this test is still available in another **cobas e** pack on this module.
	Free Pos.	There is no **cobas e** pack in this position.
	Expired	The **cobas e** pack has exceeded its expiration date.

2. Middle ring: **Cal** (Calibration)

	Valid	A valid calibration is available.
	Requested	A calibration has been requested.
	Failed	The calibration of the **cobas e** pack has failed.

3. Outer ring: **QC** (Quality Control)

	Valid	QC result is within the confidence limits.
	Requested	A QC has been requested.
	Violated	QC result is not within the confidence limits.
	N.A.	Not applicable.

Inventory area

This area displays the amount of auxiliary reagents, magazines, magazine waste and solid waste. The abbreviations have the following meanings:

Abbreviation	Unit	Description
PC1/PC2	%	ProCell bottle 1 and 2 One bottle empty ⇒ number box turns yellow Both bottles empty ⇒ number box turns red
CC1/CC2	%	CleanCell bottle 1 and 2 One bottle empty ⇒ number box turns yellow Both bottles empty ⇒ number box turns red
PreClean M 1/2	%	PreClean bottle 1 and 2 One bottle empty ⇒ number box turns yellow Both bottles empty ⇒ number box turns red
ProbeWash M 1/2	%	ProbeWash bottle 1 and 2 One bottle empty ⇒ number box turns yellow Both bottles empty ⇒ number box turns red
Magazine	Actual number (max 12)	Full magazine with AssayTips and AssayCups. Each full magazine ⇒ 1 blue box One magazine remaining ⇒ box turns yellow No magazines remaining ⇒ box turns red
Magazine waste	Actual number (max 12)	Empty magazine Each space available for empty magazine ⇒ 1 blue box Space for one empty magazine remaining ⇒ box turns yellow No space for empty magazines remaining ⇒ box turns red
Waste 1/2	Actual number in magazines	Solid waste for AssayTips and AssayCups. Each empty magazine ⇒ 1 blue box One solid waste remaining ⇒ box turns yellow No solid waste remaining ⇒ box turns red

Table B-23 Reagent and consumable types

Detail window

Choose the **Detail** button to display the **Detail** window. This window displays more detailed information about the selected **cobas e** pack.

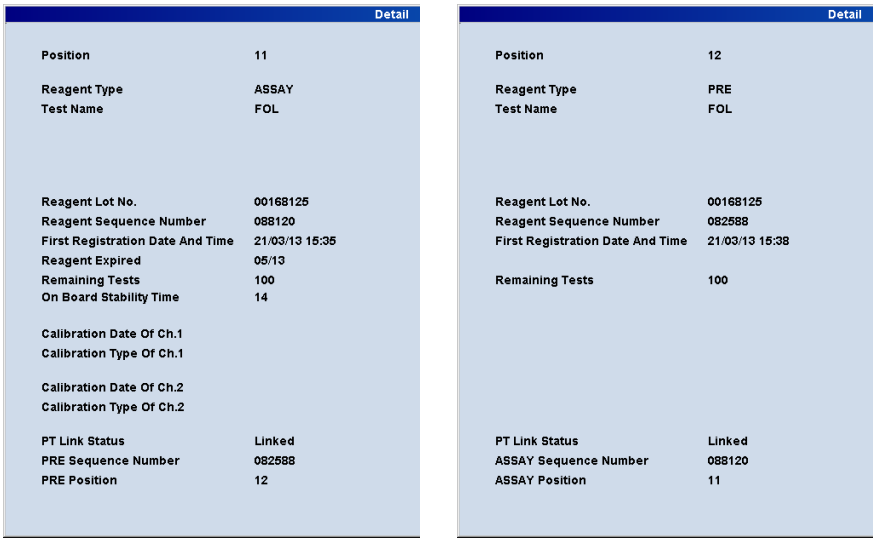

Figure B-77 Detail window of an assay and a pretreatment (**e** 601)

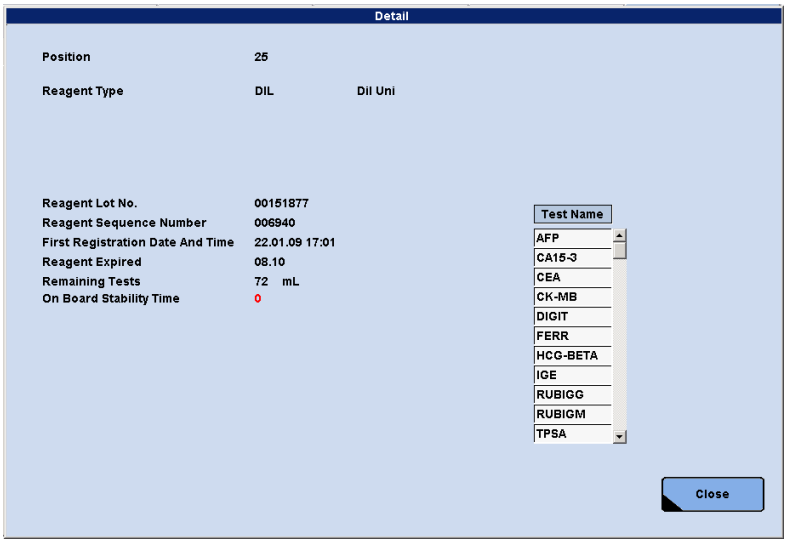

Figure B-78 Detail window of a diluent (**e** 601)

For more information about the Detail window, refer to the *Online Help* of this window.

Inventory Update window

Use the **Inventory Update** button to execute an inventory update for an **e** 601 module.

This button is a shortcut to the **Inventory Update** maintenance window.

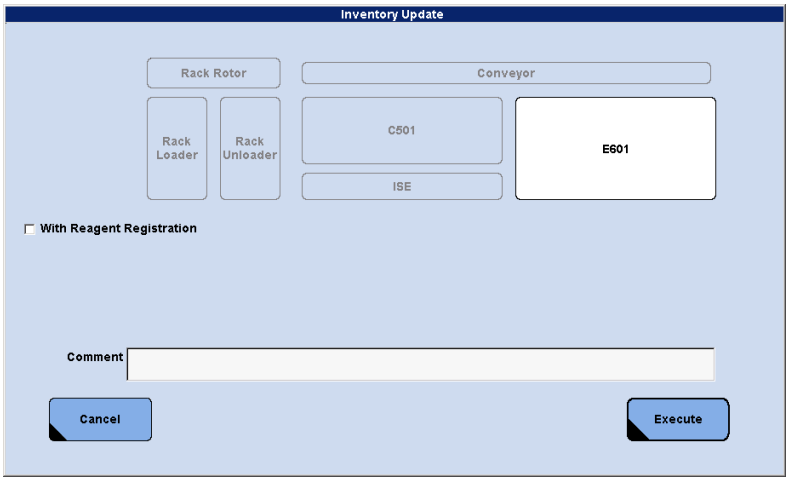

Figure B-79 Inventory Update window

If inventory update is executed the following actions are performed:

- Update the number of magazines in the magazine lifter
- Update the number of magazines on the magazine waste
- Check and update of ProbeWash solutions 1 & 2

The inventory update function is only available for **e** 601 module.

With Reagent Registration Select this check box to initiate a reagent registration as part of the inventory update.

Calibration

This chapter provides descriptions of special tasks that are not usually part of the daily workflow. It is meant to complement the chapter Daily operation, where everyday tasks and common procedures for running the **cobas** 6000 analyzer are described.

In this chapter

Chapter **11**

Calibration concept B-159
Causes for automatic calibration recommendations B-160
Calibration concept – c 501 ..... B-162
Calibration concept - ISE applications B-163
Calibration concept - photometric applications B-164
Lot and cassette calibrations for cobas c packs B-165
Calibration quality criteria for photometric applications B-165
Calibration concept – e 601 ..... B-166
Lot and cassette calibrations for cobas e packs B-167
Calibration quality criteria for immunological applications B-168
Calibration concept – masking B-169
Overview B-170
Calibration Status screen B-170
Requesting and cancelling calibrations manually B-171
Reviewing calibration data B-173
Checking calibrations of photometric tests B-173
Checking calibrations of ISE tests B-177
Checking calibrations of e 601 tests B-178
Calibration factors (c 501) B-180
Selecting tests for start-up calibrations B-181
Calibration Calibrator screen B-182
Assigning calibrator positions B-182
Loading calibrator vials for e 601 tests B-184
Calibration Install screen B-185
Checking information about already installed calibrators B-186
Downloading or updating calibrator data B-188
Editing calibrator concentrations (c 501) B-193
Changing decimal places used for reportable data (c 501) B-195
ISE calibration B-197

System Overview screen B-198
Calibrating tests during operation B-198

Calibration concept

The following section gives an overview of the calibration concept applied by the **cobas** 6000 analyzer series; it provides a basic understanding of the various calibration functionalities implemented in the analyzer and its software.

For instructions on how to perform calibrations, see *Calibration and QC Select button* on page B-55.

What is calibration?

Calibration is the process that establishes a relation between measurement values (such as absorbance values or ECL signals) and the corresponding results (concentration of an analyte).

This process may comprise the complete setting up of a new calibration curve or it is only the update of one or two parameters of an existing calibration curve. In either case the term *calibration* is appropriate.

Automatic calibration

The relation between measurement values and results is subject to various environment and reagent conditions and may drift in the course of time. Therefore it is necessary to repeat calibrations regularly. To keep the resulting calibration management simple and efficient, the system automatically recommends calibrations.

To get an overview of the functionalities provided by the **cobas** 6000 analyzer series for automating calibration, refer to the following section.

See *Causes for automatic calibration recommendations* on page B-160.

Validation of calibration

After a calibration is performed, it needs to be validated. The system performs this task through automatic calibration checks. Whenever it detects an irregular condition or result, the calibration is classified as failed, a calibration alarm is issued, and the system recommends that calibration be repeated.

For a list of calibration alarms and for an overview of application-specific calibration quality criteria, see *Calibration quality criteria for immunological applications* on page B-168.

Information on the status of the calibrators that are currently processing can be viewed on the **Workplace** > **Calib. Review** screen.

See *Calib. Review screen* on page B-101.

Calibration masking

If a calibration fails one or more quality criteria applied in the validation process, tests should no longer be performed with the affected reagent. This is achieved automatically by means of the auto masking function.

For more information, see *Calibration concept – masking* on page B-169.

Causes for automatic calibration recommendations

The **cobas** 6000 system provides the following features:

- Automatic calibration at start-up of the analyzer. Manual calibration of a group of applications by selection of the **Start Up** button.
- Automatic calibration recommendation at change of reagents (Changeover calibration):

  Calibration at lot change of **cobas c** pack or **cobas e** pack
- Automatic calibration recommendation without reagent change:
  - Calibration at regular intervals (Timeout)
  - Calibration in combination with Preventive action (Calib Now)
  - Calibration due to QC out of range (QC-triggered calibration (QC Violation))
- Automatic recommendation for recalibration when a calibration failed (Failed)

The different calibration functions can be combined. For automatic calibration without reagent change, you have to decide on one workflow: Timeout calibration or QC violation.

Start-up calibration

With this function you can select a predefined set of tests that are calibrated when you order a start-up calibration manually. The tests for Start up calibration are defined on **Calibration** > **Status** > **Start Up Setting**.

See *To select tests for start-up calibration* on page B-181.

Changeover calibration

Calibrations also have to be performed when the following events occur:

- A change in reagent lot (of **cobas c** packs or **cobas e** packs) takes place.
- A change in a **cobas c** pack (regardless of the lot). This depends on the setting in **Utility** > **Application** > **Calib**.
- At installation of a new test on the system

Timeout

Calibrations are performed at regular intervals to compensate for changes over time in reagents and in the measurement systems. Timeout calibrations can be performed for lot or cassette calibration.

A cassette calibration is displayed in the software and on the reports as **R.Pack** calibration.

QC-triggered calibration (QC Violation)

Calibration recommendation will be initiated if the QC results are outside the confidence limit. Up to three different controls can be defined.

For each application you have to decide whether calibration should be performed time-triggered (Timeout) or QC-triggered (QC violation).

It is recommended to decide on one calibration workflow. Either time-triggered or QC-triggered calibration should be defined for all applications.

When a new application is loaded, time-triggered calibration is the default setting and the intervals recommended by Roche Diagnostics are predefined. If you prefer a workflow with QC-triggered calibration, you have to activate **QC Violation**.

For information on the necessary QC violation settings, see *Auto calibration* on page B-269.

Calib Now

This automatic calibration function is active only if **Preventive Action** is activated. When a calibration times out during the period specified in the **Remaining Time** box on the **Calibration** > **Status** screen, the system recommends a calibration indicating *Calib Now* as calibration cause.

Calibration concept – c 501

This section describes the calibration concept for ISE and photometric applications.

General calibration rules

The general calibration rules are listed below:

- Calibration is best done as part of the daily preroutine operation. However, it can be done at any time during operation as well.
- Multi-analyte calibrators are usually used. Calibrator data are downloaded via **cobas** link.
- Expired calibrators should not be used. If expired calibrators are used, no alarm is issued.
- Calibrations are carried out in duplicate.
- Barcoded calibrators:

  Roche Diagnostics calibrators are always supplied with barcode labels (inserted in the calibrator kit). The labels must be placed on a tube.

  A barcode for water is also available but must be ordered separately.
- Non-barcoded calibrators can be used as well. In this case calibrator vials have to be assigned to specific racks and positions (rack assignment).
- Calibrators can be used several times for calibrations.
- If calibration is recommended due to QC violation the control material can be run again. If the controls are then within their confidence limits, the calibration recommendation is removed.

Positioning of calibrators

Calibrators are placed in calibrator racks (black racks).

- Non-barcoded calibrators have to be assigned to specific racks and positions.

  See *Assigning calibrator positions* on page B-182.
- Barcoded calibrators and their racks must not have a rack assignment.
- Barcoded and non-barcoded calibrators must not be placed on one rack. These racks may not be processed correctly by the system.

Calibration concept - ISE applications

Full calibration

Full calibration for Na^+, K^+, and Cl^- requires the following three calibrator solutions:

Product name	Short name used in this documentation	Short name used in the software	Calibration method	Code
ISE Standard low	ISE Low	Std (1) or S1	two-point or full	502
ISE Standard high	ISE High	Std (2) or S2	two-point or full	503
ISE Standard high	ISE High	Std (3) or S3	blank or full	763

Table B-24 Calibrators for ISE

The slope of the calibration curve is calculated from ISE Standards 1 and 2.

A full calibration is required at least every 24 hours.

One-point calibration

The ISE internal standard (ISE IS) is measured before and after each routine sample (only one measurement for sample analyses in succession). These measurements are used to correct for system-related drift (junction potential differences, differences in electrode conditions, etc.).

The ISE IS is measured during calibration as well.

Sample type specific ISE calibration curves

It is possible to set up and use two independent sets of calibration curves (**Type A** and **Type B**) for different sample types for Na^+, K^+, and Cl^-.

If only one calibration curve is used for the different sample types, only one calibration is performed.

For information on configuration and assignment of calibrations, see:
Setting up individual calibration curves for each ISE sample type on page B-280
ISE calibration on page B-197.

Calibration concept - photometric applications

Types of calibration curves

There are six different types of calibration curves possible on **c** 501 modules. One of six different types of mathematical functions is used to describe the relation between a measured value and a result.

In this document and in the user interface (UI), these types of calibration curves are called calibration types. The names of the calibration types are:

Linear	RCM2T1	Spline
RCM	RCM2T2	Line Graph

Table B-25 Calibration types for photometric tests

Each calibration type corresponds to one type of mathematical function. For example, *Linear* corresponds to a linear equation, *RCM2T2* to an exponential function.

For more information about the calibration methods, refer to *Calibration principles* in the Online Help.

Calibration curve parameters

A specific calibration curve is defined by its calibration type (mathematical function) and its parameters. The names of these parameters in the user interface are:

S1Abs., K, A, B, and C.

A Linear calibration curve, for example, is defined by two parameters (S1Abs. and K), an RCM calibration curve is defined by four, and a Spline can require up to six parameters. When the system performs a calibration, it redetermines these parameters by fitting the calibration curve to the newly measured values.

Calibration methods

Calibrations are performed with varying numbers of calibrators. Up to six calibrators are used for a full calibration of certain photometric tests. However, not all calibrators available for a test need to be used in every calibration. To define which calibrators are used, there is a choice of up to four different calibration methods.

The availability of calibration methods depends on the kind of test to be calibrated. The Table B-26 displays all calibration methods and the corresponding calibrators.

	Photometric tests	**ISE tests**
Blank	Std (1)[(a)] is used	Only ISE High [Std (3)] is used
Span	Only one calibrator out of Std (2)-Std (6)[(b)] is used	Not available
2 Point	Std (1) and a second calibrator are used	ISE Low [Std (1)] and ISE High [Std (2)] are used
Full	All calibrators [Std (1)-Std (6)] are used (for nonlinear calibration types)	ISE Low [Std (1)], ISE High [Std (2)], and ISE High [Std (3)] are used

Table B-26 Calibration methods on **c** 501 module

(a) Std (1) is the first standard solution, that is, the calibrator of the lowest analyte concentration. For many photometric applications, water is used as a blank calibrator.

(b) Std (2)-Std (6) refer to calibrators assigned to an application under **Utility** > **Application** > **Other**.

Lot and cassette calibrations for cobas c packs

Lot calibration

Lot calibration data are reagent lot specific for each test. Lot calibration data are transferred to other **cobas c** packs belonging to the same reagent lot. The lot calibration data are applied to result calculations for all patient samples and controls using **cobas c** packs of the same lot after a valid lot calibration was generated.

A lot calibration can only be generated from a *fresh* **cobas c** pack (one that was not previously on the instrument). The calibration must be performed within 24 hours after the **cobas c** pack has been registered by the instrument.

Do not use expired **cobas c** packs. Lot calibrations cannot be generated with expired **cobas c** packs. Calibrations with expired **cobas c** packs will be released as cassette calibrations only.

Cassette calibration

The cassette calibration data are **cobas c** pack-specific. A cassette calibration is generated when a **cobas c** pack is calibrated after it has been on board longer than 24 hours after registration.

A cassette calibration is also generated when an expired **cobas c** pack is calibrated within 24 hours after registration.

A cassette calibration is displayed as **R.Pack** calibration in the **Calibration** > **Status** screen.

Newest calibration

Newest calibration is a function that permits replacement of empty **cobas c** packs during operation without performing a calibration.

For a **cobas c** pack for which no calibration data exists, the newest calibration result is transferred at the time of its registration. This function is used to avoid the following situation: A **cobas c** pack of a new lot that was loaded on the instrument does not have any calibration data. The newest calibration data (the data of the last valid lot calibration) are transferred to this new lot.

Calibration quality criteria for photometric applications

Calibration measurements are automatically checked against various quality criteria. These criteria are test-specific and therefore the corresponding limit values are individually set for each photometric application.

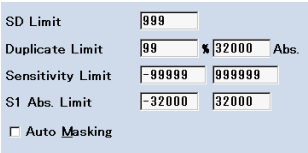

Figure B-80 **Calib.** tab on **Utility** > **Application** screen

Calibration concept – e 601

Calibration is the process that establishes a relation between measurement values (such as ECL signals) and the corresponding results (concentration of an analyte). This relation depends on both analyzer conditions and reagent conditions. For this reason, Roche Diagnostics supplies a master calibration curve for each application (generated during production of the reagent kit) and—at the customer's site—the analyzer generates an adjustment of this master calibration curve under the local routine laboratory conditions.

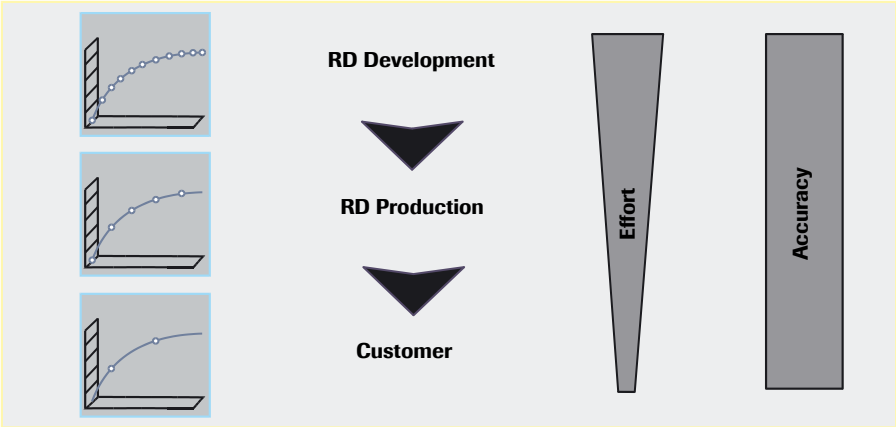

Figure B-81 Calibration concept **e** 601

General calibration rules

The general calibration rules are listed below:

- Calibration is best done as part of the daily preroutine operation. However, it can be done at any time during operation as well.
- Test-specific calibrators are used. Calibrator data are downloaded via **cobas** link or they are encoded within the **cobas e** pack barcode.
- Calibrations are carried out in duplicate.
- Expired calibrators cannot be used.
- If calibration is recommended as QC violation because of results out of confidence limit, the control material can be run again. If the controls are then within their confidence limits, the calibration recommendation is removed.

Positioning of calibrators

Calibrators are placed in calibrator racks (black racks).

Important: Do not separate the vials of a calibration set. They have to be in consecutive positions.

Limitation of calibration events

Each calibrator vial barcode can be used for a maximum of four calibration events. After that, the analyzer does not accept the calibrator vial and will not perform the calibration. A calibration of a measuring cell is one calibration event.

Valid calibrator lots

Every **cobas e** pack lot is linked to 5 calibrator lots. The valid lot numbers are encoded in the **cobas e** pack barcode.

It is possible to download calibrator data for non-valid calibrator lots. A calibration with a non-valid calibrator lot is not possible.

Inpack calibrator

Some tests for the **cobas e** 601 are delivered together with a calibrator, a so-called inpack calibrator. An inpack calibrator can only be used for the corresponding **cobas e** pack lot.

Inpack calibrators are installed by scanning the **cobas e** pack barcode during reagent registration. Downloading of calibrator data from **cobas** link is not possible. Up to five calibrator lots can be stored for an inpack calibrator.

Delete inpack calibrators which are not in use anymore before using new once.

Lot and cassette calibrations for cobas e packs

Lot calibrations

Every new reagent lot must be calibrated. A lot calibration is generated if a calibration is carried out within 24 hours (from first registration of the **cobas e** pack on the **e** 601 module) and all calibration criteria are met.

- Calibrations are measuring cell-specific, that is, each measuring cell has to be calibrated separately.
- Once a lot calibration has been accepted, it is automatically used for all **cobas e** packs of the same lot that are registered afterwards.

Do not use expired **cobas e** packs. Lot calibrations cannot be generated with expired reagents. Calibrations with expired reagents will be released as cassette calibrations only.

Cassette calibrations

A calibration automatically becomes a cassette calibration if the **cobas e** pack has been on the module for longer than 24 hours before the calibration is performed.

A cassette calibration is also generated when an expired **cobas e** pack is calibrated within 24 hours after registration.

The generated calibration curve is only valid for the **cobas e** pack from which it was measured (**cobas e** pack number specific).

A cassette calibration is displayed in the software and on the reports as **R.Pack** calibration.

Calibration quality criteria for immunological applications

Calibration measurements are automatically checked against various quality criteria. The assessment is different for qualitative and quantitative assays. The following table shows which criteria are used for quantitative assays and which are used for qualitative assays.

Results of the calibration checks are displayed in the **Calibration Result** (Immune) window. To open this window, select an **e** 601 test from the **Calibration** > **Status** screen and choose **Calibration Result**.

Quantitative assays	Qualitative assays
Missing values	Missing values
Monotony of curve	Slope
Minimum signal	Minimum signal
	Maximum signal
Minimum difference	Minimum acceptable difference
Deviation of duplicate measurement	Deviation of duplicate measurement
System error	System error, calibration factor
Calibration factor	

Table B-27 Quality criteria for quantitative and qualitative assays

For more information about the calibration criteria, refer to *Calibration principles* in the Online Help.

Calibration concept – masking

Automatic calibration masking is a function that masks a **cobas c** pack or **cobas e** pack for a module or measuring cell when no valid calibration is available for this particular module or measuring cell.

This function is activated (or deactivated) for the entire system under **Utility** > **System** (**Page 2/4**) > **Calib Mask Setting**. When activated, the function can be selected individually for each application on the **Calib.** tab of the **Utility** > **Application** screen. This setting is set as the default in the applications.

See *Auto masking* on page B-269.

Failed calibrations

When a calibration is successful, the calibration data are available for the measurement of patient samples and controls. When a calibration fails one or more quality criteria, this calibration gets the status *Failed*. *Failed* calibration data is not available for the corresponding **cobas c** pack or **cobas e** pack.

If automatic calibration masking is activated, the corresponding test with the *Failed* calibration is masked. If automatic calibration masking is not activated, the test is not masked but data alarms are attached to the results.

cobas c pack changeover

When a changeover request is present and automatic calibration masking is not activated, this **cobas c** pack will work with the last valid lot calibration data for this test (newest calibration). No alarm is attached to this result.

See *Newest calibration* on page B-165.

Reject button

A *Failed* calibration can be *rejected* by the operator (**Reject** button on **Calibration** > **Status**) so that the latest successful calibration, if it exists, is used for the upcoming samples and controls.

Overview

The calibration menu contains three screens: **Calibration** > **Status**, **Calibration** > **Calibrator**, and **Calibration** > **Install**. This chapter describes important commands accessed via these screens as well as various information displayed on them.

However, this chapter does not cover all possible commands. For a complete description of all fields of the software's user interface, refer to the *Online Help*.

For more information about the calibration menu, refer to the *Online Help*.

Calibration Status screen

The following sections explain certain tasks associated with the **Calibration** > **Status** screen. Not all tasks are described, but the most important ones.

For a complete description of all elements of the user interface, refer to the *Online Help*.

To display this screen choose **Calibration** > **Status**.

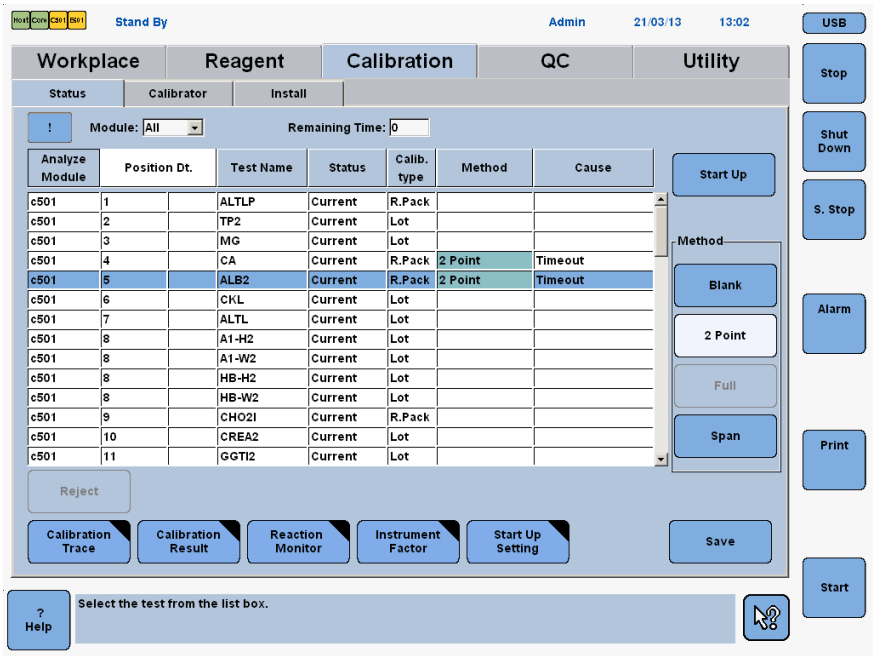

Figure B-82 Calibration > Status screen

This screen shows detailed information about the calibration status of the tests on the modules selected in the **Module** list box. This screen is used to select tests for start up, timeout, changeover or manual calibrations.

For more information about the calibrator status during calibration, see *Calib. Review screen* on page B-101.

Exclamation Point button

This button turns yellow if the displayed status list should be updated. The displayed information may be out-of-date, for example, if a calibration has been performed in the meantime. Choose the **Exclamation Point** button to update the status list.

For information about particular tasks associated with this screen, see:
Requesting and cancelling calibrations manually on page B-171
Reviewing calibration data on page B-173
Calibration factors (c 501) on page B-180
Selecting tests for start-up calibrations on page B-181

Exclamation Point button

This button turns yellow if the displayed status list should be updated. The displayed information may be out-of-date, for example, if a calibration has been performed in the meantime. Choose the **Exclamation Point** button to update the status list.

Online Help of the particular field or button.

Requesting and cancelling calibrations manually

According to the intended use, calibrations are automatically recommended by the system and accepted by the operator via the **System Overview** screen.

See *Calibration and QC Select button* on page B-55.

Regardless of these system recommendations calibrations can be manually selected and deselected as well.

► To request calibration for a test manually

1 Choose **Calibration** > **Status**.

2 Select the test and reagent (**Current** or **SBx**) that needs to be calibrated from the list.

The selected line is highlighted in blue.

Missing test in status list

A test only occurs in the status list if the corresponding **cobas c** pack or **cobas e** pack is on board.

3 Select the appropriate button in the **Method** area for a **Blank**, **2 Point**, **Full**, or **Span** calibration.

The selected option appears in the **Method** column highlighted in green, the **Cause** column indicates **Manual**, and the **Save** button turns yellow.

4 To request calibrations for additional reagents and tests repeat steps 2 and 3.

5 Choose **Save** to save the changes.

All listed tests and reagents that have an entry in the **Method** column are highlighted in green. This corresponds to a requested calibration.

In case there are reagents with less than 10 tests on board, a confirmation window opens and it is possible to cancel the calibration or QC request for these reagents.

■

► To reset a manual requested calibration

1 Choose **Calibration** > **Status**.

2 Select the reagent and test for which the calibration request should be reset.

The selected line is highlighted in blue, the entry in the **Method** column is highlighted in green, and the corresponding button in the **Method** area is highlighted in white.

3 Select the white highlighted button in the **Method** area.

The entries in the **Method** and **Cause** column for this reagent disappear and the **Save** button turns yellow.

4 To reset further calibration requests repeat steps 2 and 3.

5 Choose **Save** to save the changes.

■

Reviewing calibration data

After a calibration is completed it should be reviewed. Details for each calibration performed on any of the analyzer's modules can be retrieved from the **Calibration** > **Status** screen. The following sections describe the possibilities to check calibration data according to the different kinds of test calibrated.

For further information, see:
Checking calibrations of photometric tests on page B-173
Checking calibrations of ISE tests on page B-177
Checking calibrations of e 601 tests on page B-178

Checking calibrations of photometric tests

For each successful calibration of a photometric test, the following information is available:

- **Calibration Factor**: Parameters that determine the position and shape of the calibration curve.
  See *Calibration factors (c 501)* on page B-180.
- **Working Information** (calibration curve): Mathematical relation between the measured signal (for example, absorbance or rate of change in absorbance) and the corresponding concentration value for the concerned analyte.
- **Reaction Monitor**: A graph showing the measured absorbance in the course of a test measurement.
- **Calibration Trace**: A graph used to review the measurements of the 50 most recent calibrations for a specific test. It shows signal values for both, the Std (1) calibrator and the calibrator with the maximum concentration on one plot.

► To review calibration data

1 Choose **Calibration** > **Status**.

2 Select a photometric test from the list on **Calibration** > **Status**.

3 Choose **Calibration Result** to display the **Calibration Result** window.

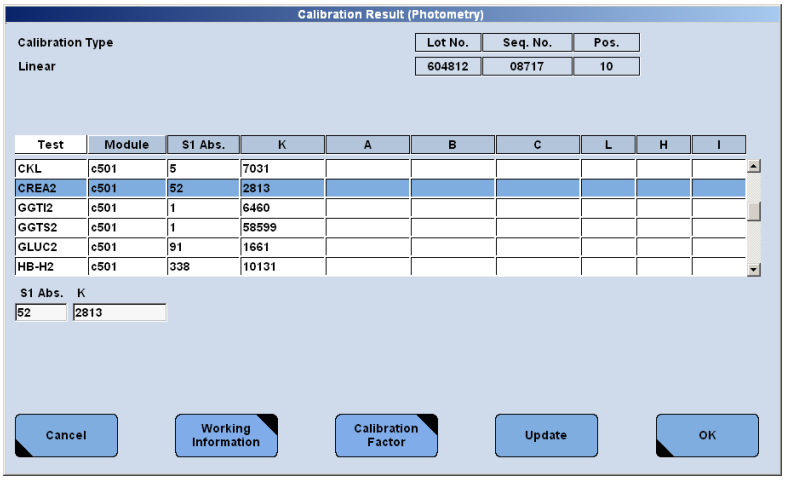

Figure B-83 Calibration Result (Photometry) window

This window gives information about the most recent calibrations for the displayed photometric test.

- To display the calibration curve of a selected test choose **Working Information**.
- To display the calibration factors for the cassette calibration, lot calibration, and currently valid calibration of a selected test choose **Calibration Factor**.

  For more details, see *Calibration factors (c 501)* on page B-180.

■

► To review measurement details of the most recent calibration (c 501)

1 Choose **Calibration** > **Status**.

2 Select a photometric test from the list on **Calibration** > **Status**.

3 Choose **Reaction Monitor** to display the **Reaction Monitor** window.

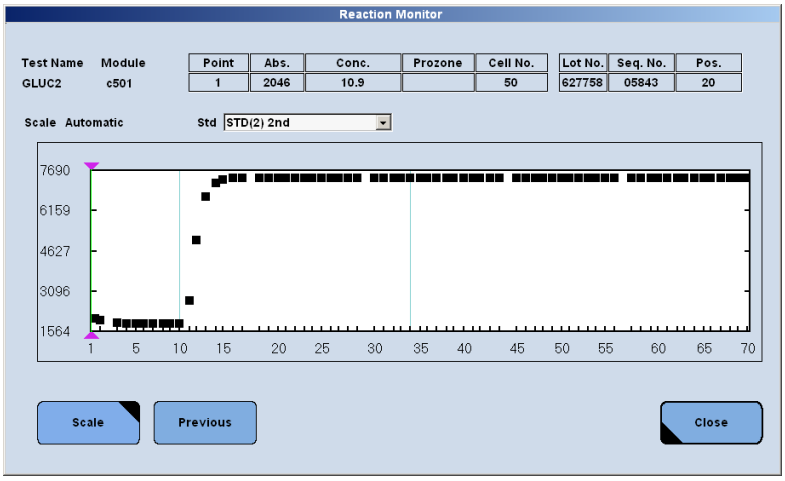

Figure B-84 Reaction Monitor window

This window displays reaction graphs for each of the duplicate measurements of each calibrator used for the calibration selected.

4 Use the drop-down list above the graph to select a specific measurement. The extensions *1st* and *2nd* in the list correspond to the first and second measurement of each calibrator, respectively.

For more information about the calibration principles, refer to *Calibration principles* in the Online Help.
For a complete description of all fields and buttons, refer to the *Online Help*.

■

Reaction monitor data of a calibration can be printed out: First, select a test from the **Calibration** > **Status** screen, then, choose **Print** (global button) > **Work Place,** select **Reaction Monitor** from the list on the left, and choose **Print**.

► To view and compare results of previous c 501 calibrations

1 Choose **Calibration** > **Status**.

2 Select a photometric test from the list on **Calibration** > **Status**.

3 In order to view and compare the results of previous calibrations of the selected test, choose **Calibration Trace**.

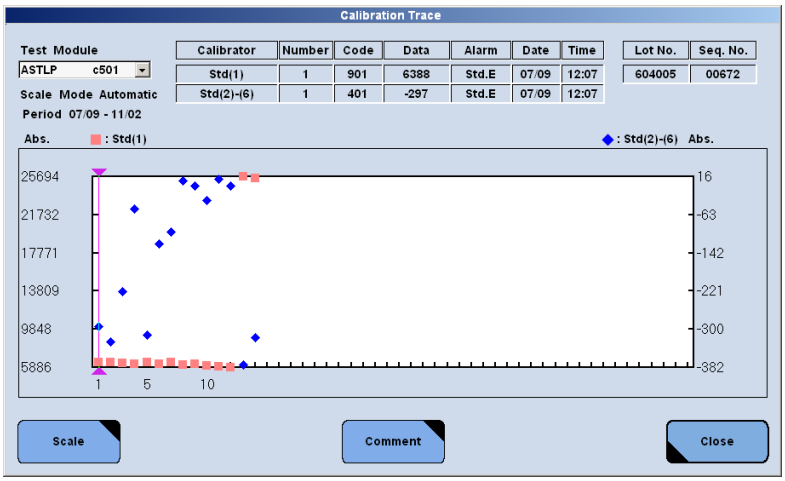

Figure B-85 Calibration Trace window

The graph shows calibration results for the selected photometric test. It displays the measured absorbance values for both the Std (1) calibrator and the calibrator with the maximum concentration Std (2)-Std (6) on one plot.

The left and right Y-axes are scaled independently:

- The left axis refers to the Std (1) calibrator represented by ■.

  In case of a rate assay, it indicates the primary wavelength absorbance at photometric measuring point 1 of Std (1).

- The right axis refers to the maximum calibrator Std (2)-Std (6) represented by ◆.

For a complete description of all fields and buttons, refer to the *Online Help*.

■

The **Comment** button is to enter a comment to this trace. However, it applies to all events, it is not event specific. This means when entering a comment specific to this enter the date and time you entered this comment.

The calibration trace can be printed out. First, select a test from the **Calibration** > **Status** screen, then, choose **Print** (global button) > **Calibration**, select **Calibration Trace** from the list on the left, and choose **Print**.

Checking calibrations of ISE tests

For each successful calibration of an ISE test, the following information is available:

- **Calibration Result (ISE)**: Results from the most recent successful ISE calibration for the test selected.
- **Calibration Trace**: A graph used to review the measurements of the 50 most recent calibrations for a specific test. It shows both the measured data for the selected test's Std 3 ISE High (in mmol/L) and slope values (in mV) on one plot.

► To review ISE calibration data

1 Choose **Calibration** > **Status**.

2 Select an ISE test from the list on **Calibration** > **Status**.

The entries ISE-A and ISE-B refer to two different calibration curves that can be assigned to different sample types. For example, ISE-A is assigned to serum/plasma and ISE-B to urine samples. This assignment is set on **Utility** > **System** (**Page 3/4**) > **ISE Calib Setting**.

3 Choose **Calibration Result** to display the **Calibration Result (ISE)** window.

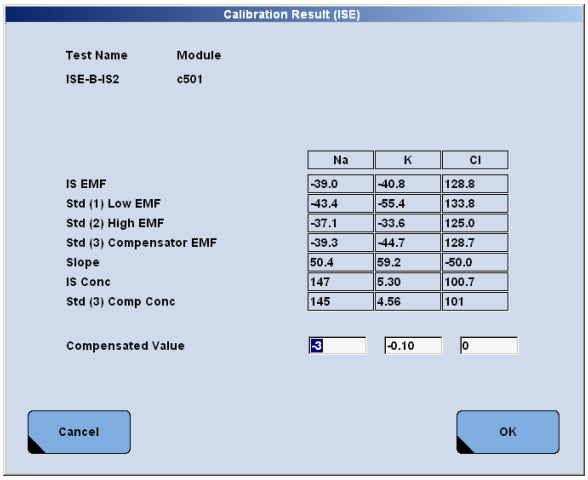

Figure B-86 Calibration Result (ISE) window

This window displays information about the most recent successful ISE calibration: electromotive force (EMF), slope, and target concentration values.

The three **Compensated Value** text boxes display the difference between the target value of ISE Std (3) (ISE High) and its measured values for Na^+, K^+, and Cl^-. This difference is added to all measured routine samples and controls.

The slope of the calibration curve is calculated from ISE Standards 1 and 2. ISE Standard 3 affects the intercept and not the slope.

■

► To review results of previous ISE calibrations

1 Choose **Calibration** > **Status**.

2 Select an ISE test from the list on **Calibration** > **Status**.

3 Choose **Calibration Trace** to open the **Calibration Trace** window.

4 Select a test from the drop-down list on the top left of the window.

The graph shows calibration results for the selected ISE test. The left and right Y-axes are scaled independently:

- The left axis refers to the measured concentration values of the ISE Standard 3 represented by ■.
- The right axis refers to the calculated slope values represented by ◆.

For a complete description of all fields and buttons, refer to the *Online Help*.

■

Checking calibrations of e 601 tests

For each successful calibration of an **e** 601 test, the following information is available:

- **Calibration Results (Immune)**: A list showing target and signal values for the selected test on the **Calibration** > **Status** screen.
- **Calibration Trace**: A graph used to review the measurements of up to 50 recent calibrations for a specific test. It shows signal values for both calibrators on one plot.

► To review e 601 calibration data

1 Choose **Calibration** > **Status**.

2 Select a **cobas e** pack and the corresponding measuring cell from the list on **Calibration** > **Status**.

3 Choose **Calibration Result** to display the **Calibration Result** window.

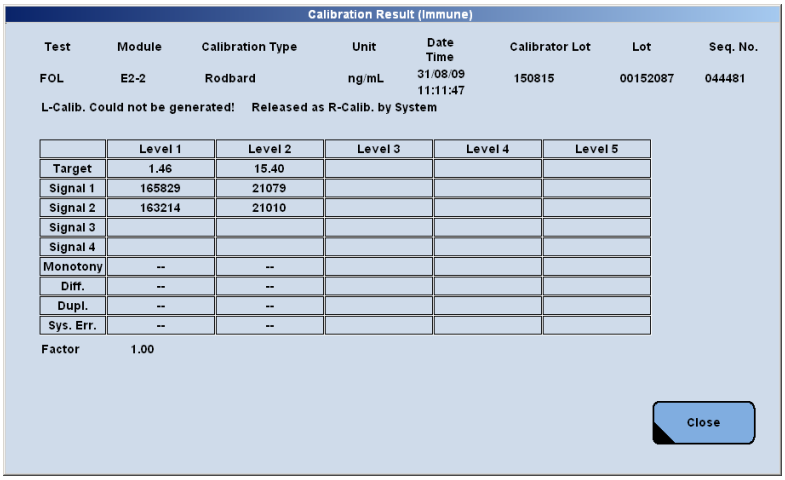

Figure B-87 Calibration Result (Immune) window

This window displays used calibration information for the selected **cobas e** pack (signal levels, calibration criteria).

■

► To view and compare results of previous e 601 calibrations

1 Choose **Calibration** > **Status**.

2 Select a **cobas e** pack and the corresponding measuring cell from the list on **Calibration** > **Status**.

3 Choose **Calibration Trace** to open the **Calibration Trace** window.

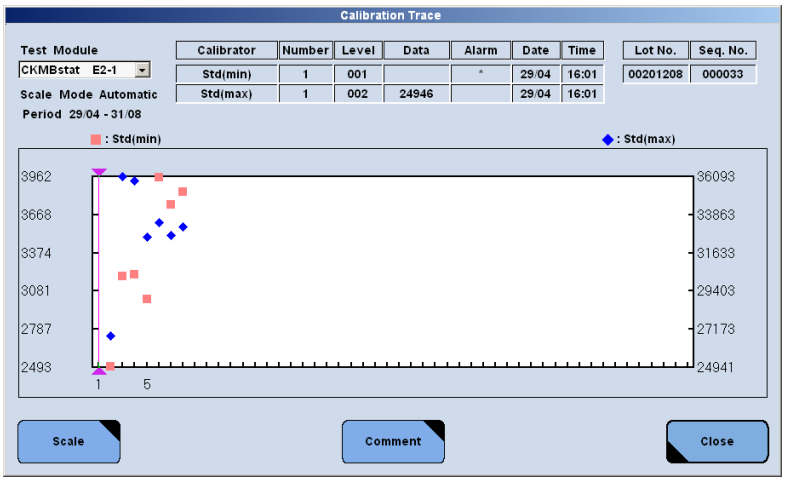

Figure B-88 Calibration Trace window for **e** 601 tests

The graph shows calibration data for the selected test and measuring cell. It displays the mean of the measured signal values for both the low concentration calibrator, Std (min), and the high concentration calibrator, Std (max), on one plot.

The left and right Y-axes are scaled independently:

- The left axis refers to the Std (min) calibrator, represented by ■.
- The right axis refers to the Std (max) calibrator, represented by ◆.

For a complete description of all fields and buttons, refer to the *Online Help*.

4 If you want to switch to the other measuring cell or another test select from the **Test Module** list box the corresponding test and measuring cell.

The list box displays the test name, the short name of the module and the measurement cell.

■

The calibration trace can be printed out. First, select a test and measuring cell from the **Calibration** > **Status** screen, then, choose **Print** (global button) > **Calibration**, select **Calibration Trace** from the list on the left, and choose **Print**.

Calibration factors (c 501)

The term calibration factors refers to coefficients (S1Abs, K, A, B, C) used for setting on calibration curves for photometric tests. The system stores calibration factors for each calibration curve of all registered reagent cassettes. The following kinds of calibration factors are available: **Cassette**, **Lot**, and **Newest**.

For more information, see *Lot and cassette calibrations for cobas c packs* on page B-165.

► To check calibration factors

1. Choose **Calibration** > **Status**.
2. Select a photometric test from the test list.
3. Choose **Calibration Result**.
4. On the **Calibration Result** window, choose **Calibration Factor**.

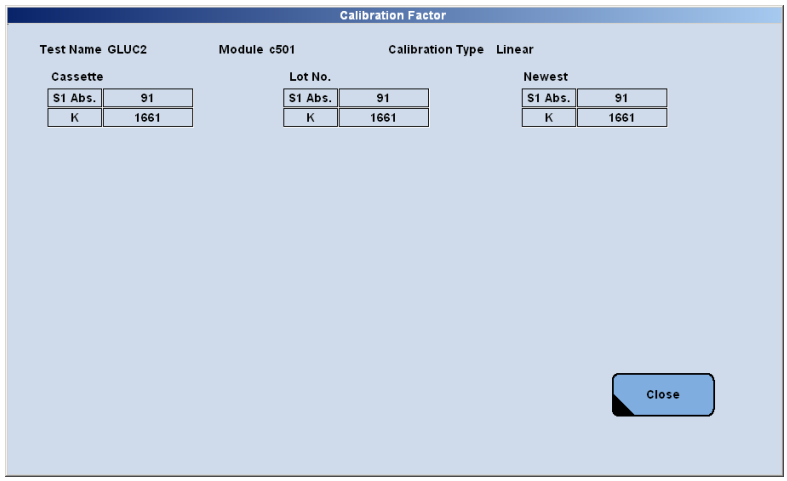

Figure B-89 Calibration Factor window (**c** 501)

The **Calibration Factor** window opens. On the **Calibration Factor** window you can see which calibration is currently used for calculating the results.

■

Cassette The factors of the selected **cobas c** pack which are used for calculating the results are displayed.

If a cassette calibration is used for calculating the results, the factors of cassette differ from the factors of the lot calibration.

If a lot calibration is used, the factors of cassette are the same as the factors of the lot calibration.

Lot No. The factors of the lot calibration are displayed.

Newest The factors used for the newest calibration is displayed. Always the last valid lot calibration is used as the newest calibration.

The newest calibration is transferred to a cassette for which no valid lot calibration exists and that has not been calibrated since loading.

Selecting tests for start-up calibrations

The start-up calibration function allows a set of tests to be calibrated at the same time:

- Tests selected for start-up calibration will be requested as soon as the **Start Up** button in **System Overview** > **Calibration and QC Select** screen is chosen.
- You can also request a start-up calibration by choosing **Calibration** > **Status** > **Start Up**: For all tests selected for start-up calibration a manual calibration request will be issued.

The set of tests that are calibrated in a start-up calibration, including the respective calibration methods, is defined on the **Start Up Setting** window.

► To select tests for start-up calibration

1 Choose **Calibration** > **Status** > **Start Up Setting**.

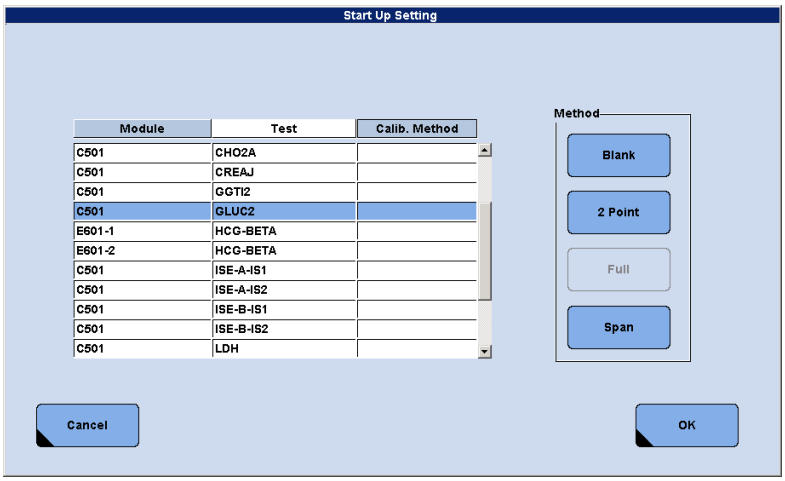

Figure B-90 Start Up Setting window

2 Choose a test in the list to select it.

3 Choose a method in the **Method** area to request it for the selected test. The **OK** button turns yellow indicating you have made a change.

- For **e** 601 tests, only **Full** is available as an option.
- For **c** 501 tests, for all non linear calibrations all methods are available. But according to the instructions for use, a full calibration must be performed.

4 Choose **OK** to save the start-up calibration settings and close the **Start Up Setting** window.

5 Choose **Start Up** on the **Calibration** > **Status** screen to activate the selected calibrations.

6 Choose **Save** to confirm the start-up calibrations.

■

Calibration Calibrator screen

The following sections explain certain tasks associated with the **Calibration** > **Calibrator** screen. Not all tasks are described, but the most important ones.

To display this screen choose **Calibration** > **Calibrator**.

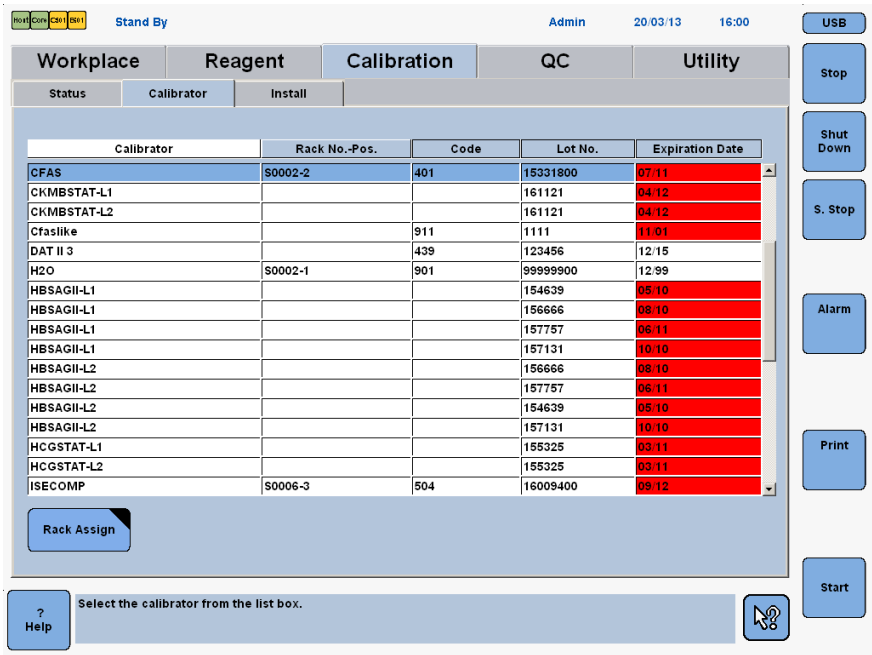

Calibrator	Rack No.-Pos.	Code	Lot No.	Expiration Date
CFAS	S0002-2	401	15331800	07/11
CKMBSTAT-L1			161121	04/12
CKMBSTAT-L2			161121	04/12
Cfaslike		911	1111	11/01
DAT II 3		439	123456	12/15
H2O	S0002-1	901	99999900	12/99
HBSAGII-L1			154639	05/10
HBSAGII-L1			156666	08/10
HBSAGII-L1			157757	06/11
HBSAGII-L1			157131	10/10
HBSAGII-L2			156666	08/10
HBSAGII-L2			157757	06/11
HBSAGII-L2			154639	05/10
HBSAGII-L2			157131	10/10
HCGSTAT-L1			155325	03/11
HCGSTAT-L2			155325	03/11
ISECOMP	S0006-3	504	16009400	09/12

Figure B-91 Calibration > Calibrator window

The **Calibration** > **Calibrator** screen is used to review information about already registered calibrators and to assign calibrators to specific racks and positions. The rack assignment is necessary for calibrators that are used without barcode identification.

For information about particular tasks associated with this screen, see:
Assigning calibrator positions on page B-182
Loading calibrator vials for e 601 tests on page B-184

For more information about the different fields and buttons on this screen, refer to the *Online Help* of the particular field or button.

Assigning calibrator positions

Use the following procedure to assign a rack number and position to a calibrator if you are using cups without a barcode, or if the system cannot read the barcode on the calibrator vial.

Do not use barcoded calibrator vials on racks that have been assigned for non-barcoded calibrator vials.

- In this case the instrument generates an alarm and no calibration is performed. The rack is passed to the output buffer.
- If you have to manually assign a calibrator vial to a calibrator rack, for example, due to an unreadable barcode, place this calibrator vial on the assigned rack in the correct position.

► To assign calibrator positions

1 Choose **Calibration** > **Calibrator** > **Rack Assignment**.

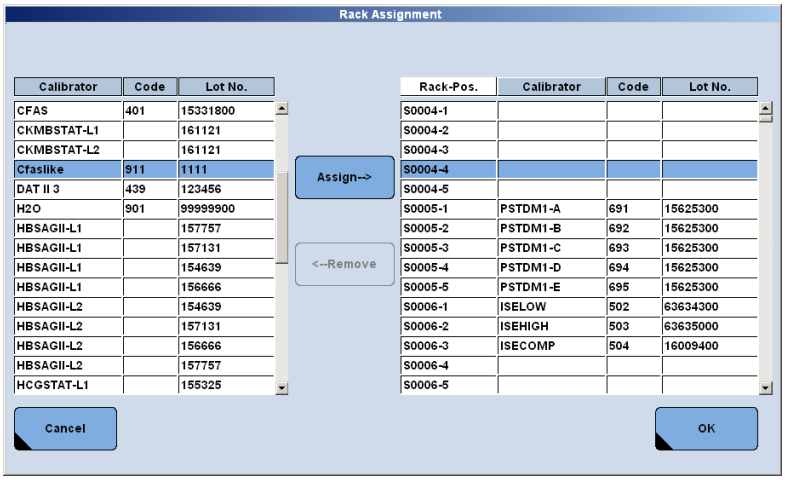

Figure B-92 Rack Assignment window

2 Select the calibrator to be assigned to a rack ID and position from the list on the left.

3 Select a rack ID and position from the list on the right:

- The position selected for the assignment has to be an empty line in the list.
- On **e** 601 modules the calibrator level 1 and level 2 must be assigned to consecutive positions on the same rack.
- On **c** 501 modules the calibrators can be on different racks.

Different designations for calibrator racks

There are following designations for the calibrator racks:

- Rack color: black
- Label on rack: C001 - C999
- Software displays: S00001 - S00999 or S0001 - S0999

4 Choose **Assign** to assign the selected calibrator to the selected position.

To undo the assignment choose **Remove** or choose **Cancel** to leave the **Rack Assignment** window without saving any changes.

5 To assign further calibrators repeat steps 2 to 4.

6 After all necessary assignments are completed, choose **OK** to save the changes.

■

Loading calibrator vials for e 601 tests

The calibrators used for the calibration of **e** 601 tests come in barcoded vials. To ensure correct pipetting from these vials it is important that they are placed correctly in the calibration racks.

- Before placing calibrators and controls on the loader, check that no bubbles or foam are visible on the liquid surface.
- Barcoded calibrator vials for **e** 601 modules can be used for a maximum of 4 calibration events.
- Calibrator vials of the same set are to be placed next to each other in the racks. Do not separate the vials of a calibration set.

► To load calibrator vials

1 Place both calibration vials of a CalSet in a black calibrator rack on consecutive positions. The order of Cal1 and Cal2 is not relevant. The picture shows an example.

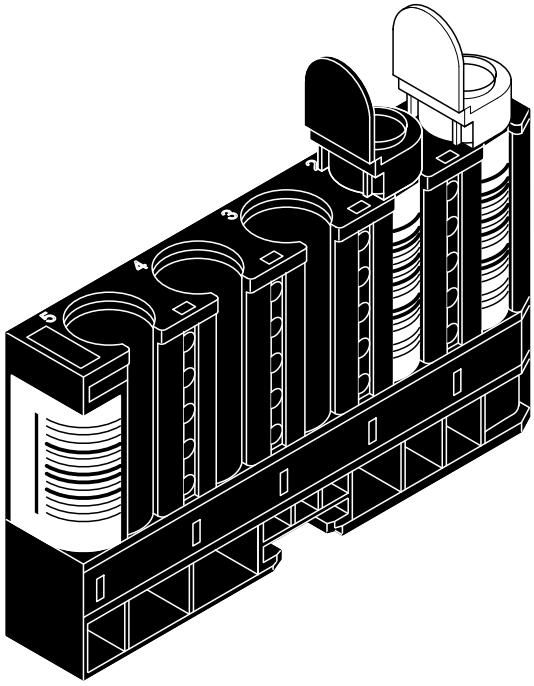

Figure B-93 Loaded vial on calibrator rack

2 Open the lid of the calibrator vials ensuring that they are on consecutive positions (see figure above).

3 Check the calibrator vials for foam and bubbles. Do not use calibrator vials containing foam or bubbles.

CAUTION! Injury due to contact with rack loader mechanism. Only load samples onto the rack loader when the green light on the rack loader is on.

4 Load the calibration rack into the loader.

■

Calibration Install screen

The following sections explain certain tasks associated with the **Calibration** > **Install** screen. Not all tasks are described, but the most important ones are discussed here.

To display this screen choose **Calibration** > **Install**.

If you want to update a calibrator of the **c** 501 module, choose the **Chemistry** tab.

If you want to update a calibrator of the **e** 601 module, choose the **Immune** tab.

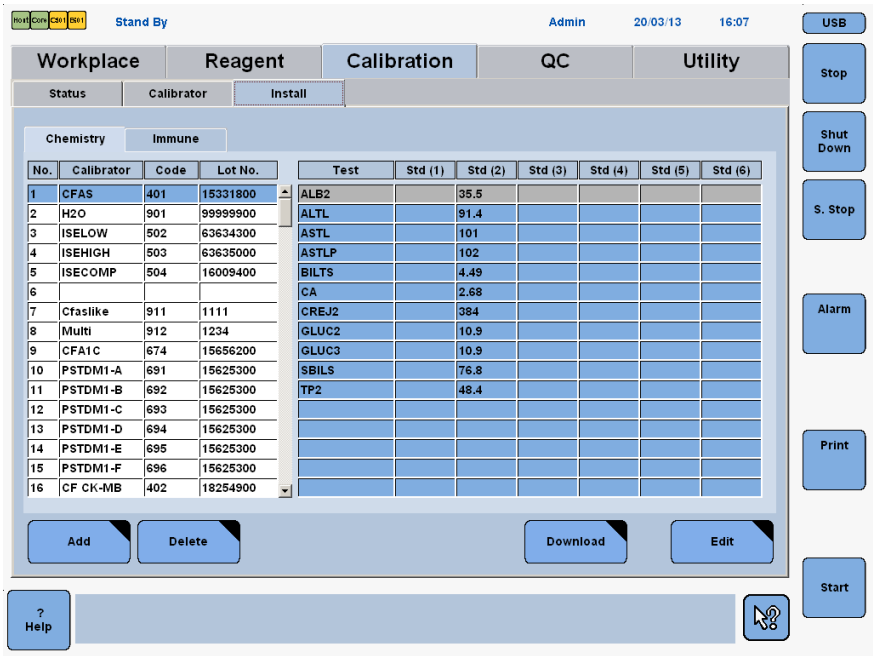

Figure B-94 Chemistry tab on Calibration > Install

The **Calibration** > **Install** screen is used to review information about already registered calibrators, to update calibrator information, and to install new calibrators.

For information about particular tasks associated with this screen, see:
Checking information about already installed calibrators on page B-186
Downloading or updating calibrator data on page B-188
Editing calibrator concentrations (c 501) on page B-193
Changing decimal places used for reportable data (c 501) on page B-195

Checking information about already installed calibrators

Information regarding calibrator codes, lot numbers, expiration dates, and calibrator concentrations can be downloaded to the system via **cobas** link.

This section describes how to check registered calibrator information.

► To check information on registered calibrators of the c 501 module

1. Choose **Calibration** > **Install** > **Chemistry**.
2. Select a calibrator from the list on the left.

   The list on the left displays the following information:

   - Calibrator name
   - Calibrator code
   - Lot number

   The list on the right displays the following information:

   - Test names
   - Registered calibrator concentrations
3. Choose **Calibration** > **Calibrator**.

   The list displays the following information:

   - Calibrator name
   - Assigned rack number and position, if available
   - Calibrator code
   - Lot number
   - Expiration date
4. Choose **Utility** > **Application** > **Other**.
5. Select a **Test** in the test list.

   The **Other** tab displays the following information:

   - Calibrator codes of the assigned calibrators
   - Normal sample volume for calibration (photometric test)
   - Volume of diluent standard dispensed for calibrator (photometric test)
   - Volume of diluent dispensed for dilution (photometric test)

■

For detailed description of the displayed information, refer to the *Online Help* of the particular windows.

► To check information on registered calibrators of the e 601 module

1 Choose **Calibration** > **Install** > **Immune**.

The list on the left displays the following information:

- Calibrator name or the test name
- Lot number

The list on the right displays the following information:

Test name

2 Choose **Calibration** > **Calibrator**.

The list displays the following information:

- Test name and calibrator level
- Assigned rack number and position, if available
- Lot number
- Expiration date

Test name ?????

If **?????** is displayed as test name (**e** 601 calibrator), the corresponding application is either not installed or it is not assigned to a module or measurement cell.

3 To find the calibrator concentrations for the **e** 601 calibrators, choose **Calibration** > **Status**.

4 Select an **e** 601 test and choose **Calibration Result**. In the calibrator result table, the line **Target** displays the calibrator concentrations.

The calibrator concentrations are displayed only in this screen and only after the calibration is completed.

■

For detailed description of the displayed information, refer to the *Online Help* of the particular windows.

Downloading or updating calibrator data

Information regarding calibrator codes, lot numbers, expiration dates, and calibrator concentrations can be downloaded to the system via **cobas** link. An operator with supervisor level or higher is required for this operation.

For instructions on entering calibration information manually, see *Editing calibrator concentrations (c 501)* on page B-193.

Downloading calibrator data is required in these situations:

- Installing an additional application

  During the installation of an application, the calibrator data for the corresponding test must be downloaded. If the new application is using a multi-analyte calibrator, the calibrator has to be re-downloaded to update the corresponding information.

- Using a new lot of a calibrator

  Calibrator data for a new lot must be downloaded. Calibrator settings, for example position assignment, are kept.

⚠ CAUTION

Incorrect results due to wrong calibration (c 501)

After changing the calibrator concentrations for any calibrator **Std (1)**-**Std (6)**, the calibration curve is immediately updated, even before the actual calibration measurement is performed.

For **Std (1)** this affects all calibration types, for **Std (2)**-**Std (6)** it affects all non-linear calibration methods (spline, line graph, RCM, RCM2T1 & RCM2T2). Therefore, in order to prevent incorrect results:

- Always recalibrate all affected tests included in the calibrator to obtain a lot calibration for the current reagent lot and for all previously registered reagents lots that will be used. In addition, all **cobas c** packs currently in use as well as temporally unloaded **cobas c** packs must be recalibrated.
- Make sure to perform the calibration measurement prior to any other determinations.

- Updating of calibrator data (**c** 501)

  Updating must be done when the calibrator concentrations of a downloaded calibrator are reassigned. If this occurs, the customers will be informed via an important note in the **cobas** e-library on **cobas** link.

  To update a calibrator the newest version of the calibrator data must be downloaded. The latest release date indicates the newest version.

  Calibrator settings, for example position assignment, are kept.

  ⚠ CAUTION

  Incorrect results due to wrong calibration (c 501)

  In order to prevent incorrect results, for all tests with reassigned calibrator concentrations a new lot calibration must be generated for the current lot and for all previously registered **cobas c** pack lots that will be used. In addition, all **cobas c** packs currently in use as well as temporally unloaded **cobas c** packs must be recalibrated.

  - Make sure to perform the calibration measurement prior to any other determinations.

For updating calibrator data, see *Download calibrator data* on page B-190.

No update of manually edited calibrator values (c 501)

In case a calibrator concentration has been manually edited, this calibrator concentration will not be updated when you download new calibrator data for an installed lot from **cobas** link. There is no indication in the software if the calibrator concentration was manually edited before.

- Check the calibrator concentrations after downloading.
- If you want to return to the original calibrator concentration, delete the calibrator and download it again from **cobas** link. Perform calibration before you resume routine operation.

No download necessary for inpack calibrators (e 601)

Calibrator data for inpack calibrators are read from the barcode of the **cobas e** pack. It is not possible to download calibrator data for inpack calibrators from **cobas** link.

See *Inpack calibrator* on page B-167.

Only one lot stored

Only one calibrator lot can be stored. Downloading a new calibrator lot overwrites the old calibrator lot. Calibrator settings, for example position assignment, are not overwritten.

For inpack calibrators (**e** 601), up to five lots can be stored.

See *Inpack calibrator* on page B-167.

Download calibrator data

How to download new or update existing calibrator data from **cobas** link is described in the following procedure.

⚠ CAUTION

Incorrect results due to wrong calibration (c 501)

After changing the calibrator concentrations for any calibrator **Std (1)**-**Std (6)**, the calibration curve is immediately updated, even before the actual calibration measurement is performed.

For **Std (1)** this affects all calibration types, for **Std (2)**-**Std (6)** it affects all non-linear calibration methods (spline, line graph, RCM, RCM2T1 & RCM2T2). Therefore, in order to prevent incorrect results:

- Always recalibrate all affected tests included in the calibrator to obtain a lot calibration for the current reagent lot and for all previously registered reagents lots that will be used. In addition, all **cobas c** packs currently in use as well as temporally unloaded **cobas c** packs must be recalibrated.
- Make sure to perform the calibration measurement prior to any other determinations.

No download for inpack calibrators (e 601)

Calibrator data for inpack calibrators are read from the barcode of the **cobas e** pack. It is not possible to download calibrator data for inpack calibrators from **cobas** link.

See *Inpack calibrator* on page B-167.

► To download calibrator data from cobas link

1 Put the analyzer in standby.

2 Choose **Calibration** > **Install** > **Download** to open the **Download** window.

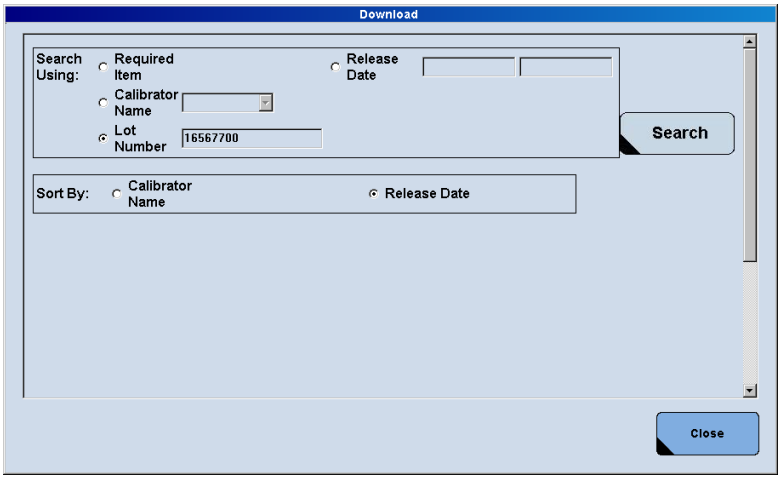

Figure B-95 Calibration download: Download window

3 Select one of the available search conditions (**Required Item**, **Calibrator Name**, **Lot Number**, or **Release Date**) in the **Search Using** area.

- **Lot Number** is the recommended search condition.

  Enter the first six digits of the lot number followed by two zeros.

- The option **Release Date** refers to the date when the calibrator was released by Roche Diagnostics.

4 Select **Release Date** in the **Sort By** area to sort the displayed search results by the release date.

5 Choose **Search**. A list of items that meet the given search conditions appears.

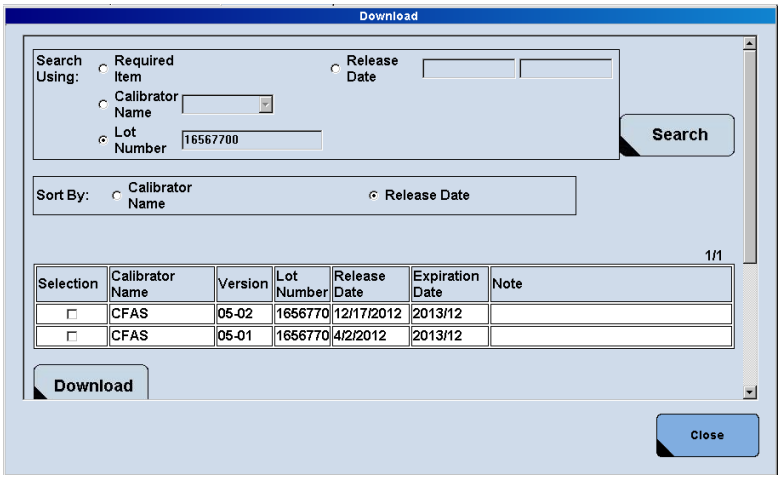

Figure B-96 Calibration download: Download window with search results

Several search results

If the **Download** window displays several search results, note the following:

- Choose **[Next >]** to display more search results.
- Use the scroll bar on the right side to display the **Download** button.

6 Select the check box of the list item to be downloaded.

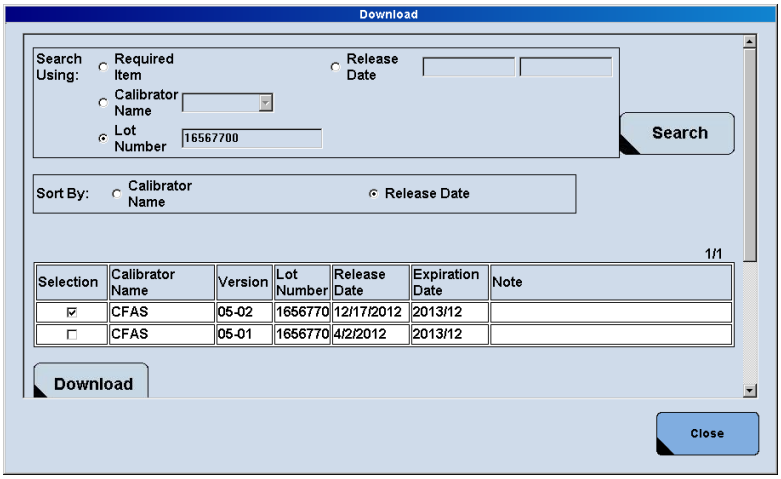

Figure B-97 Calibration download: Download window with selected item

Recommendation for download

If there are more calibrator entries for the same lot number, always download the calibrator data with the latest release date.

7 Choose **Download** and confirm with **OK**.

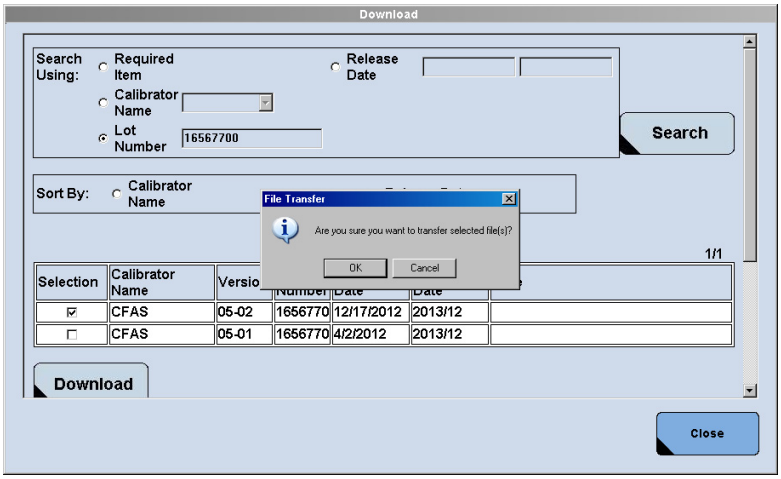

Figure B-98 Calibration download: Download and File Transfer window

8 Choose **OK** to confirm the **Confirmation** window.

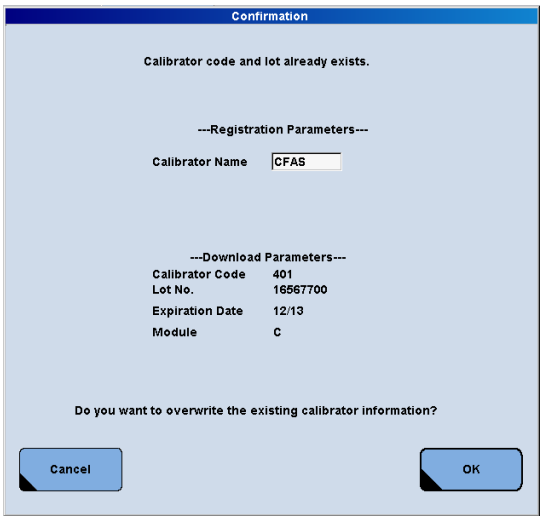

Figure B-99 Calibration download: Confirmation window

The **Confirmation** window displays the downloaded calibrator data. For **c** 501 calibrator you can edit the calibrator name.

9 Choose **Close** to return to the **Calibration** > **Install** screen and ensure the downloaded information has been registered correctly.

10 If needed, edit the decimal places for the calibrator data (**c** 501).

See *To edit decimal places used for reportable data (c 501)* on page B-196.

■

Editing calibrator concentrations (c 501)

The calibrator concentrations can be edited manually in the **Calibration** > **Install** > **Edit Calibrator** window (**c** 501 module only).

⚠ CAUTION

Incorrect results due to wrong calibration

After changing the calibrator concentrations for any calibrator **Std (1)**-**Std (6)**, the calibration curve is immediately updated, even before the actual calibration measurement is performed.

For **Std (1)** this affects all calibration types, for **Std (2)**-**Std (6)** it affects all non-linear calibration methods (spline, line graph, RCM, RCM2T1 & RCM2T2). Therefore, in order to prevent incorrect results:

- Always recalibrate all affected tests included in the calibrator to obtain a lot calibration for the current reagent lot and for all previously registered reagents lots that will be used. In addition, all **cobas c** packs currently in use as well as temporally unloaded **cobas c** packs must be recalibrated.
- Make sure to perform the calibration measurement prior to any other determinations.

No update of manually edited calibrator values (c 501)

In case a calibrator concentration has been manually edited, this calibrator concentration will not be updated when you download new calibrator data for an installed lot from **cobas** link. There is no indication in the software if the calibrator concentration was manually edited before.

- Check the calibrator concentrations after downloading.
- If you want to return to the original calibrator concentration, delete the calibrator and download it again from **cobas** link. Perform calibration before you resume routine operation.

► To edit calibrator concentrations (c 501)

1 Choose **Calibration** > **Install** > **Chemistry**.

2 Select the calibrator to be edited from the **Calibrator** list on the left.

3 Choose **Edit** to display the **Edit Calibrator** window.

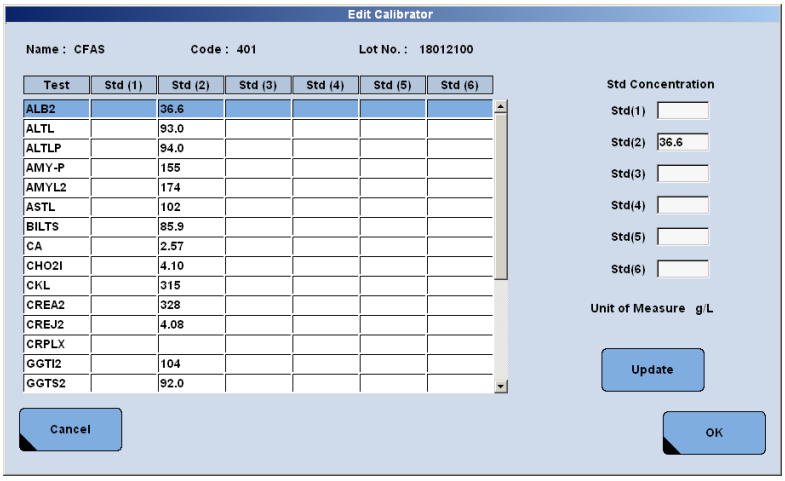

Figure B-100 Edit Calibrator window

4 Select a test from the **Test** list whose calibrator concentration is to be edited.

5 Select a text box in the **Std Concentration** area and type the appropriate concentration(s). Observe the respective **Unit of Measure** displayed below the **Std Concentration** area.

Std (1) is used for the blank calibrator. **Std (2)** through **Std (6)** are used for all other calibrators.

6 After all necessary calibrator concentrations are entered, complete the input by choosing **Update**.

7 If you need to edit additional tests, repeat steps 4 through 6.

8 Choose **OK** to save all changes.

9 Choose **Yes** to confirm the message of the confirmation window.

10 Calibrate all tests included in the edited calibrator to obtain a lot calibration for the current reagent lot and for all previously registered reagents lots that will be used.

Calibrate all **cobas c** packs currently in use and all temporally unloaded **cobas c** packs.

See *Requesting and cancelling calibrations manually* on page B-171.

■

Decimal places used for reportable data

The number of decimal places used for **Std (1)** defines the number of decimal places used for reportable data.

See *Changing decimal places used for reportable data (c 501)* on page B-195.

Changing decimal places used for reportable data (c 501)

The number of decimal places used for **Std (1)** defines the number of decimal places used for reportable data. It is recommended to edit the decimal places during the installation. However, it is possible to change the decimal places for installed tests.

⚠ CAUTION

Incorrect results due to wrong calibration

You can change the decimal places after an application has been installed. However, if the decimal places are changed after the test in question has already been calibrated, we strongly recommend deleting that test application and reinstalling it.

- After changing the decimal places always recalibrate and run controls in order to ensure no incorrect results are reported.

► To change the decimal places for an installed test (c 501)

1. Backup the database and delete patient data (**System Overview** > **Sample Data Clear** > **Backup and Clear**).

   If sample data clear is executed, all the records of the samples are deleted and QC data are moved to the **QC View**.

   For details, see *Sample Data Clear button* on page B-48.

2. Unload all the **cobas c** packs for this test (**Reagent** > **Setting** > **Cassette Unloading**).

   For details, see *Unloading reagent cassettes* on page B-132.

3. Delete the test application (**Utility** > **Application** > **Delete**).

4. Reinstall the test application (**Utility** > **Application** > **Download**).

   For details, see *Installing an application* on page B-256.

5. Load new **cobas c** packs.

   For details, see *To load a cobas c pack* on page B-53.

6. Download the calibrator data for this test under **Calibration** > **Install** > **Download**.

   For details, see *Downloading or updating calibrator data* on page B-188.

7. Change the decimal places and calibrator concentrations (**Calibration** > **Install** > **Edit**).

   For details, see:
   To edit decimal places used for reportable data (c 501) on page B-196
   To edit calibrator concentrations (c 501) on page B-194

8. Download the control data for this test under **QC** > **Install** > **Download**.

   For details, see *Downloading control data* on page B-225.

9. Calibrate the test and perform control measurements.

   For details, see *Requesting calibration and QC and printing load lists* on page B-56.

■

cobas c pack unloaded to delete the application have to be discarded, since they will not be accepted by the **c** 501 module again.

► To edit decimal places used for reportable data (c 501)

1 Choose **Calibration** > **Install** > **Chemistry**.

2 Select the calibrator to be edited from the **Calibrator** list on the left.

3 Choose **Edit** to display the **Edit Calibrator** window.

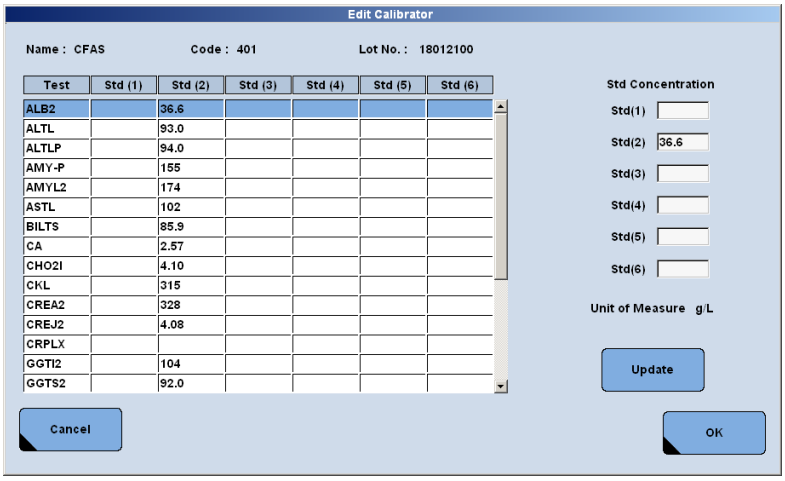

Figure B-101 Edit Calibrator window

4 Select a test from the **Test** list whose decimal places used for reportable data are to be edited.

5 Select the **Std (1)** text box in the **Std Concentration** area and add or delete decimal places.

The number of decimal places used for **Std (1)** defines the number of decimal places used for reportable data.

6 Choose **Update** to complete the input.

7 Choose **OK** to save all changes.

8 Choose **Yes** to confirm the message of the **Confirmation** window.

■

ISE calibration

ISE calibrators can be used with or without barcode. Therefore you have to download the calibrators, assign rack number and positions. Always use position 1, 2, and 3 for ISE Low, ISE High, and ISE High.

Even if your are using barcoded ISE calibrators you still have to assign the ISE calibrators to a rack. Run the barcoded ISE calibrators on a different calibration rack.

At installation of a new instrument, insert the calibrator code 502, 503 and 763 in the **Calibrator Code** text boxes on the **Utility** >**Application** > **Other** screen.

Do not use barcoded calibrators on racks that have been assigned for non-barcoded calibrators.

In this case the instrument generates an alarm and no calibration is performed. The rack is passed to the output buffer.

If the system configuration is done, use a (black) calibrator rack for the three calibrators used in an ISE calibration—ISE Low, ISE High, and ISE High—and put these in positions 1, 2, and 3 respectively according to the rack assignment.

For details, see *Editing calibrator concentrations (c 501)* on page B-193.

Sample type specific ISE calibration curves

For ISE tests it is possible to apply one of two independent calibration curves. After installation and assignment, the respective calibrator concentrations are displayed under **Type A** and **Type B** on **Utility** > **Application** > **Other**.

The assignment of one or the other calibration curve to a certain sample type is set on **Utility** > **System** (**Page 2/4**) > **ISE Calib Setting**.

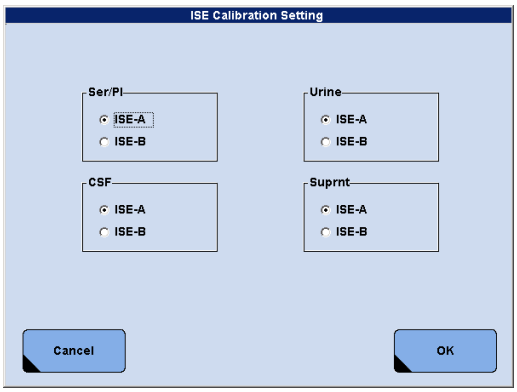

Figure B-102 Utility > System (Page 2/4) > ISE Calib Setting window

For more information, see *Setting up individual calibration curves for each ISE sample type* on page B-280.

System Overview screen

The following section explains calibration tasks associated with the **System Overview** screen.

Choose the graphical icon representing the configuration in the status line (top left of the screen), or press <F12> to display the **System Overview** screen.

Calibrating tests during operation

Calibration is usually performed at the beginning of routine operation before sample processing begins. However, it can be done anytime during routine operation as well.

The procedure for calibrating tests during operation is essentially the same as the calibration at the beginning of routine operation:

► **To perform calibrations during operation**

1. Request the recommended calibrations via the **Calibration and QC Selection** button (highlighted yellow) on the **System Overview** screen.
2. Print the **Load List**.
3. Prepare the calibrator(s).
4. Place the calibrator rack(s) on the loader.
5. Start the calibration measurement.

   For detailed description of the calibration process at the beginning of routine operation, see *Calibration and QC Select button* on page B-55.

■

QC

This chapter provides descriptions of the basic QC concepts as well as of special tasks that are not usually part of the daily workflow. It is meant to complement the chapter Daily operation, where everyday tasks and common procedures for running the **cobas** 6000 analyzer series are described.

In this chapter

Chapter **12**

QC concept B-201
QC methods B-201
System implementations for QC measurements B-202
Accumulation methods for QC measurement data B-203
QC data base management B-204
Working in barcode or non-barcode mode B-205
Overview B-206
QC Status screen B-206
Timeout QC B-208
Requesting QC measurements B-209
QC after calibration B-210
QC Run Status screen B-211
QC Individual screen B-213
Excluding an individual QC point or adding a comment B-215
Configuring and using realtime QC B-216
Configuring realtime QC B-219
Accumulation of QC results B-219
System settings for QC accumulation B-220
Accumulating QC results B-220
QC Cumulative screen B-221
QC Control screen B-222
QC Install screen B-224
Downloading control data B-225
Editing control values B-228
Updating of control values B-229
Activating control tests B-231
Automatic QC measurement B-232
Configuring automatic QC measurement B-232
Unloading auto QC racks from the rack rotor B-233

QC concept

Regularly perform QC measurements to continually monitor the instrument performance. After measurement of QC samples, data can either be transferred to and evaluated on a Host or they can be evaluated on the system.

QC methods

The following QC methods are available on a **cobas** 6000 system: Individual (intra-day) QC, cumulative (long-term) QC, and realtime QC.

Individual and cumulative QC

All results of QC measurements can be viewed on the **QC** > **Run Status** screen and the **QC** > **Individual** screen. It is recommended to transfer QC data at the end of a day from the individual QC to the cumulative QC. Under cumulative QC you find all the long-term quality control information stored on the system.

For more information, see:
Accumulation methods for QC measurement data on page B-203
Accumulation of QC results on page B-219
QC Run Status screen on page B-211
QC Individual screen on page B-213
QC Cumulative screen on page B-221

Realtime QC

Independent of individual and cumulative QC, the realtime QC function allows the evaluation of QC measurement immediately after their results become available (realtime) utilizing the Westgard algorithm.

Realtime QC for one test always uses two kinds of controls and compares QC results against the controls' known standard deviation (SD) and mean values.

For more information on realtime QC, see *Configuring and using realtime QC* on page B-216.

System implementations for QC measurements

In addition to the QC *methods* explained above, there are six *types* of implementations which are available to manage the measurement of QC samples:

- Routine QC
- Stand by reagent QC
- Timeout QC
- Automatic QC
- QC after calibration
- Manual QC

Routine QC

Each test has one or more controls assigned to it. Moreover, a test must be not only *assigned* to a control but also *activated* for that control to make a QC measurement possible. Routine QC contains all activated tests of all installed controls. You can request a QC measurement for all of these tests—for example, at the beginning of a work shift—with one single command (**System Overview** > **Calibration and QC Select** > **Routine QC**).

For more information about routine QC, see:
Requesting QC measurements on page B-209
To perform controls for active reagents on page B-209

Stand by reagent QC

QC measurements can be requested individually for stand by reagents. Stand by reagents are **cobas c** packs and **cobas e** packs already on board but not in use at present.

For more information about stand by reagent QC, see:
Requesting QC measurements on page B-209
To perform controls for standby reagents on page B-210

Timeout QC

QC measurements can be performed at predefined (test-specific) time intervals. When the time interval has elapsed, the system issues a recommendation for a QC measurement. This is indicated by the **Calibration and QC Select** button on the **System Overview** screen lighting up in yellow. In case an automatic QC rack is in the auto QC position in the rack rotor, this rack is transferred to the sample line and measurements are performed fully automatically.

See *Timeout QC* on page B-208.

Automatic QC

It is possible to keep frequently used controls in the rack rotor—ready to be used any time before or during routine operation. Thus, in combination with Timeout QC, the system is able to perform QC measurements without any intervention by the operator.

See *Automatic QC measurement* on page B-232.

QC after calibration

For this kind of QC measurements no special settings are needed. Whenever a calibrator rack(s) (black rack) is immediately followed by a QC rack (white rack), QC measurements are performed for all calibrated tests without explicit requests from the operator if the corresponding test is activated for that control.

If you use *QC after calibration*, the QC results are always calculated with this new calibration curve.

For performing QC after calibration, see *QC after calibration* on page B-210.

Manual QC

This function allows to measure QCs of any activated test for the corresponding control whenever needed.

See *Requesting QC measurements* on page B-209.

Accumulation methods for QC measurement data

At the end of daily operation, QC measurement data should be accumulated. When accumulating QC results, the corresponding data are deleted from the **QC** > **Individual** screen and transferred to the **QC** > **Cumulative** screen.

Two accumulation methods

There are two accumulation methods available: **Mean-R** and **X-R**. The choice for one or the other method is made under **Utility** > **System** (**Page 1/4**) > **QC Setting**.

- **X-R** transfers only **one** QC result from individual QC to cumulative QC. Therefore you must specify a result when accumulating QC data.
- **Mean-R** calculates a mean of the data to be accumulated. This mean is then transferred to the cumulative QC data.

Two calculation methods

If **Mean-R** is set as accumulation method, two methods are available for the calculation of mean values and SD values in cumulative QC: **DayToDay** and **Overall**.

- The **Overall** method uses a weighting factor for each accumulated set of data.
- In the **DayToDay** calculation method all accumulations have the same weight.

The calculation method is selected under **Utility** > **System** (**Page 1/4**) > **QC Setting**.

For more information on the different calculations of mean and SD values according to the DayToDay or Overall method, see *Accumulation of QC results* on page B-219.

QC data base management

The following chart shows the handling of QC results starting with the measurement of QC samples and ending with the deletion of QC results. It shows the different screens that display QC results, and shows the particular action that moves (deletes, accumulates) the results from one screen to another screen.

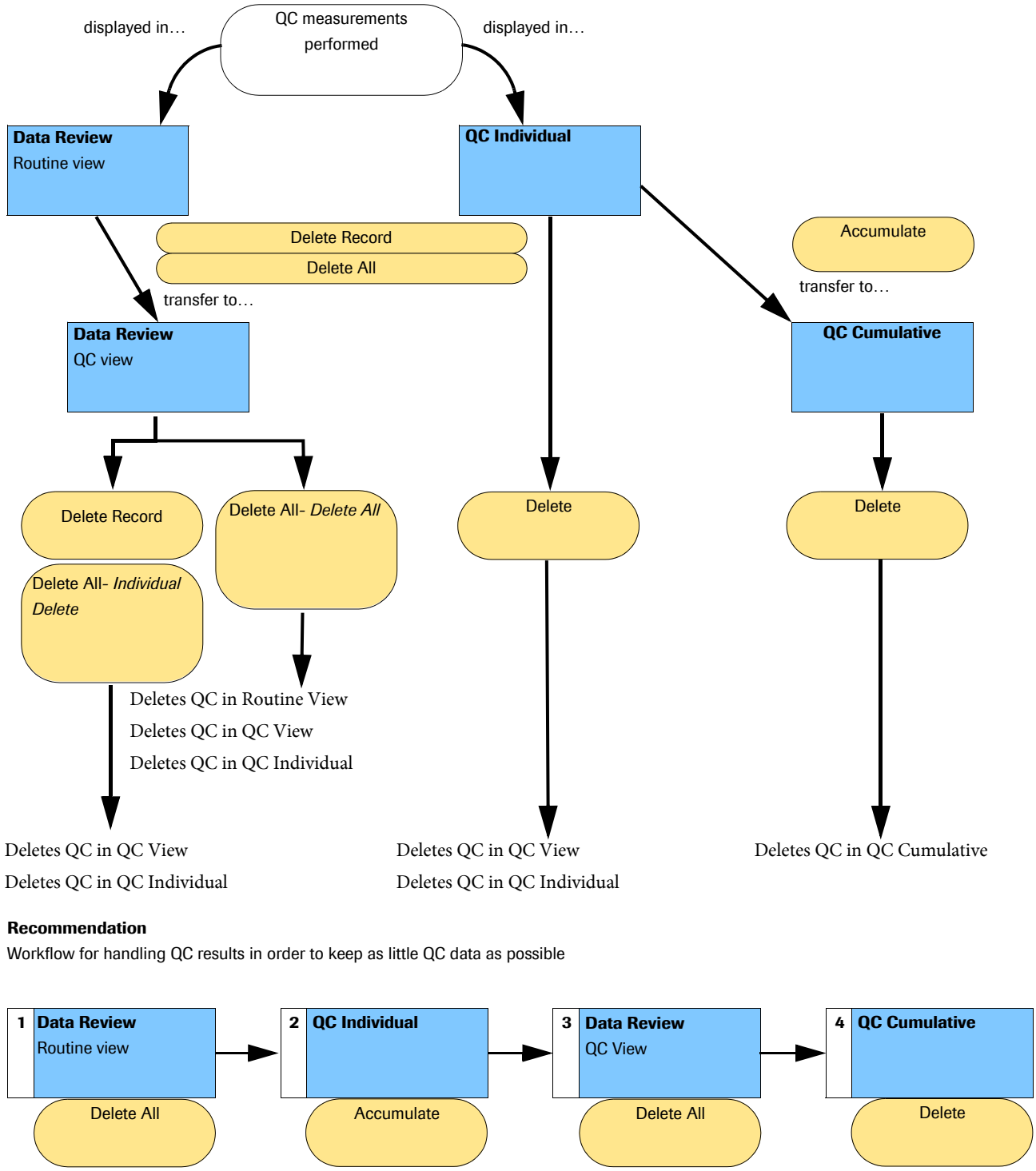

Recommendation

Workflow for handling QC results in order to keep as little QC data as possible

Figure B-103 Workflow for handling QC results

Summary **QC View** is linked with the QC individual database. If a QC result is deleted in the **QC View** database, it is as well deleted in the QC individual database and vice versa. Therefore it is recommended to first accumulate individual QC results before deleting QC data on **Data Review** > **QC View**.

QC data of the QC cumulative database should only be deleted, if the particular data is no longer required.

Deleting a control deletes all corresponding QC data

If you delete a control on the **QC** > **Install** screen, you also delete all corresponding QC data:

- QC > Individual
- QC > Cumulative
- QC > Run Status
- Workplace > Data Review > Routine View
- Workplace > Data Review > QC View

Working in barcode or non-barcode mode

On the **Utility** > **System** screen under **Barcode Setting**, you can verify or change whether the system uses barcodes for controls or not.

When working with barcodes, controls are automatically identified. In case controls are processed in non-barcode mode, it is necessary to assign a rack number and rack position for each control.

The current rack assignment is listed on the **QC** > **Control** screen. To provide additional assignments or remove existing assignments choose **Rack Assignment**.

- For assigned controls (without barcode), be sure to use the specified racks and positions. Misplacement would go undetected by the system and yield completely invalid results.
- Do not use barcoded controls on a QC rack that is assigned for non-barcoded controls.

For more information, see *QC Control screen* on page B-222.

Overview

The QC menu contains six screens: **QC** > **Status**, **QC** > **Run status**, and **QC** > **Individual, QC > Cumulative, QC > Control, QC > Install**. This chapter describes important commands accessed via these screens as well as various information displayed on them.

However, this chapter does not cover all possible commands. For a complete description of all fields of the software's user interface, refer to the *Online Help*.

For more information about the calibration menu, refer to the *Online Help*.

QC Status screen

The following sections explain certain tasks associated with the **QC** > **Status** screen. Not all tasks are described, but the most important ones are discussed here.

To display this screen choose **QC** > **Status**.

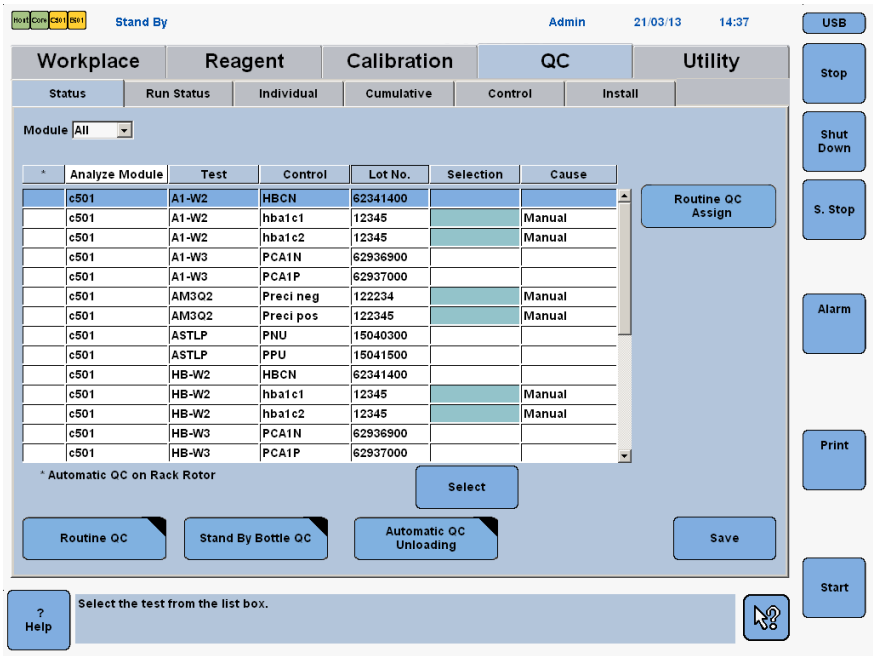

Figure B-104 QC > Status screen

The **QC** > **Status** screen displays all installed controls with the corresponding assigned and activated tests for each module and measuring cell.

The test display can be sorted by module, test name (alphabetical order), control name (alphabetical order), QC test selection, or QC cause. Tests can be selected with the **Select/Deselect** button. Selected tests are highlighted in green. A control test selection is made for the subsequent control run. The control test selections of the status list are reset after the control is measured.

Only the test selection of pipetted control tests are reset. If a test is requested but the control vial is not inserted, the QC request remains.

An asterisk (*) in the first column of the **QC** > **Status** screen denotes which control is used as automatic QC.

For more information, see *Automatic QC measurement* on page B-232.

Routine QC Assign

The **Routine QC Assign** button selects all Routine QC tests (current reagents only) for a control measurement. Routine QC tests are all activated tests for all installed controls. Tests that are not to be measured can be deselected on the **Status** screen: Highlight the concerned line(s) on the status list and then use the green **Deselect** button.

For more information, see *To perform controls for active reagents* on page B-209.

Direct access from System Overview screen

From the **System Overview** screen, select the **Calibration and QC Select** button and then the **Routine QC** button in the **QC** area on the right. This is the same as selecting the **Routine QC Assign** button on **QC** > **Status**.

For more information, see *To request calibration and QC* on page B-57.

Automatic QC Unloading

Use this button to unload auto QC racks from the rack rotor. In the **Automatic QC Unloading** window select the rack(s) to be unloaded and choose **Select**. Then choose **Execute**.

For more information, see *Automatic QC measurement* on page B-232.

For more information about the different fields and buttons on this screen, refer to the *Online Help* of the particular field or button.

Timeout QC

A control interval in hours can be defined for each application on the **Range** tab on **Utility** > **Application**. Select the **Control Interval Time** check box and type the appropriate time in the adjacent text box.

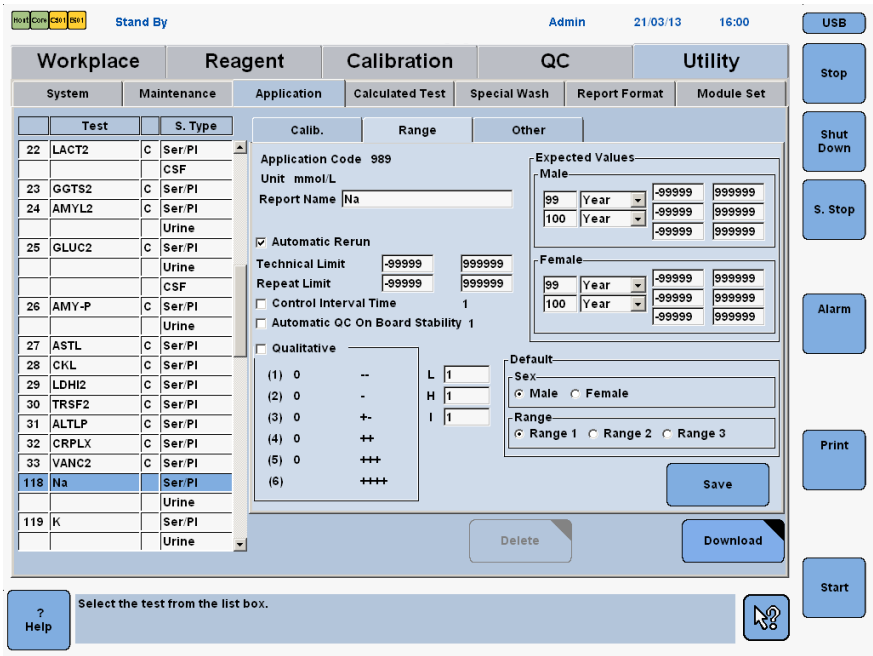

Figure B-105 Range tab on Utility > Application

The system checks the timeout every 30 minutes. When the specified time has elapsed, a QC request is triggered. This QC request is indicated on the **QC** > **Status** screen by the word *Timeout* in the **Cause** column.

If there is an auto QC rack in the rack rotor with a suitable control, the system performs an automatic QC.

The control is measured with the active (in use) **cobas c** pack or **cobas e** pack.

Requesting QC measurements

QC measurements can be requested individually for active and standby reagents. Active reagents are **cobas c** packs and **cobas e** packs currently in use. Standby reagents are **cobas c** packs and **cobas e** packs already on board but not in use at present.

- Do not use expired controls on **c** 501 and **e** 601 modules. The instrument issues no alarm when using expired controls.

Whether controls are expired can be checked in *QC Control screen* on page B-222.

- Do not use barcoded control vials on the same rack as assigned for non-barcoded control vials.

For more information about requesting QC manually, see:
Requesting calibration and QC and printing load lists on page B-56
To perform controls for active reagents on page B-209
To perform controls for standby reagents on page B-210
QC after calibration on page B-210

► To perform controls for active reagents

1. On **QC** > **Status** select the module where the QC is to be performed from the **Module** box.
2. If routine QC is to be performed, choose **Routine QC** to select all tests that are currently loaded on the system and activated for QC.

   If individual tests are to be selected, go to step 3.
3. Choose the appropriate test, control and measuring channel, if applicable. Multiple tests, controls and measuring channels can be highlighted.
4. Choose **Select**. A green bar appears in the **Selection** column. **Manual** is displayed in the **Cause** column.

   The **Select** button toggles to **Deselect**.
5. Choose **Save** to request the selected controls for measurement.
6. **Print** a **QC Load List** and load controls onto the system.
   - Choose **Print** (global button) > **QC** and select **QC Load List**.
   - Choose **Print**. The System prints a **QC Load List**.

   CAUTION! Injury due to contact with rack loader mechanism. Only load controls onto the rack loader when the green light on the rack loader is on.
   - Place the controls in white racks and load them onto the loader.

You can also print a **QC Load List** from **System Overview** > **Calibration and QC Select**. Select the **QC Only** option in the **Load List** area and choose **Print**.

■

Routine QC does not include QC measurement for standby reagents. To perform controls for standby reagents, QC measurement has to be requested separately.

► To perform controls for standby reagents

- **Stand By Bottle QC** can only be requested in **Stand By**, **Rack Supply Complete**, or **Rack Collect End**.
- Additional steps may be necessary if your **cobas** 6000 system is connected to a preanalytical system.

1 On **QC** > **Status** choose **Stand By Bottle QC** to display the **Stand By Bottle QC** window.

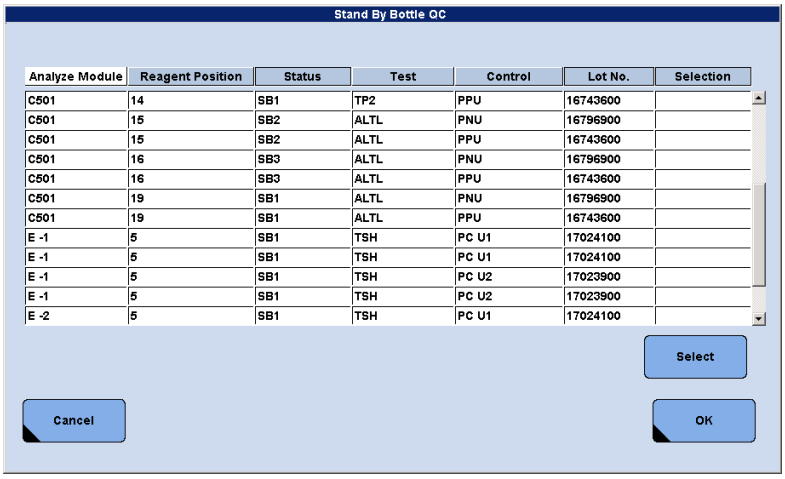

Analyze Module	Reagent Position	Status	Test	Control	Lot No.	Selection
C501	14	SB1	TP2	PPU	16743600	
C501	15	SB2	ALTL	PNU	16796900	
C501	15	SB2	ALTL	PPU	16743600	
C501	16	SB3	ALTL	PNU	16796900	
C501	16	SB3	ALTL	PPU	16743600	
C501	19	SB1	ALTL	PNU	16796900	
C501	19	SB1	ALTL	PPU	16743600	
E -1	5	SB1	TSH	PC U1	17024100	
E -1	5	SB1	TSH	PC U1	17024100	
E -1	5	SB1	TSH	PC U2	17023900	
E -1	5	SB1	TSH	PC U2	17023900	
E -2	5	SB1	TSH	PC U1	17024100	

Figure B-106 Stand By Bottle QC window

2 Select the appropriate test, control, and measuring channel if applicable. Multiple tests, controls, and measuring channels can be highlighted.

3 Choose **Select**. A green bar appears in the **Selection** column.

The **Select** button toggles to **Deselect**.

4 Choose **OK** to request the selected controls for measurement.

5 Print a **QC Load List** and load controls onto the system.

■

QC after calibration

A calibration request automatically triggers a QC request for that reagent (current and standby reagents). A QC rack has to directly follow the calibrator rack.

If you are using calibrators on more than one rack, place all calibrator racks before the QC racks.

For more information about QC after calibration, see *QC after calibration* on page B-203.

QC Run Status screen

To display this screen choose **QC** > **Run Status.**

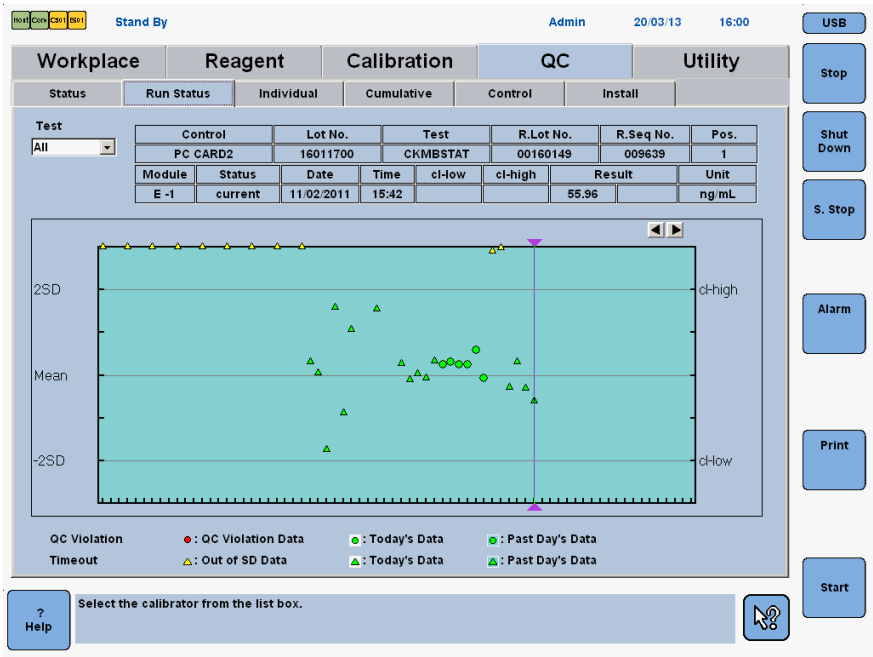

Figure B-107 QC > Run Status screen

Use the **Run Status** screen to get an overview of the last 500 quality control (QC) measurements performed on the analyzer or to view the most recent QC measurements for one particular test.

Use the **Test** box to select all tests or one specific test to be displayed on the chart. Use the arrows at the top right of the chart to move the focus from one result to the next.

For more information about the different fields and buttons on this screen, refer to the *Online Help* of the particular field or button.

QC run status details

The **Run Status** screen consists of a details area in the upper part of the screen and a run status chart in the center of the screen. The details area displays information that relates to the QC measurement selected on the run status chart. The chart in the center of the **Run Status** screen displays up to 500 results of QC measurements.

Chart background

A white background refers to today's measurements. A green background refers to past days' measurements.

Chart symbols

Shape: Circles are used when **QC Violation** is activated; otherwise triangles are used.

For more information on **QC Violation**, see *QC-triggered calibration (QC Violation)* on page B-161.

Color: Red and yellow denote a QC result falls out of confidence limits or 2 SD limits, respectively. Green symbols are used for results within the relevant limits.

●	Displayed if QC violation is activated	QC result exceeds confidence limit (right axis of chart). A calibration is automatically recommended for the affected test.
●	Displayed if QC violation is activated	QC result within confidence limits
△	Displayed if QC violation is not activated and confidence limits are not checked	QC result falls outside ± 2 SD (left axis of chart)
▲	Displayed if QC violation is not activated	QC result within ± 2 SD

Special fields in the details area

Status: This field displays a reagent's status of precedence. Possible values are **Current**, **SB1**, **SB2**, **SB3**…

Current	Reagent (that is, **cobas c** pack or **cobas e** pack) currently in use
SB1	(Standby reagent 1) The reagent which will be used after the current reagent
SB2	(Standby reagent 2) The reagent which will be used after SB1 reagent

cl-low / cl-high: These fields display the confidence limits specified for the selected test. If the selected test is not configured for QC violation but for timeout calibration, the fields under **cl-low** and **cl-high** are blank.

QC Individual screen

The following sections explain certain tasks associated with the **QC** > **Individual** screen. Not all tasks are described, but the most important ones are discussed here.

To display this screen choose **QC** > **Individual.**

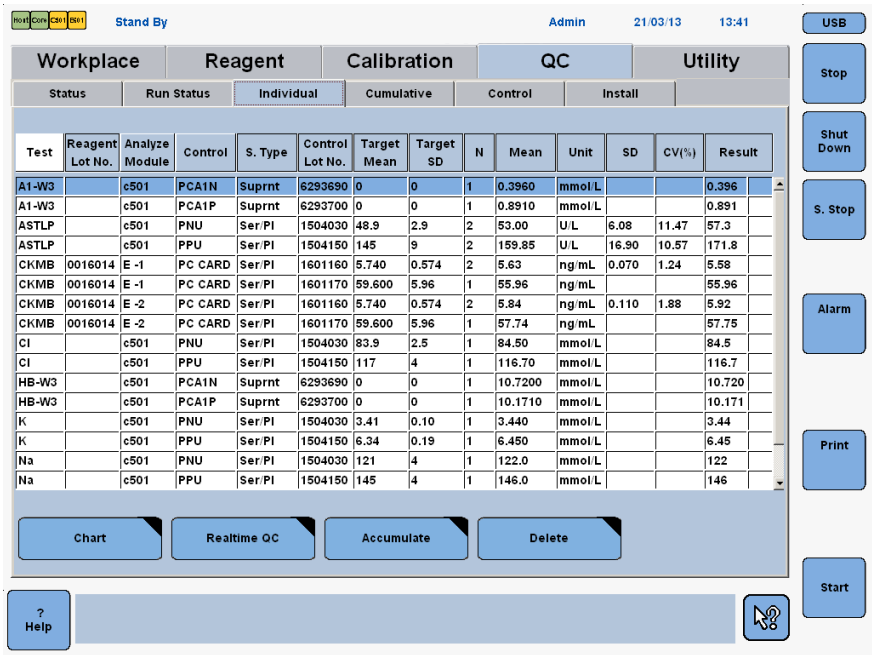

Test	Reagent Lot No.	Analyze Module	Control	S. Type	Control Lot No.	Target Mean	Target SD	N	Mean	Unit	SD	CV(%)	Result
A1-W3		c501	PCA1N	Suprnt	6293690	0	0	1	0.3960	mmol/L			0.396
A1-W3		c501	PCA1P	Suprnt	6293700	0	0	1	0.8910	mmol/L			0.891
ASTLP		c501	PNU	Ser/Pl	1504030	48.9	2.9	2	53.00	U/L	6.08	11.47	57.3
ASTLP		c501	PPU	Ser/Pl	1504150	145	9	2	159.85	U/L	16.90	10.57	171.8
CKMB	0016014	E -1	PC CARD	Ser/Pl	1601160	5.740	0.574	2	5.63	ng/mL	0.070	1.24	5.58
CKMB	0016014	E -1	PC CARD	Ser/Pl	1601170	59.600	5.96	1	55.96	ng/mL			55.96
CKMB	0016014	E -2	PC CARD	Ser/Pl	1601160	5.740	0.574	2	5.84	ng/mL	0.110	1.88	5.92
CKMB	0016014	E -2	PC CARD	Ser/Pl	1601170	59.600	5.96	1	57.74	ng/mL			57.75
Cl		c501	PNU	Ser/Pl	1504030	83.9	2.5	1	84.50	mmol/L			84.5
Cl		c501	PPU	Ser/Pl	1504150	117	4	1	116.70	mmol/L			116.7
HB-W3		c501	PCA1N	Suprnt	6293690	0	0	1	10.7200	mmol/L			10.720
HB-W3		c501	PCA1P	Suprnt	6293700	0	0	1	10.1710	mmol/L			10.171
K		c501	PNU	Ser/Pl	1504030	3.41	0.10	1	3.440	mmol/L			3.44
K		c501	PPU	Ser/Pl	1504150	6.34	0.19	1	6.450	mmol/L			6.45
Na		c501	PNU	Ser/Pl	1504030	121	4	1	122.0	mmol/L			122
Na		c501	PPU	Ser/Pl	1504150	145	4	1	146.0	mmol/L			146

Figure B-108 QC > Individual screen

The **QC** > **Individual** screen lists all non-accumulated QC results.

For more information about the different fields and buttons on this screen, refer to the *Online Help* of the particular field or button.

The list can be sorted by test name, module, and control name. The table below explains the most important columns of the list.

Reagent Lot No.	**cobas e** pack number (for **e** 601)
Control	Name of the control
Control Lot No.	Lot number of control material
Target Mean	Control target mean
Target SD	Control target standard deviation
N	Number of QC runs carried out on this control since the last accumulation
Mean	Calculated mean of N measurement results
SD	Standard deviation calculated from N control measurements
CV [%]	Coefficient of variation calculated from the mean value
Result	Most recent QC result of this control

For information about particular tasks associated with this screen, see *Excluding an individual QC point or adding a comment* on page B-215.

On the **QC** > **Individual** screen, choose **Chart** to open the **Individual QC Chart** window.

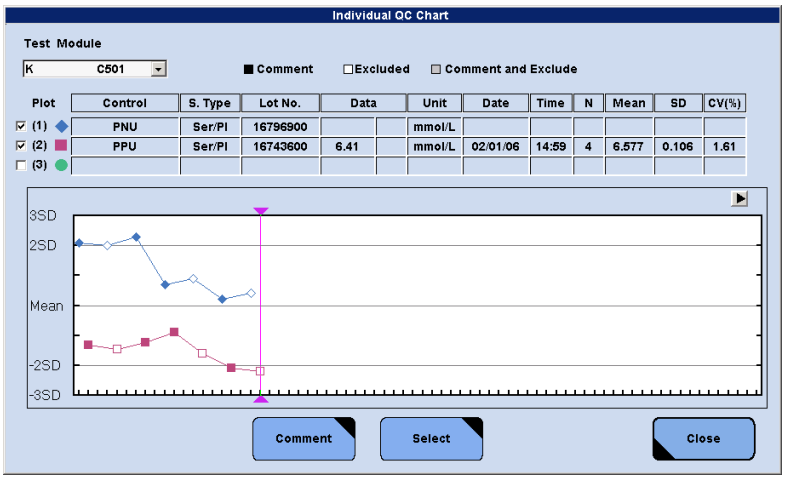

Figure B-109 Individual QC Chart window

This window displays all non-accumulated QC results for the selected test in a Levey-Jennings chart. A Levey-Jennings chart provides a visual method of monitoring trends in QC results. The result values are scaled to the standard deviation (SD) of the respective test.

Up to three controls for one test can be selected (**Select** button) and displayed on one chart.

If for one test different sample types are defined (**S. Type**), for example serum and urine, then the corresponding control within the QC chart must be selected, based on the sample type.

Excluding an individual QC point or adding a comment

Individual QC points on a QC chart can be excluded from QC calculations if required. It is also possible to annotate individual QC points.

► To exclude an individual QC point and add a comment

1. Choose **QC** > **Individual** > **Chart**.
2. Select the QC point to be excluded from QC calculations.
3. Choose **Comment** on the **Individual QC Chart** window to display the **Comment** window.
4. If necessary type a comment (max. 20 characters) in the **Comment** box.
5. Choose **Exclude**. The window is closed after confirmation.

   This removes the point from statistics but continues to display the information on the chart.

■	A comment is attached to this point
□	This point is excluded Also results from a standby **cobas c** pack/**cobas e** pack are shown as excluded without a comment.
■	This point is excluded and a comment is attached

If you delete a comment, the chart point remains black.

   Excluded points cannot be included later.

6. Choose **OK**.

■

Configuring and using realtime QC

In realtime QC the system uses the Westgard algorithm to evaluate QC measurements. The Westgard algorithm is based on a multi-rule Shewhart-type method and applies a set of rules to each QC. These rules are selected from **QC** > **Individual** > **Realtime QC** > **Select Rules** for each test.

Quality control by the Shewhart method

The instrument measures two control samples (X and Y) in pairs, whose mean value ($\bar{X}$) and standard deviation (SD) are known for each test. Each QC result is processed according to the judgment standard (multi-rule) and it is judged whether it can be reported or not.—When the algorithm yields an error, an alarm is generated indicating whether the error is random error, QC error, or systematic error.

The kinds of realtime QC samples are 100 at a maximum. Figure B-110 shows an illustration of the multi-rule chart.

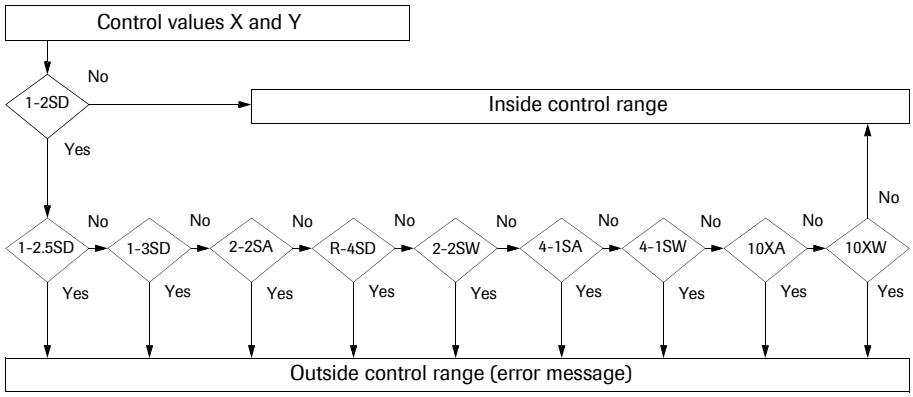

Figure B-110 Application of multi-rule Shewhart-type method in realtime QC

Configuration of realtime QC

Configure realtime QC in **Realtime QC** window (**QC** > **Individual** > **Realtime QC**): Choose **Select** to specify control (X) and control (Y) for each relevant test. Then, choose **Rules** to select the rules.

Only QC results of currently used **cobas c** packs and **cobas e** packs are evaluated.

For more details see *Configuring realtime QC* on page B-219.

The following table briefly explains all rules that are selectable for realtime QC and lists the corresponding alarms.

For more information about the quality control rules, refer to *Rules for applying QC* in the Online Help.

Rule	Order	Judgement	Judgment area	Alarm
1-2SD	1	Either X or Y data value is above +2SD or below -2SD.	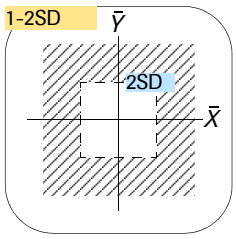	None
1-2.5SD	2	Either X or Y data value is above +2.5SD or below -2.5SD.	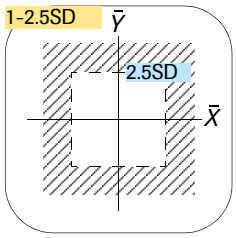	Q2.5SD
1-3SD	3	Either X or Y data value is above +3SD or below -3SD.	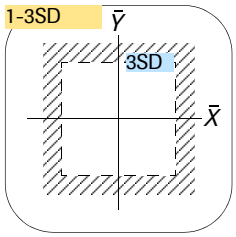	Q3SD
2-2SD	4	Both of X and Y data values are above +2SD or below -2SD.	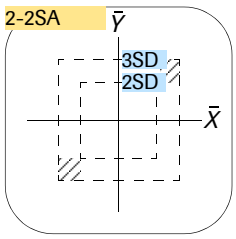	S2-2Sa
	6	The last two X or Y data values are above +2SD or below -2SD.	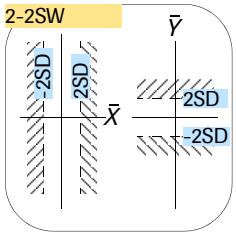	S2-2Sw

Table B-28 QC evaluation by Shewhart multi-rule method and corresponding alarms (Sheet 1 of 2)

Rule	Order	Judgement	Judgment area	Alarm
R-4SD	5	One of X and Y data value is above +2SD and the other is below -2SD.	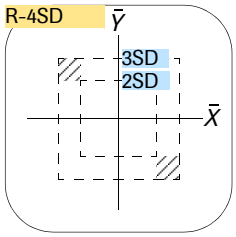	R-4SD
4-1SD	7	The last two X and Y data values are above +1SD or below -1SD. (Total 4 values)	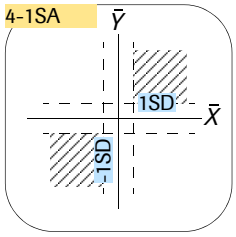	S4-1Sa
	8	The last four X or Y data values are above +1SD or below -1SD.	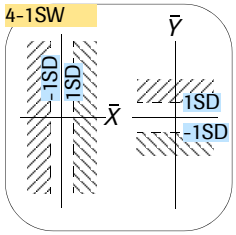	S4-1Sw
10X	9	The last five X and Y data values fall on the + or - side of the mean value. (Total 10 values)	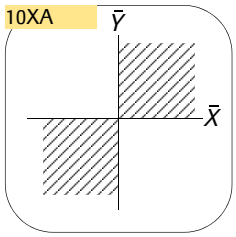	S10Xa
	10	The last ten X or Y data values fall on the + or - side of the mean value.	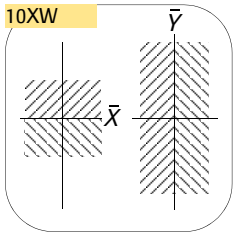	S10Xw

Table B-28 QC evaluation by Shewhart multi-rule method and corresponding alarms (Sheet 2 of 2)

Configuring realtime QC

Choose **QC** > **Individual** > **Realtime QC** to display the **Realtime QC** window.

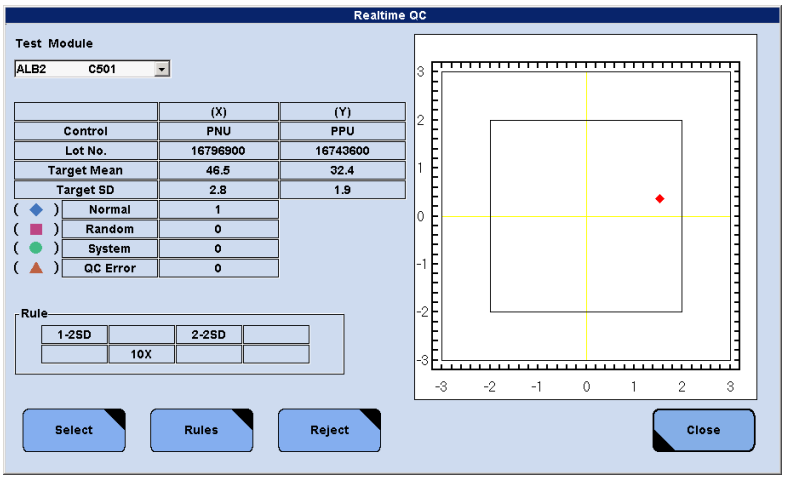

Figure B-111 Realtime QC window

This window shows a diagram with the QC results for a selected test and a selected pair of controls. The diagram is scaled to the target SD of control (X) and control (Y), respectively. The newest QC result is shown in red.

Select Choose this button to assign two controls—control (X) and control (Y)— to be evaluated by the multi-rule method.

Rules Choose this button to select rules used to evaluate the QC results. A pair of controls is compared against a known standard deviation (SD) and mean. If one or both of the controls fail a rule, the system continues applying the testing criteria for all selected rules. When at least one rule violation is found, the corresponding data alarm is issued.

The following symbols are used in the realtime QC plot:

◆ Normal: Without QC errors

■ Random: Random QC errors

● System: System QC errors

▲ With intermediate QC errors

Reject Choose this button to reject realtime QC results that have specific data alarms attached. Affected result points are removed from the plot.

Accumulation of QC results

At the end of daily operation, QC measurement data should be accumulated. There are two accumulation methods available: **Mean-R** and **X-R**. The choice for one or the other method is made under **Utility** > **System** (**Page 1/4**) > **QC Setting**.

For an explanation of the two accumulation methods, see *Accumulation methods for QC measurement data* on page B-203.

System settings for QC accumulation

Choose **Utility** > **System** (**Page 1/4**) > **QC Setting** to display the **QC Setting** window.

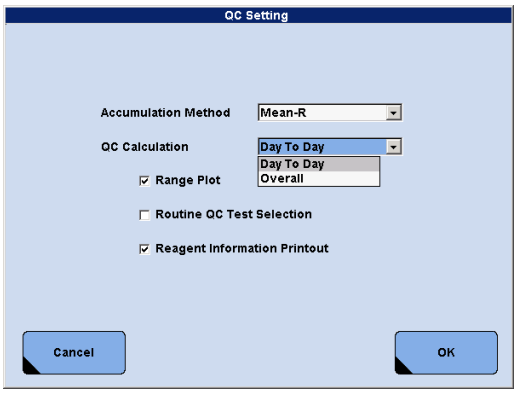

Figure B-112 Utility > System (Page 1/4) > QC Setting window

Accumulation Method Select one of the two accumulation methods, **Mean-R** or **X-R**, from this box.

See *Accumulation methods for QC measurement data* on page B-203.

QC Calculation If the accumulation method is **Mean-R**, select one of the two calculation methods, **DayToDay** or **Overall**, from this box to specify how mean and SD values are calculated in the cumulative QC.

This box is not available if **X-R** is selected in the **Accumulation Method** box.

For more information on system settings, see *System configuration* on page B-281.

Accumulating QC results

This section describes how to accumulate the QC data.

► To accumulate QC data

1. Select the data to be accumulated from the list on the **QC** > **Individual** screen.
2. Choose **Accumulate**.
3. If **Mean-R** is set as accumulation method, go to step 4.

   If **X-R** is set as accumulation method, type the consecutive number of the QC result to be used for the accumulation in the box or type 0 (zero) to transfer the mean value; then choose **OK**.
4. In the confirmation window choose **Yes** to accumulate the selected data.

   After accumulation the corresponding data are deleted from the **QC** > **Individual** screen and a new standard deviation (SD) and mean value is calculated and displayed on **QC** > **Cumulative**. But if later new QC data with this control is generated, the accumulated results will be displayed again in the QC chart with the indication that they are already accumulated.

■

QC Cumulative screen

To display this screen choose **QC** > **Cumulative.**

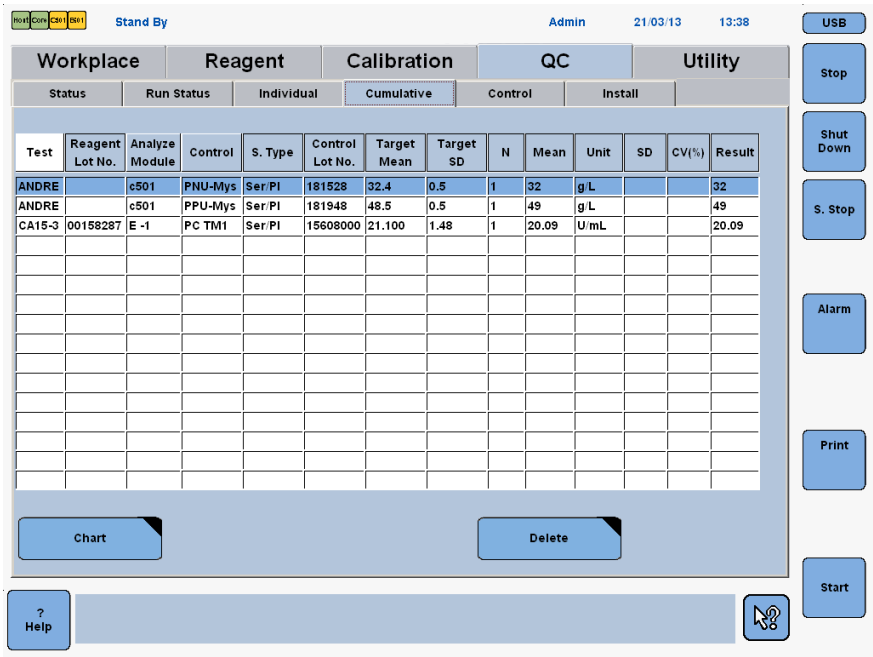

Test	Reagent Lot No.	Analyze Module	Control	S. Type	Control Lot No.	Target Mean	Target SD	N	Mean	Unit	SD	CV(%)	Result
ANDRE		c501	PNU-Mys	Ser/Pl	181528	32.4	0.5	1	32	g/L			32
ANDRE		c501	PPU-Mys	Ser/Pl	181948	48.5	0.5	1	49	g/L			49
CA15-3	00158287	E -1	PC TM1	Ser/Pl	15608000	21.100	1.48	1	20.09	U/mL			20.09

Figure B-113 QC > Cumulative screen

The **QC** > **Cumulative** screen lists all accumulated QC results.

The list can be sorted by test name, module, and control name. The table below explains columns whose meaning is different from that on the **QC** > **Individual** screen:

N	Number of accumulations (max. 500)
Mean	Accumulated mean for each test (using the accumulation method selected on **Utility** > **System** > **QC Setting**)

For more information about the different fields and buttons on this screen, refer to the *Online Help* of the particular field or button.

QC Control screen

The **QC** > **Control** screen provides an overview of all installed controls including the lot number and their expirations date.

When working with barcodes, controls are automatically identified. In case controls are processed in non-barcode mode, it is necessary to assign a rack number and rack position for each control. The current rack assignment is listed on the **QC** > **Control** screen.

Choose **QC** > **Control** to display this screen.

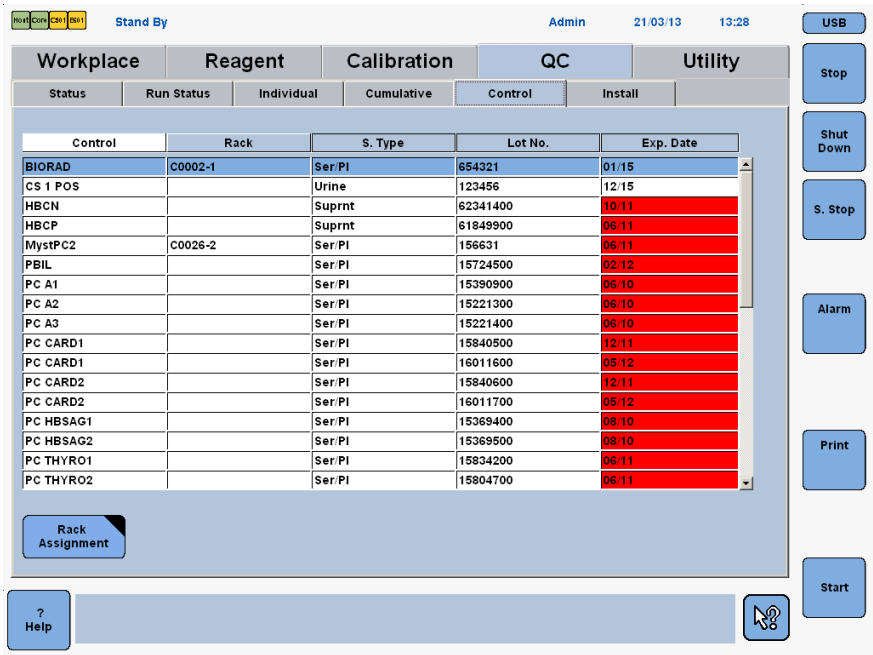

Control	Rack	S. Type	Lot No.	Exp. Date
BIORAD	C0002-1	Ser/Pl	654321	01/15
CS 1 POS		Urine	123456	12/15
HBCN		Suprnt	62341400	10/11
HBCP		Suprnt	61849900	06/11
MystPC2	C0026-2	Ser/Pl	156631	06/11
PBIL		Ser/Pl	15724500	02/12
PC A1		Ser/Pl	15390900	06/10
PC A2		Ser/Pl	15221300	06/10
PC A3		Ser/Pl	15221400	06/10
PC CARD1		Ser/Pl	15840500	12/11
PC CARD1		Ser/Pl	16011600	05/12
PC CARD2		Ser/Pl	15840600	12/11
PC CARD2		Ser/Pl	16011700	05/12
PC HBSAG1		Ser/Pl	15369400	08/10
PC HBSAG2		Ser/Pl	15369500	08/10
PC THYRO1		Ser/Pl	15834200	06/11
PC THYRO2		Ser/Pl	15804700	06/11

Figure B-114 QC > Control screen

To provide additional assignments or remove existing assignments follow the procedure on the following page.

► To assign a control to a specific rack and position

1 On **QC** > **Control** choose **Rack Assignment**.

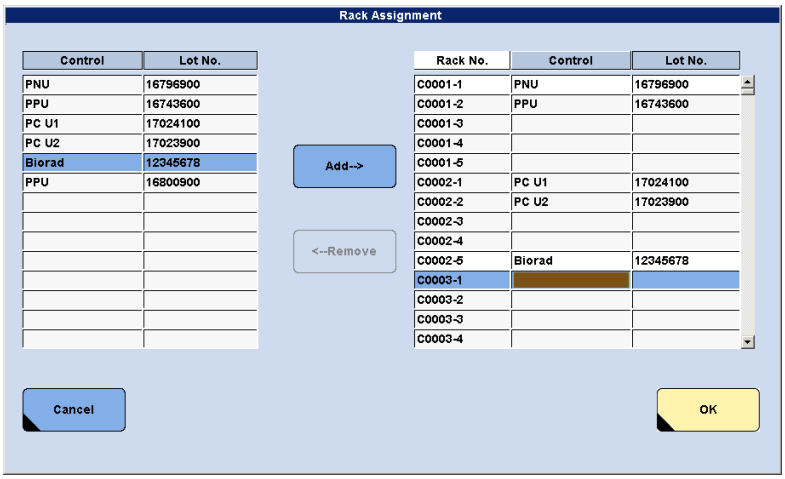

Figure B-115 QC > Control > Rack Assignment window

2 On the **Rack Assignment** window select the control from the list on the left and an unassigned rack number and position from the list on the right.

Different designations for control racks

There are following designations for the control racks:

- Rack color: white
- Label on rack: Q001 - Q999
- Software displays: C00001 - C00999 or C0001 - C0999

3 Choose **Add** to register the new assignment.

4 To remove an existing assignment select the concerned rack number and position from the list on the right and choose **Remove**.

5 Choose **OK** to save the changes and close the window.

■

Multiple rack positions for the same control (e 601)

You can assign the same **e** 601 control on consecutive positions on a rack. The system will switch to the next control position if the encoded volume for one control vial is used up.

The system will not pipette the control on the next position for the same **cobas e** pack.

QC Install screen

The following sections explain certain tasks associated with the **QC** > **Install** screen. Not all tasks are described, but the most important ones are discussed here.

To display this screen choose **QC** > **Install**

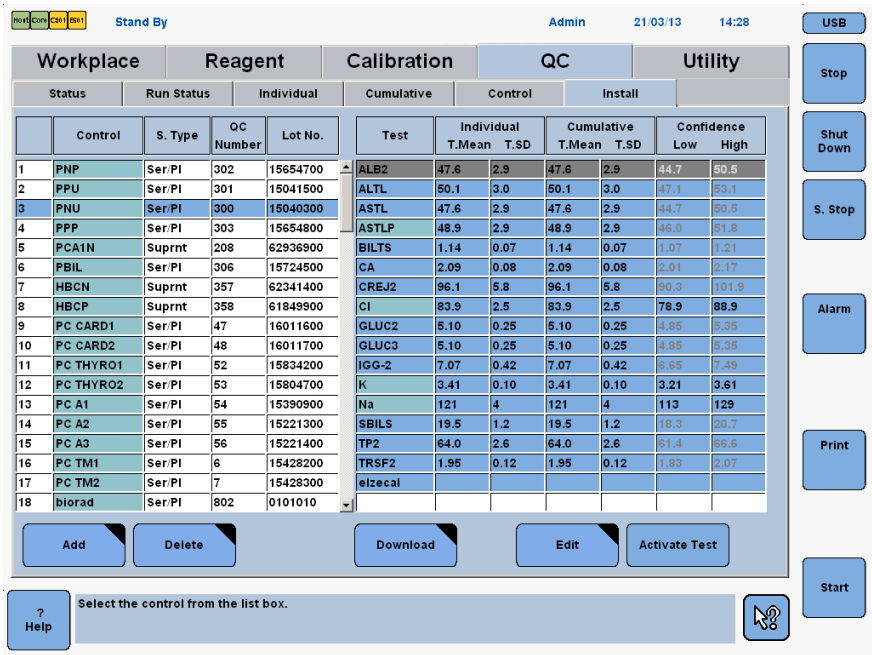

	Control	S. Type	QC Number	Lot No.
1	PNP	Ser/Pl	302	15654700
2	PPU	Ser/Pl	301	15041500
3	PNU	Ser/Pl	300	15040300
4	PPP	Ser/Pl	303	15654800
5	PCA1N	Suprnt	208	62936900
6	PBIL	Ser/Pl	306	15724500
7	HBCN	Suprnt	357	62341400
8	HBCP	Suprnt	358	61849900
9	PC CARD1	Ser/Pl	47	16011600
10	PC CARD2	Ser/Pl	48	16011700
11	PC THYRO1	Ser/Pl	52	15834200
12	PC THYRO2	Ser/Pl	53	15804700
13	PC A1	Ser/Pl	54	15390900
14	PC A2	Ser/Pl	55	15221300
15	PC A3	Ser/Pl	56	15221400
16	PC TM1	Ser/Pl	6	15428200
17	PC TM2	Ser/Pl	7	15428300
18	biorad	Ser/Pl	802	0101010

Test	Individual T.Mean	Individual T.SD	Cumulative T.Mean	Cumulative T.SD	Confidence Low	Confidence High
ALB2	47.6	2.9	47.6	2.9	44.7	50.5
ALTL	50.1	3.0	50.1	3.0	47.1	53.1
ASTL	47.6	2.9	47.6	2.9	44.7	50.5
ASTLP	48.9	2.9	48.9	2.9	46.0	51.8
BILTS	1.14	0.07	1.14	0.07	1.07	1.21
CA	2.09	0.08	2.09	0.08	2.01	2.17
CREJ2	96.1	5.8	96.1	5.8	90.3	101.9
Cl	83.9	2.5	83.9	2.5	78.9	88.9
GLUC2	5.10	0.25	5.10	0.25	4.85	5.35
GLUC3	5.10	0.25	5.10	0.25	4.85	5.35
IGG-2	7.07	0.42	7.07	0.42	6.65	7.49
K	3.41	0.10	3.41	0.10	3.21	3.61
Na	121	4	121	4	113	129
SBILS	19.5	1.2	19.5	1.2	18.3	20.7
TP2	64.0	2.6	64.0	2.6	61.4	66.6
TRSF2	1.95	0.12	1.95	0.12	1.83	2.07
elzecal						

Figure B-116 QC > Install screen

Use this screen to add, delete or download controls from the system and to enter or edit control values.

The list on the left of the screen displays all controls that are installed on the system. For all installed controls the control name is highlighted in green. Up to 100 controls can be installed on the system.

The list on the right of the screen displays details about the tests assigned to the control selected from the control list on the left. For a new control lot of an already installed control the activated tests are transferred.

Also calculated tests are available. Calculated tests are only displayed for Roche Diagnostics controls that are used by the tests in the calculation formula or for Non-Roche controls. For calculated tests, the control values must be determined and entered manually.

Deleting a control deletes all corresponding QC data

If you delete a control on the **QC** > **Install** screen, you also delete all corresponding QC data:

- QC > Individual
- QC > Cumulative
- QC > Run Status
- Workplace > Data Review > Routine View
- Workplace > Data Review > QC View

For information about particular tasks associated with this screen, see:
Downloading control data on page B-225
Editing control values on page B-228
Activating control tests on page B-231
Programming calculated tests on page B-296

Downloading control data

New controls may be installed on the system but the control tests are not run until they are activated from **QC** > **Install**.

See *Activating control tests* on page B-231.

To install a Roche Diagnostics control, you have to download control data from cobas link.

See *To download control data from cobas link* on page B-226.

To install a Non-Roche control, you add the control manually.

See *To add controls manually* on page B-227.

► To download control data from cobas link

1 Put the analyzer in standby.

2 Choose **QC** > **Install** > **Download** to open the **Download** window.

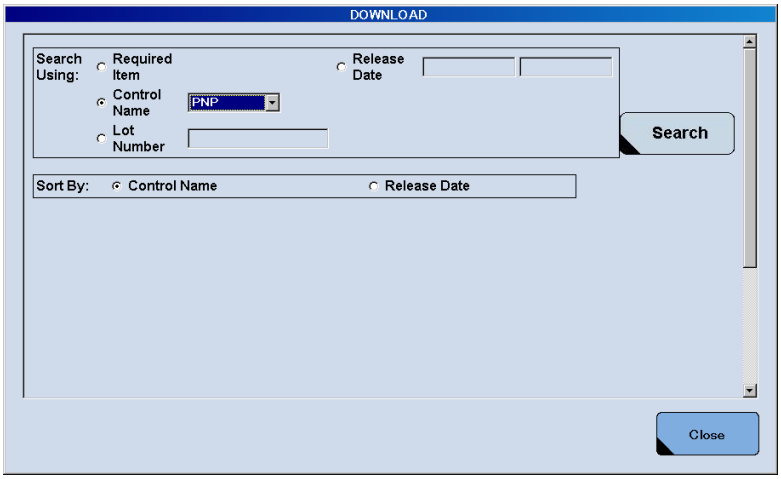

Figure B-117 Download window (tentative screen proposal)

3 Select one of the available search conditions (**Required Item**, **Calibrator Name**, **Lot Number**, or **Release Date**) in the **Search Using** area.

- **Lot Number** is the recommended search condition.

  Enter the first six digits of the lot number followed by two zeros.

- The option **Release Date** refers to the date when the calibrator was released by Roche Diagnostics.

4 Select **Release Date** in the **Sort By** area to sort the displayed search results by the release date.

5 Choose **Search**. A list of items that meet the given search conditions appears.

Several search results

If the **Download** window displays several search results, note the following:

- Choose **[Next >]** to display more search results.
- Use the scroll bar on the right side to display the **Download** button.

6 Select the check box(es) in the **Selection** column to download the necessary control information and choose **Download**.

Download latest version

Always download the latest version of control data. Select **Release Date** in the **Sort By** area to change the display order and select the control data with the latest **Release Date**.

7 Confirm the message on the confirmation windows to start the download.

All necessary information, such as applications covered by the control, target mean values, and target SD values, is automatically stored by the system.

■

To run control tests with a newly installed control it is necessary to activate these tests.

See *Activating control tests* on page B-231.

If necessary it is possible to edit the downloaded target values and/or confidence limits.

See *Editing control values* on page B-228.

► To add controls manually

1 Select a blank line from the control list on the **QC** > **Install** screen.

2 Choose **Add**.

3 Type all necessary data in the **Add Control** window.

The **Material No** range is from 801-999.

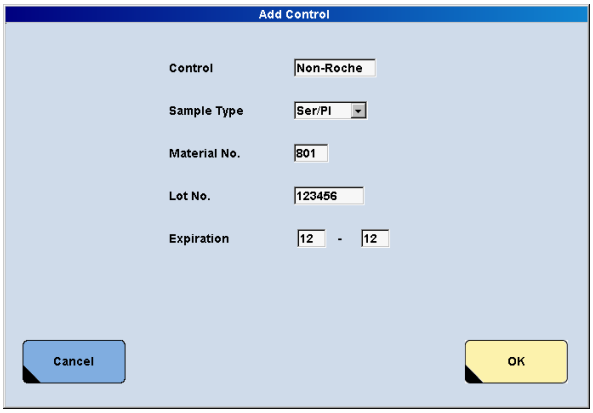

Figure B-118 Add Control window

4 Choose **OK**. The new control appears on the control list.

To run control tests with the newly installed controls, it is necessary to manually enter the target values for each test and then to activate these tests.

5 Choose **Edit** to enter target mean, target SD, and confidence limits if necessary.

6 Choose **Active Test** to activate the tests for the new control.

For more details see:
Editing control values on page B-228
Activating control tests on page B-231

■

Editing control values

This section describes how to edit the control values.

► To edit control values

1 On the **QC** > **Install** screen choose the control lot to be edited in the **Control** list on the left-hand side of the screen.

2 Choose **Edit** to display the **Edit Control** window.

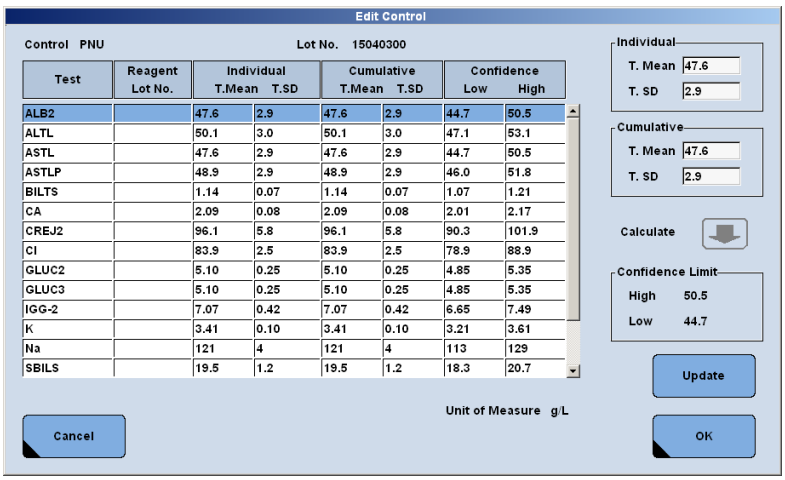

Figure B-119 Edit Control window

3 Select the test to be edited from the list. For the **e** 601 you must also select the reagent lot number. Target values for **e** 601 tests are reagent lot specific.

4 Type the new target mean and SD (standard deviation) values, cumulative and individual, in the appropriate text boxes.

If the test uses this control for its QC Violation assessment, the **Calculate** button is active; if not skip step 5.

For more information on QC violation, see *QC-triggered calibration (QC Violation)* on page B-161.

5 Choose **Calculate** to recalculate the confidence limits on the basis of the edited target and SD values and the QC violation rule (set under **Utility** > **Application** > **Calib**.).

6 Choose **Update** to update the window.

7 Repeat steps 3 to 6 for all tests assigned to this control that need to be edited.

8 Choose **OK** to save the changes and close the **Edit Control** window.

■

In case target and SD values are edited or entered manually the calculation of confidence limits is achieved by choosing the **Calculate** button. However, the confidence limits can also be typed directly in the text boxes under **Confidence Limit**.

The **Calculate** button and the boxes **High** and **Low** are not available if the selected test is not configured for **QC Violation**.

No update of manually edited control values

In case a value has been manually edited, this value will not be updated when you download new control values from **cobas** link. There is no indication in the software if the value was manually edited before.

- Check the control values after downloading.
- If you want to return to the original control value, delete the control and download it again from **cobas** link. Perform control measurements before you resume routine operation.

Updating of control values

In case of a reassignment of control values, the control values of the **cobas** 6000 system have to be updated.

- At the **c** 501 the new control values can be downloaded, or manually updated.
- At the **e** 601 the new control values are automatically updated via **cobas e** pack barcode, or can be manually updated.

No update of manually edited control values

In case a value has been manually edited, this value will not be updated when you download new control values from **cobas** link. There is no indication in the software if the value was manually edited before.

- Check the control values after downloading.
- If you want to return to the original control value, delete the control and download it again from **cobas** link. Perform control measurement before you resume routine operation.

*Updating the control values via **cobas e** pack barcode*

If the lot of the **cobas e** pack is newer than the installed controls, the reassigned control values are updated automatically via the barcode of a **cobas e** pack. The barcode of a **cobas e** pack contains the control values for specific reagent lot and control lot combination and it will be only used, if this lot combination is used on the system.

*Updating the control values manually (**e** 601)*

If both the **cobas e** pack and the control are already on the market, and reassigned control values are established for this reagent lot and control lot combination, then the customer has to update these values manually in the software. The customer will be informed about this task by an Important Note in the **cobas** e-library.

► To Update control values for c 501 via download

1 Download the control that needs to be updated. Ensure that you download the control data with the latest release date.

The new values automatically overwrite the old values.

See *Downloading control data* on page B-225.

■

No update of manually edited control values

In case a value has been manually edited, this value will not be updated when you download new control values from **cobas** link. There is no indication in the software if the value was manually edited before.

- Check the control values after downloading.
- If you want to return to the original control value, delete the control and download it again from **cobas** link. Perform control measurement before you resume routine operation.

► To update control values manually

1 Enter the control values for the reagent and control lot combination according to the Important Notice from **cobas** link on the **Edit Control** window.

See *Editing control values* on page B-228.

The new control values are communicated via product bulletin and Important Note in the **cobas** e-library.

■

No update of manually edited control values

In case a value has been manually edited, this value will not be updated when you download new control values from **cobas** link. There is no indication in the software if the value was manually edited before.

- Check the control values after downloading.
- If you want to return to the original control value, delete the control and download it again from **cobas** link. Perform control measurement before you resume routine operation.

Activating control tests

Only if controls are activated for the corresponding test the measurement will be performed. Tests can only be activated when the system is in standby.

► To activate control tests

1. On the **QC** > **Install** screen choose the appropriate control name in the list box on the left side of the screen.
2. Choose all tests to be activated in the list on the right of the screen.
3. Choose **Activate Test**. The test name highlights in green when the test is activated.

■

To activate a test, it must have target and SD values entered for the control.

See *Editing control values* on page B-228.

Automatic QC measurement

When a control interval time is specified on **Utility** > **Application** > **Range** for an application, it is possible to let the system automatically perform necessary QC measurements with controls that permanently stay in the rack rotor.

Configuring automatic QC measurement

This section describes how to configure automatic QC measurement.

► To program auto QC measurements

1. Select the **Control Interval Time** check box on the **Range** tab of **Utility** > **Application** for the relevant tests and specify a control interval from 1 to 1000 hours.
2. Reserve one or more rack rotor positions for control racks under **Utility** > **System** (**Page 3/4**) > **Rack Delivery**.

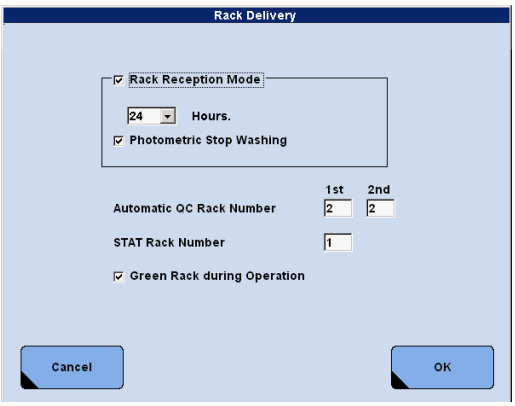

Figure B-120 Rack Delivery window

3. Assign a rack range for control racks that are to be used for auto QC measurements:
   - Choose **Utility** > **System** > **Change** (**Rack Assignment** area).
   - In the **Rack Assignment** window, choose the **Module Setting** tab and enter the rack range in the **Rotor** text fields.

■

When loaded onto the analyzer, the assigned control racks stay in the rack rotor and are used whenever a QC measurement is requested and the auto QC rack holds the appropriate control material.

If you load a fresh QC rack, the freshest one (the QC rack that has been loaded last) is always used for Auto QC.

An asterisk (*) in the first column of the **QC** > **Status** screen denotes which control is used as automatic QC.

Unloading auto QC racks from the rack rotor

This section describes how to unload auto QC racks from the rack rotor.

► **To unload auto QC racks from the rack rotor**

1 Choose **QC** > **Status** > **Automatic QC Unloading**.

2 In the **Automatic QC Unloading** window select the rack(s) to be unloaded and choose **Select**.

3 Choose **Execute**.

■

Expired controls in auto QC racks

- If you use auto QC racks and a control expires (the on board stability set on the **Utility** > **Application** > **Range** tab is exceeded), the system issues a yellow alarm. Additionally on the **QC** > **Status** screen, the first column of the corresponding control turns yellow.
- Unload the concerned auto QC rack, replace all controls, and reload the rack onto the analyzer.
- If you do not replace an expired control, the analyzer continues to use this control, which results in unreliable quality controls.

Priority within control materials of the same kind

- When there is more than one control available for a QC measurement, the system uses the control with the longest on board stability.
- If for example, an automatic QC rack is loaded for QC after calibration and this rack holds a control that is already present in an auto QC rack in the rack rotor, the auto QC control is not used if the additionally loaded control has a later expiration date.

Extended operation

This chapter contains additional information and tasks which are usually not required during normal routine operation.

In this chapter

Chapter 13

Instrument status B-237
Interlock function: Reset after stop B-239
Masking functions B-240
T-masking and P-masking B-241
Module masking B-241
Reagent masking B-242
Calibration masking (auto masking) B-243
Backup operation B-244
Activating backup operation mode B-244
Measuring samples in backup operation mode B-246
Data storage B-248
Preparing a DVD disk B-248
Formatting a DVD disk B-249
Making a DVD disk compatible (Windows XP control units only) B-250
Using a USB storage device B-251

Instrument status

This section explains the most important operational statuses (modes). The status is displayed in the upper left of the monitor.

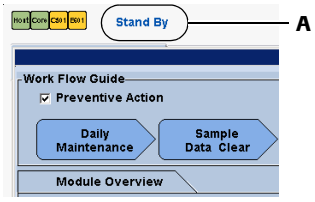

A Current instrument status

Figure B-121 Current instrument status

The following table shows the most important statuses:

Status	Explanation
Backup Wait For Rack Setting	Status for the backup operation mode. In this status, you have to place the sample racks through a door at the back of the **c** 501 module into the backup operation port. Intended to be used when a problem occurs in the rack sampler and a rack cannot be conveyed.
Initialize	Status while the instrument performs any kind of initialization. • After **Power Up**
Maintenance	Status while the instrument is performing any software-controlled maintenance item or check.
Operation	Status while the instrument is pipetting, measuring, or calculating. During this status it is not possible to change any settings in the software.
Parameter Check	Status in which the instrument checks the **c** 501 application parameters (**Utility** > **Application** > **Other**).
Pipe	Status in which a maintenance pipe is being executed.
Post Operation	Status after operation in which the instrument performs any kind of post operation. • Measurement cells are filled with system water (**e** 601). • All **cobas e** pack caps are closed to soft-close position (**e** 601).
Power Up	Status while the instrument is loading programs, performing self-checks, etc. • After starting the software • Before **Initialize** This status is not displayed in the status line.
Power Up Pipe	Status in which the instrument is performing the software-controlled maintenance power up pipe.
Preparation	Status while the instrument prepares any kind of reagent, checks incubator bath levels, and performs any kind of reset. • Tubings of ProCell and CleanCell • Priming of PreClean • Two times emptying and refilling of the reservoirs of ProCell and CleanCell • Checking the incubator positions by the gripper • Performing initial microbead mixing by the microbead mixer

Table B-29 Instrument statuses (Sheet 1 of 2)

Status	Explanation
Rack Collect End	Status after **Rack Supply Complete**. If the instrument works in the **Rack Reception Mode**: After all test requests are completed and the racks are all in the unloader. The instrument waits for additional samples. New samples will be processed automatically after pressing the **Start** button. If the instrument works in **MPA Connection Mode**: The system also changes to this status when **S.Stop** has been pressed.
Rack Collect End (Restart Disabled)	Status after a hardware problem occurred, e.g., rack stuck in the loader. If **Green Rack during Operation** is disabled: After inserting the green wash rack in automatic mode.
Rack Supply Complete	Status after the racks were loaded into the instrument. The rack loader tray is empty.
Reagent Dump	Status while a **c** 501 module dumps a **cobas c** pack.
Reagent Registration	Status while a **c** 501 module loads a new **cobas c** pack or an **e** 601 module registers a new **cobas e** pack.
Reagent Unloading	Status while a **c** 501 module unloads a **cobas c** pack.
Reconnect	Status after the module was in **Power Off** status and activated again (**Utility** > **Module Set** > **Module Setting**).
Shut Down	Status after pressing the **Shut Down** button. The system and control unit are disconnected. Power for keeping the reagents cool is still supplied.
Sleep	Status of low energy in which no immediate processing can be initiated by the operator.
Stand By	Status when the instrument does not perform any measurement activities. Settings can be changed and new information can be downloaded from **cobas** link.
Start Up Pipe	Status in which a maintenance start up pipe is being executed.
Stop	Status after the system was stopped. A system stop can be due to a hardware failure or because any of the safety devices requested an emergency stop. It can also be initiated by the operator pressing the **Stop** button. The system requires either a complete power off or at least a reset (**Utility** > **Maintenance**) to resume normal operation.

Table B-29 Instrument statuses (Sheet 2 of 2)

Interlock function: Reset after stop

If you open the top cover of the **c** 501 module, the interlock function stops all moving parts immediately and an alarm is issued. If you want to continue operation or perform a maintenance item, you have to put the instrument back to standby.

See *Interlock function* on page A-31.

► To release the analyzer in standby status after interlock

1. Close the top cover of the **c** 501 module and lock it.
2. Choose **Stop** (global button).
3. Choose **Yes** and confirm with **Yes**.
4. If an error message is displayed that the top cover was opened, delete this error message.
5. Choose **Utility** > **Maintenance**.
6. Select **Maintenance** (1) from the **Maintenance Type** list on the left.
7. Select **(1) Reset** from the **Maintenance** Items list on the right.
8. Choose **Select** to open the **Reset** window. Select the **c** 501 module to be reset.
9. Choose **Execute**.

■

Masking functions

Generally speaking, masking is a function that allows temporary exclusion of the masked element from analysis. Some types of masking are set automatically by the instrument depending on specific conditions, other types are manually set by the user.

The following table provides an overview of the masking functions:

Masking function	Use	Notes	Page
T-masking and P-masking	To disable analysis of a test or samples, e.g., until calibration or QC is performed	Manual	B-241
Module masking	To disable a single module for background maintenance or for loading of reagents	Manual	B-241
Reagent masking	To disable analysis of a test if a required reagent is empty	Automatic	B-242
Calibration masking (Auto masking)	To disable analysis with reagent for which a calibration failed or a calibration is requested due to reagent changeover	Automatic (if configured)	B-243

Table B-30 Masking functions

Requesting masked tests

Masked tests can be requested but not measured until the test is unmasked. Masked tests are indicated on the **Workplace** > **Test Selection** screen.

T-masking and P-masking

T-masking and P-masking are used to exclude specific tests from the current analysis.

There are two possibilities to mask a test:

- If **T-Mask** is selected, no patient samples, no controls, and no calibrations can be performed.
- If **P-Mask** is selected, the test is masked for patient samples only—calibration and QC can be performed.

Tests can be masked completely or just for specific modules and measuring cells. Masking tests on specific modules or measuring cells may be reasonable, for example, at times with reduced throughput (evenings, weekends) in order to save calibrators, controls, and time.

For a detailed description of the **Masking** window, refer to the *Online Help*.

► To mask a test

1. Choose **Start** (global button) > **Masking**.

   The **Masking** window shows the registered tests in the left column, the other columns represent the **c** 501 modules or measuring cells of the **e** 601 modules.

2. Mask a test completely, or just for an individual measuring cell:
   - Select a test in the **Name** column.
   - Choose the **T-Mask** button beneath the **Name** column to mask the complete test, or choose the **T-Mask** button beneath the module or measuring cell column to mask an individual module or measuring cell.

     The mask button toggles between **T-Mask**, **P-Mask**, and **Unmask**.
   - Choose the mask button repeatedly to toggle between **T-Mask**, **P-Mask**, and **Unmask**.
3. For **e** 601 modules: If a test is masked on one measuring cell, select the **mask on scheduling within module** check box to allow the system to mask the selected cell as soon as all pipetted samples are measured.

■

Module masking

The module masking function is used to disable an individual module. A masked module goes into standby. Certain maintenance items can be performed on a masked module while the other modules are still processing samples (so-called background maintenance).

For loading **cobas e** packs, ISE Ref., and some auxiliary reagents the corresponding module must be in standby. Module masking allows loading of reagents on one module while the others are operating.

For information on module masking for background maintenance, see Chapter 15 *General maintenance*.

Reagent masking

When a reagent is used up, the system issues an alarm and a red bar is displayed on the test key on the **Test Selection** screen. Tests that require this reagent are masked by reagent masking—unless another reagent pack is available as a standby reagent.

- Reagent masking is applied to:
  - Photometric and immunologic assay reagents
  - ISE reagents
  - Pretreatments
  - Reagent probe detergents
- Reagent masking is NOT applied to:
  - Reaction cell detergents
  - Diluent
  - EcoTergent

The test will be unmasked automatically as soon as you load new reagent. After registration, check the reagent volume, number of available tests, etc. on **Reagent** > **Setting**.

Rerun required in case of reagent masking

A rerun is required for samples whose sampling was terminated by reagent masking. Take the sample rack concerned from the unloader, place it into the rack loader and perform a rerun measurement. These samples will be shown as failed for the 1st run.

Calibration masking (auto masking)

Automatic calibration masking is a function that masks a **cobas c** pack or **cobas e** pack for a module or measuring cell when no valid calibration is available for this particular module or measuring cell.

This function is activated (or deactivated) for the entire system under **Utility** > **System** (**Page 2/4**) > **Calib Mask Setting**. When activated, the function can be selected individually for each application on the **Calib.** tab of the **Utility** > **Application** screen. This setting is set as the default in the applications.

Failed calibrations

When a calibration is successful, the calibration data are available for the measurement of patient samples and controls. When a calibration fails one or more quality criteria, this calibration gets the status *Failed*. *Failed* calibration data is not available for the corresponding **cobas c** pack or **cobas e** pack.

If automatic calibration masking is activated, the corresponding test with the *Failed* calibration is masked. If automatic calibration masking is not activated, the test is not masked but data alarms are attached to the results.

cobas c pack changeover

When a changeover request is present and automatic calibration masking is not activated, this **cobas c** pack will work with the last valid lot calibration data for this test (newest calibration). No alarm is attached to this result.

See *Newest calibration* on page B-165.

Reject button

The *Failed* calibration can be *rejected* by the operator (**Reject** button on **Calibration** > **Status**) so that the latest successful calibration, if it exists, is used for the upcoming samples and controls.

Backup operation

The backup operation mode can be useful if the rack loader/unloader or the rack rotor cannot convey any samples. This mode enables sample measurement on **c** 501 modules to continue.

In backup operation mode, only routine and STAT samples can be processed (including rerun samples).

- Backup operation mode is available only if barcode mode is selected and only on one **c** 501 module at a time.
- Backup operation mode is only available when the rack loader/unloader, rack rotor and the conveyor have been inactivated (**Utility** > **Module Set**).
- Backup operation mode is not available on **e** 601 modules.

Activating backup operation mode

Before using the backup operation mode, the rack rotor needs to be inactivated in the analyzer software.

► To inactivate the rack rotor

1 Choose **Utility** > **Module Set**.

2 Choose **Module Setting**.

3 Choose **Rack Rotor** to inactivate the rack rotor. The color of the **Rack Rotor** and **Conveyor** buttons changes to dark green.

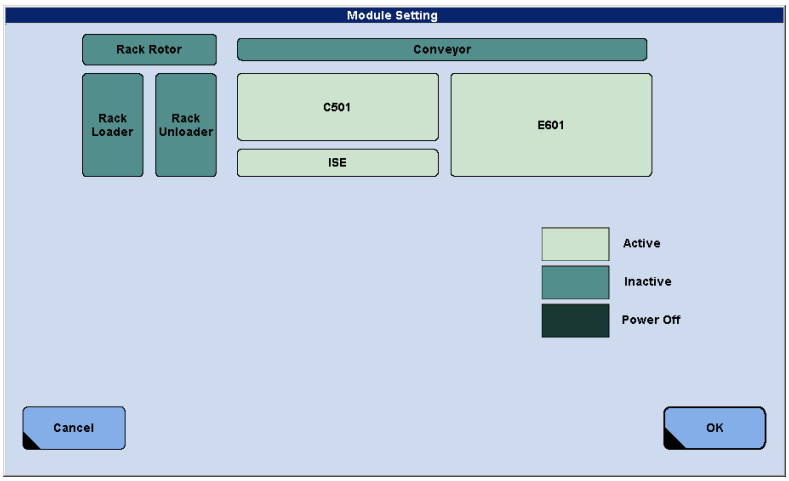

Figure B-122 Module Setting window

4 Choose **OK** to save the changes.

■

► To activate the backup operation mode

1 On the **System Overview** screen, select the **c** 501 module on which the samples should be processed.

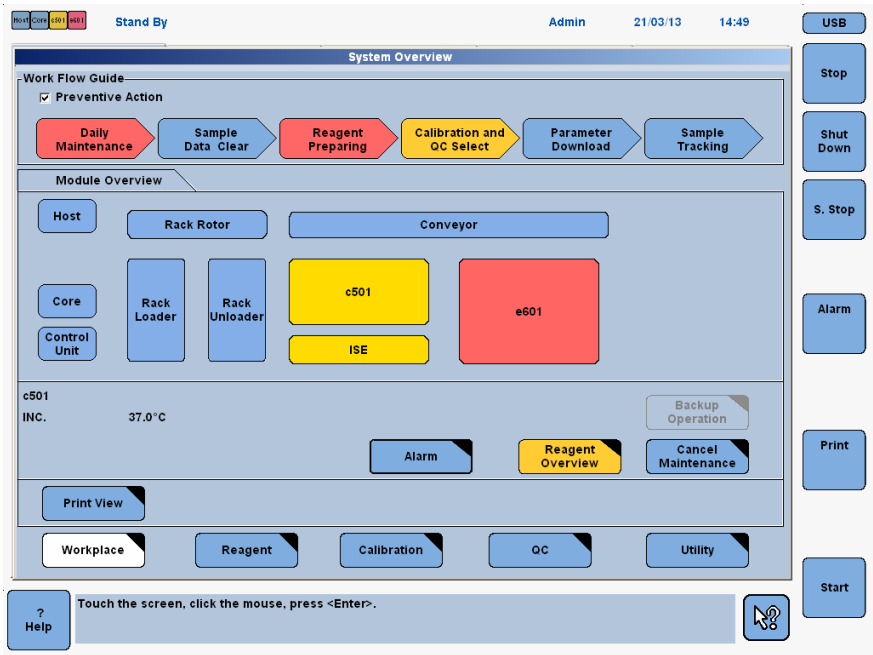

Figure B-123 System Overview window

2 Choose **Backup Operation**.

3 Choose **Start** on the **Backup Operation** window.

4 When the instrument goes into *Backup Wait For Rack Setting* status, the instrument is ready to measure samples.

See *Measuring samples in backup operation mode* on page B-246.

■

Measuring samples in backup operation mode

Tests can be selected similar to routine operation, either from the **Test Selection** screen or via Host.

In this mode, you have to place the sample racks through a door at the back of the **c** 501 module into the backup operation port.

► To measure samples in backup operation mode

1 Activate the backup operation mode.

See *Activating backup operation mode* on page B-244.

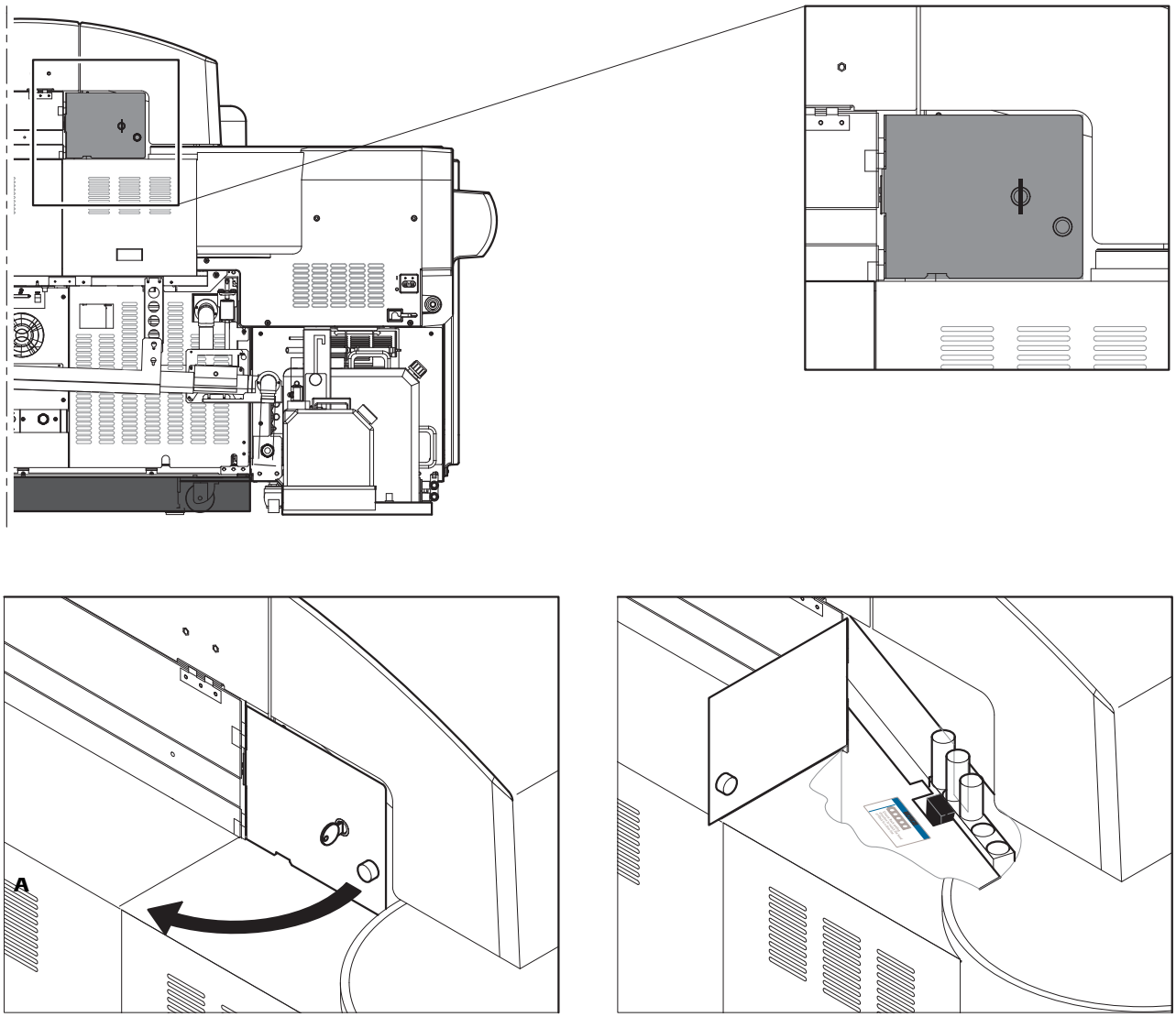

A Back door **B** Correct position of the rack

Figure B-124 Placing a rack into the backup operation port

2 Unlock and open the back door.

3 Place a rack containing barcoded samples into the backup operation port.

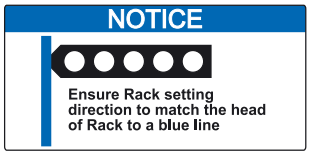

4 Check the position and direction of the rack:

- Align the left side of the rack with the blue line on the label.
- The sample barcodes must be oriented towards the instrument.

If the rack position or direction is wrong, an alarm will be issued.

5 Close and lock the back door.

6 After sample pipetting is completed and the instrument is in Stand by or in *Backup Wait For Rack Extraction* status, remove the rack through the back door.

To perform continuous measurement, remove the rack during *Backup Wait For Rack Extraction* status, place the next rack to be measured, and choose **Start**.

7 Repeat steps 1 to 6 until all sample racks are measured.

■

Data storage

All backup operations can be done on DVD disks or USB storage devices. DVD disks have to be prepared before using. For using a USB storage device, observe the given information.

Both storage media, DVD and USB storage device, are defined as mass storage in the software. If you choose **Mass Storage**, the instrument decides the medium depending on following rules:

- If a USB storage device is inserted, the instrument uses the USB as mass storage.
- If no USB storage device is inserted, the instrument uses a DVD disk as mass storage.

Preparing a DVD disk

cobas 6000 control unit computers are optionally equipped with a DVD disk drive. The DVD disk drive can be used for installing software updates and backing up and restoring data.

See *Archiving patient data* on page B-96.

The following DVD formats can be used:

- DVD-R
- DVD+R
- DVD-RW
- DVD+RW

DVD disks require formatting before use.

See *Formatting a DVD disk* on page B-249.

Any DVD from a **cobas** 6000 control unit running under Windows 7 can be read on other Windows 7 computers without any further steps. The DVDs are made compatible automatically.

If the **cobas** 6000 control unit uses the Windows XP operating system, follow the *Making a DVD disk compatible* procedure if you want to read the DVD on another computer other than a **cobas** 6000 control unit.

See *Making a DVD disk compatible (Windows XP control units only)* on page B-250.

Any DVDs created on a **cobas** 6000 Windows XP control unit can be read on a **cobas** 6000 Windows 7 control unit without any further steps.

Formatting a DVD disk

Danger of data loss

Formatting a DVD-RW or DVD+RW disk deletes all data on the disk.

- Before formatting a DVD disk, make sure that no important data is stored on the disk.

DVD-R and DVD+R disks can be formatted once only. DVD-RW and DVD+RW disks can be formatted several times.

- The DVD disk is formatted with UDF (Universal Disk Format). The DVD disk cannot be read on computers that do not support UDF.
- The procedure for formatting a DVD disk may differ, depending on the configuration of your system.
- Only format DVD disks on the **cobas** 6000 control unit computer. The **cobas** 6000 control unit computer may not be able to read DVD disks formatted on any other computer.

► To format a DVD disk

1. Make sure the analyzer is in standby.
2. Insert a new DVD disk into the DVD drive.
3. Press <Ctrl>+<F7> to display the **Format** window.
4. Choose **Quick (erase)** or **Full** from the **Format type** area.

   Depending on the type of DVD disk only **Full** is available.
5. Choose **Start** and confirm the formatting process with **OK**.

   The DVD disk is formatted. This may take several minutes.
6. After formatting is finished confirm with **OK**.

   The DVD disk is ready for a data backup now.

■

Making a DVD disk compatible (Windows XP control units only)

If you want to use a DVD+R or DVD-R disk on another computer than the **cobas** 6000 control unit computer, the DVD disk must be made compatible (*finalized* or *closed*).

After making the DVD disk compatible, no more data can be stored on the DVD-R or DVD+R disk. The disk is *finalized*.

A DVD-RW disk can be used on other computers without being made compatible.

► To make a DVD disk compatible

1. Make sure the analyzer is in standby.
2. Insert the DVD disk into the DVD drive.
3. Press <Ctrl>+<F8> to display the **Compatibility** window.
4. Choose **Start** and confirm the process with **OK**.

   The DVD disk is made compatible. This may take several minutes.
5. After making compatible is finished confirm with **OK**.

   The DVD disk is ready to be used on other computers.

■

Using a USB storage device

USB storage devices can be used for several kinds of data backups and restores. Wrong handling of a USB storage device may result in data loss or malfunction of the instrument.

- Insert or remove a USB storage device only when the instrument is in standby mode.
- At any one time only one USB storage device can be in use. Before inserting a USB storage device, check that no other USB storage device is inserted.
- Only remove USB storage devices after choosing **USB** (global button).
- Use only USB storage devices that are tested by your local Roche service representative.

► To plug in a USB storage device

1. Ensure the instrument is in standby.
2. Ensure that no other USB device is plugged into the control unit computer.
3. Plug the USB storage device into any USB port of the control unit computer.

■

► To remove a USB storage device

1. Ensure the instrument is in standby.
2. Choose **USB** (global button).
3. Confirm with **Yes**.
4. Remove the USB storage device.

■

Device and data management

Although at any time only one USB storage device can be in use, for different data different USB storage devices can be used. Roche Diagnostics recommends to use three USB storage devices to manage the backup of the instrument data:

- Device 1 for patient and QC result backup
- Device 2 for backup of system parameter
- Device 3 for temporary use

Data	Corresponding screen	Folder	File name and extension	Device 1	Device 2	Device 3
Patient data	**Workplace** > **Data Review** > **Backup Data**	7600	Binary: xxx.res xxx.smp ASCII: xxx.asc	×		
QC data	**Workplace** > **Data Review** > **Backup Data**	7600	Binary: xxx.res xxx.smp ASCII: xxx.asc	×		
FD Parameter	**Utility** > **Maintenance** > **Maintenance** > **(15) Parameter Read/Write**	7600	25 paramter files		×	
Print buffer	**Print** (global button) > **View** > **Media Write**	7600	xxx.txt			×
Trace doc	**Utility** > **Maintenance** > **Maintenance** > **(40) Trace Doc Export**	TraceDoc	SVP_TRANS_4_ YYYYMMDDHHMI.zip YYYY = year MM = month DD = day			×

Table B-31 Recommended use of storage devices

Configuration

This chapter describes the configuration of the **cobas** 6000 analyzer series for customers.

In this chapter

Chapter 14

Application B-255
Overview B-255
Installing an application B-256
Downloading new application parameters B-259
Updating an application B-262
Description of application parameters B-264
Description of application parameters – Analyze tab B-265
Dilution ratios (e 601) B-266
Description of application parameters – Calib. tab B-267
Duplicate limit (e 601) B-268
Auto masking B-269
Auto calibration B-269
Description of application parameters – Range tab B-271
Unit of measure B-273
Report name B-275
Automatic rerun B-275
Technical limit (c 501) B-276
Repeat limit B-276
Control interval time B-276
Automatic QC on board stability B-276
Qualitative fields (c 501) B-277
L, H, I (serum index, c 501) B-277
Expected values B-278
Description of application parameters – Other tab (c 501) B-279
Setting up individual calibration curves for each ISE sample type B-280

System configuration B-281
Programming system parameters B-282
Generating multiple results for a single test B-284
Assigning tests or profiles to test keys B-285
Maintenance / Pipe Setting / Power Up Pipe buttons B-288
Rack Delivery button B-288
Module Set B-291
Assigning a test to a module B-292
Inactivating a module B-294
Calculated Tests (c 501) B-295
Programming calculated tests B-296
Programming compensated tests B-299
Special Wash B-301
Programming a special wash for c 501 modules B-301
Reagent probe wash B-302
Cell wash B-304
Sample probe wash B-306
Programming a special wash for e 601 modules B-308
Reagent probe wash B-308
Sample probe wash B-309
Report Format B-310
Customizing patient report format B-310
Comparison of data monitor format and report format B-313
Data Monitor/Report (monitor format) B-313
Data Monitor/Report (report format) B-313
Saving system parameters B-314
Restoring system parameters B-316

Application

All required applications were installed during system installation by your Roche service representative. This section explains how to add new applications and configure specific application parameters.

Overview

General information for photometric tests

Up to 117 photometric applications can be registered (test numbers 1-117). The following test numbers are fixed:

118	Na
119	K
120	Cl
121	Serum index L
122	Serum index H
123	Serum index I

General information for immunological tests

Up to 60 heterogeneous immunoassays can be installed irrespective of the number of modules (test number 141-200). An application can be programmed for each module and measuring cell (E1-1, E1-2 and E2-1, E2-2) individually.

Downloading a new application

Before you can load the corresponding **cobas c** pack or a **cobas e** pack for a new application, the application parameters have to be downloaded via **cobas** link. Otherwise, the **cobas c** pack will be rejected by the system and the **cobas e** pack test will not be displayed correctly on different screens of the **Reagent**, **Calibration**, and **Utility** menu.

For more information, see *To configure the application data* on page B-256.

Installing an application

The **cobas** 6000 analyzer series requires application parameters, calibrator data, and control data for each application. All data required for a new application can be downloaded from **cobas** link.

Additional settings

In addition, various settings and customizing of default parameters are required to complete the installation.

Required operator level

Most operations of installing an application can be performed by an operator with administrator level. However, some operations require an operator with supervisor level.

Installing procedures

To install an application, you have to perform the following procedures:

- *To configure the application data*
- *To configure the calibrator data*
- *To configure the control data*
- *To configure additional settings*
- *To finalize the installation*

► To configure the application data

1 Download the application parameters.

For more information, see *Downloading new application parameters* on page B-259.

2 Customize the application parameters.

- Optional

For more information, see *Description of application parameters* on page B-264.

3 Assign the application to a module.

For more information, see *Assigning a test to a module* on page B-292.

4 Assign the application to a test key or profile.

For more information, see *Assigning tests or profiles to test keys* on page B-285.

5 Define the reagent warning levels.

- Optional, but recommended

For more information, refer to the *Online Help* of the **Reagent Level Check** window.

6 Define an application specific-instrument factor, as stated in the instructions for use for individual tests.

- Only necessary for certain **c** 501 applications, for example Creatinine Jaffé

Online Help of the **Calibration** > **Status** > **Instrument Factor** window.

■

► To configure the calibrator data

1 Download the calibrator data.

For more information, see:
To download calibrator data from cobas link on page B-190
ISE calibration on page B-197

2 Edit the decimal places or the calibrator concentration values of the calibrator.

- Only possible for **c** 501
- Optional

For more information, see:
Editing calibrator concentrations (c 501) on page B-193
Changing decimal places used for reportable data (c 501) on page B-195

3 Assign the rack positions for the calibrator.

- Only necessary if you are working with non-barcoded calibrators

For more information, see *Assigning calibrator positions* on page B-182.

■

► To configure the control data

1 Download the control data.

For more information, see *Downloading control data* on page B-225.

2 Activate the control for the new test.

For more information, see *Activating control tests* on page B-231.

3 Assign the rack positions for the control.

- Only necessary if you are working with non-barcoded controls

For more information, see *To assign a control to a specific rack and position* on page B-223.

4 Configure an automatic QC measurement for the control.

- Optional

For more information, see *Configuring automatic QC measurement* on page B-232.

■

► To configure special wash

1 Check whether special washes are necessary and, if required, program the special washes.

- **c** 501 tests: Refer to the latest instructions for use for NaOH-D / SMS / Sample Cleaner 1 or 2 / SCCS (Special wash requirements method sheet).

  For more information, see *Programming a special wash for c 501 modules* on page B-301.

- **e** 601 tests: Contact your Roche service representative.

  For more information, see *Programming a special wash for e 601 modules* on page B-308.

■

► To configure additional settings

1 Customize the patient report format.

- Optional

For more information, see *Customizing patient report format* on page B-310.

2 Program a calculated test.

- Only possible for **c** 501
- Optional

For more information, see *Programming calculated tests* on page B-296.

■

► To finalize the installation

1 Load the **cobas c** pack or the **cobas e** pack.

For more information, see:
To load a cobas c pack on page B-53
To load cobas e packs on page B-54

2 Calibrate the application and perform QC measurements.

For more information, see:
Requesting and cancelling calibrations manually on page B-171
Requesting QC measurements on page B-209

3 Add the new applications to the **Preferences** of the **cobas** e-library (**cobas** link).

For more information on working with the **cobas** e-library, refer to the **cobas** e-library Operator's Manual.

4 Make a backup of the system parameters after finishing the installation of all new applications.

For more information, see *Saving system parameters* on page B-314.

■

Downloading new application parameters

The following procedure describes how you can download new application parameters from **cobas** link. It can be performed by an operator with administrator level password only.

► To download application parameters from cobas link

1 Choose **Utility** > **Application** to display the **Application** screen.

2 Choose **Download** to start the download of information about additional applications.

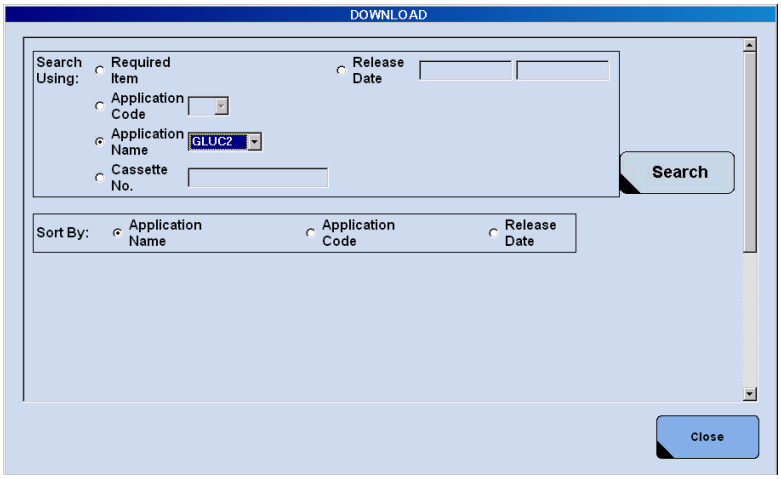

Figure B-125 Download window (application)

3 Select the search condition in the **Search Using** area:

- **Application Code**: Select the application code (ACN) from the list box.

  The application code number (ACN) is available in the instructions for use of the corresponding **cobas c** pack. Up to four applications (ACN) per **cobas c** pack are possible.

  The **Application Code** is the simplest search option for **c** 501 applications.

- **Application Name**: Select the application name from the list box.

  The **Application Name** is the simplest search option for **e** 601 applications. The application name is printed on the **cobas e** pack label.

4 Select **Release Date** in the **Sort By** area to sort the displayed search results by the release date.

5 Choose **Search**. A list of items that meet the given search conditions appears.

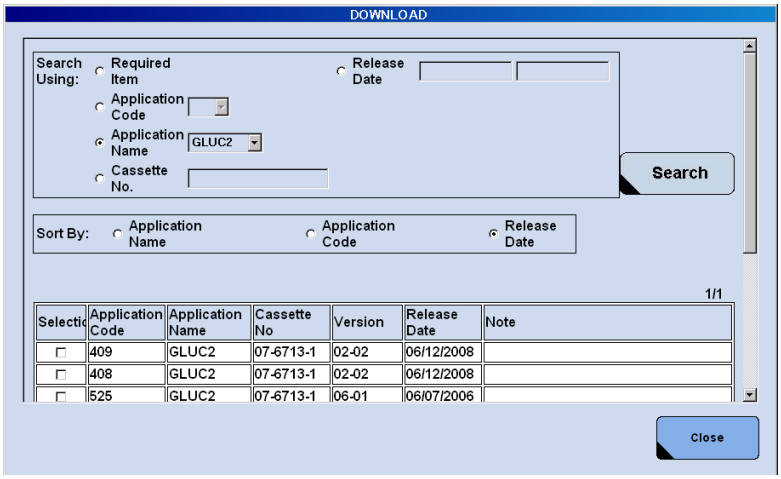

Figure B-126 Download window (application)

In the **Notes** column you can find additional information about the application such as reason for change.

Several search results

If the **Download** window displays several search results, note the following:

- Choose **[Next >]** to display more search results.
- Use the scroll bar on the right side to display the **Download** button.

6 Select the check box of the list item to be downloaded.

Download the data with the latest release date.

7 Choose **Download** and confirm with **OK**.

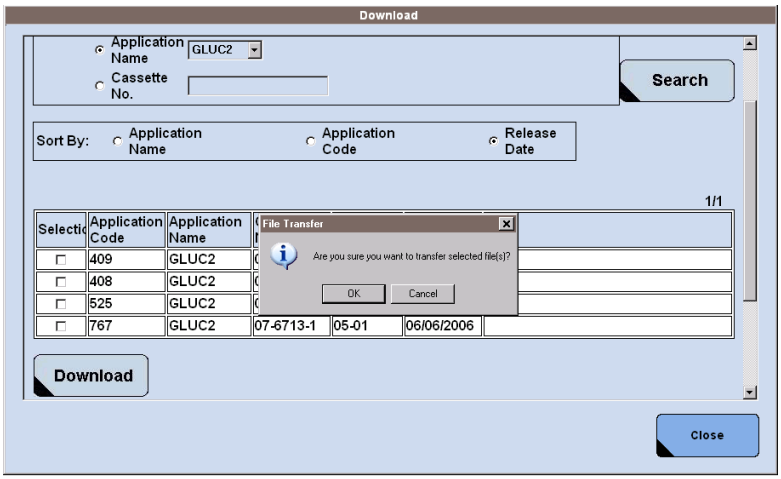

Figure B-127 Download application: File transfer

8 Choose **OK** to confirm the **Confirmation** window.

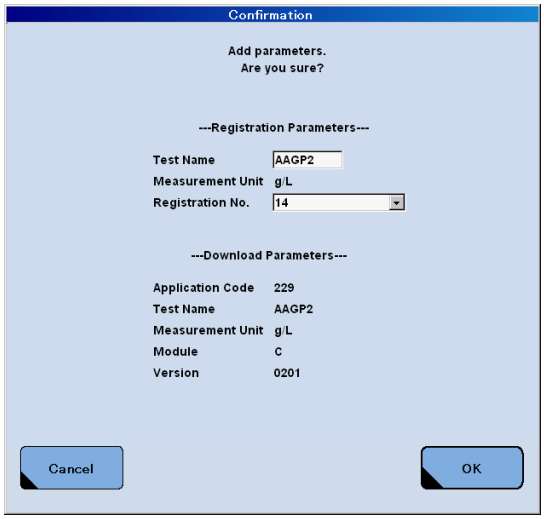

A Confirmation window **c** 501

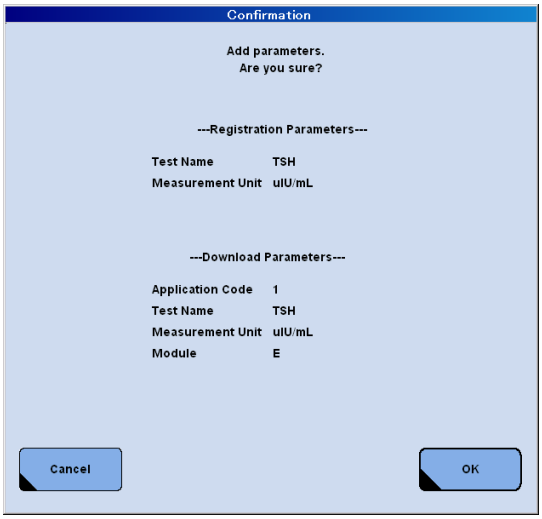

B Confirmation window **e** 601

Figure B-128 Download application: Confirmation window

The **Confirmation** window displays the downloaded application data, such as the **Test Name**. It is possible to assign a different test name (up to 5 characters) if needed (**c** 501 application only).

Changing of the Test Name (c 501)

Once the application has been downloaded, the test name cannot be changed. In order to change the test name, the application needs to be deleted and downloaded again.

9 Choose **Close** to return to the **Utility** > **Application** screen. The application parameters of the downloaded application are displayed on the **Application** screen. Some parameters are user-definable.

See *Description of application parameters* on page B-264.

10 To continue the application installation, assign the application to a module.

See *Description of application parameters* on page B-264.

Up to four applications per cobas c pack

Up to four applications per **cobas c** pack are possible on the **cobas** 6000. For example Ca: 706 (10 min) and 726 (STAT 3 min). Install all required applications of a **cobas c** pack before you load the **cobas c** pack on the system.

To install an application for a loaded **cobas c** pack, the **cobas c** pack must be unloaded first. After installation of the additional application, this **cobas c** pack cannot be loaded again. A new **cobas c** pack must be used.

■

Updating an application

When an application is modified by Roche Diagnostics and the application is already installed, the application needs to be updated. If this occurs, you will be informed via **cobas** link.

Update of editable application parameters

If an application's e-barcode is downloaded from **cobas** link while another e-barcode (same or other version) for the same ACN is already present on the system, most of the editable application parameters, including text fields, check boxes, drop down menus and option buttons are not overwritten.

Exceptions:

- For **c** 501 editable parameters in the **Other** tab (**Calibrator Code** and pipetting volumes) and serum index values (**Range** tab) are overwritten.
- For **e** 601 the settings in the **QC Violation** area as well as the values for **Repeat Limit** and **Expected Values** always jump back to default.

There is no indication in the software if the editable parameter originates from the old or new e-barcode or has been manually entered. Therefore check the application parameters after overwriting.

In order to make sure that all application parameters are according to the new application's e-barcode, Roche Diagnostics recommends to delete the current application before downloading the new one. Perform calibration and control before you resume routine operation.

*Updating **c** 501 applications*

To update a **c** 501 application, you must download the newest version of the application parameters from **cobas** link.

To download the newest version of the application parameters, follow the procedure for downloading application parameters.

See *To download application parameters from cobas link* on page B-259.

The following table shows the changes made by modifying a **c** 501 application and how to identify the newest version.

Data	Changed by modifying	Indicate newest version
Application code number (ACN)	Not changed	
Application name	Not changed	
Version	Changed	Highest version number
Release date	Changed	Latest release date

Table B-32 Changes made by modifying a **c** 501 application

After downloading the newest application parameters check, all further application-specific data and settings, for example customized application parameters, assigned calibrator and control data.

If updating of calibration or control data is necessary, you will be informed via **cobas** e-library.

*Updating **e** 601 applications*

To update an **e** 601 application, you must delete the existing application and install the updated application.

To delete an application, refer to **Utility** >**Application** screen. Select the application in question in the **Test** list and choose **Delete**.

To install an updated application, follow the procedure for installing an application.

See *Installing an application* on page B-256.

To verify the change please check for the latest release date.

Description of application parameters

It is possible to change some of the default parameters installed with an application to suit individual laboratory practice. These procedures can be performed by an operator with administrator level password only.

Update of editable application parameters

If an application's e-barcode is downloaded from **cobas** link while another e-barcode (same or other version) for the same ACN is already present on the system, most of the editable application parameters, including text fields, check boxes, drop down menus and option buttons are not overwritten.

Exceptions:

- For **c** 501 editable parameters in the **Other** tab (**Calibrator Code** and pipetting volumes) and serum index values (**Range** tab) are overwritten.
- For **e** 601 the settings in the **QC Violation** area as well as the values for **Repeat Limit** and **Expected Values** always jump back to default.

There is no indication in the software if the editable parameter originates from the old or new e-barcode or has been manually entered. Therefore check the application parameters after overwriting.

In order to make sure that all application parameters are according to the new application's e-barcode, Roche Diagnostics recommends to delete the current application before downloading the new one. Perform calibration and control before you resume routine operation.

For instructions on changing default application parameters, see:
To define application dilution ratios (e 601) on page B-266
To define calibration timeouts on page B-270
To define application duplicate limit (e 601) on page B-268
To define application auto masking on page B-269
To define the unit of measure for an application on page B-273
To define application report name on page B-275
To change technical limit (photometric and ISE tests) on page B-276
To change repeat limit on page B-276
To change qualitative fields on page B-277
To change expected values on page B-278
To change default settings on page B-278

Description of application parameters – Analyze tab

The following sections explain certain settings associated with the **Analyze** tab on **Utility** > **Application** screen. Not all settings are described, but the most important ones are discussed here.

To display this screen choose **Utility** > **Application** > **Analyze**.

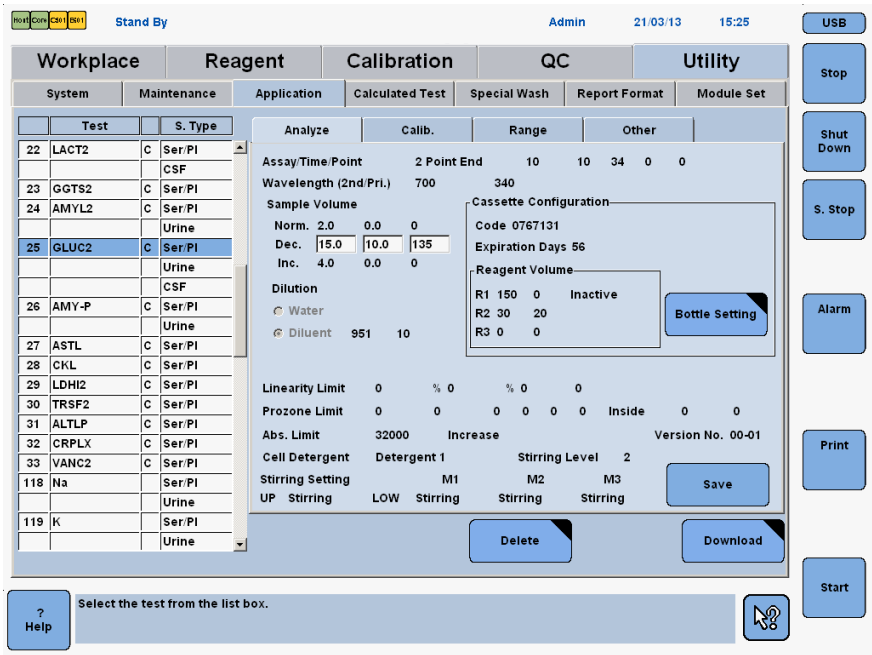

Figure B-129 Analyze tab on Utility > Application screen (photometric tests)

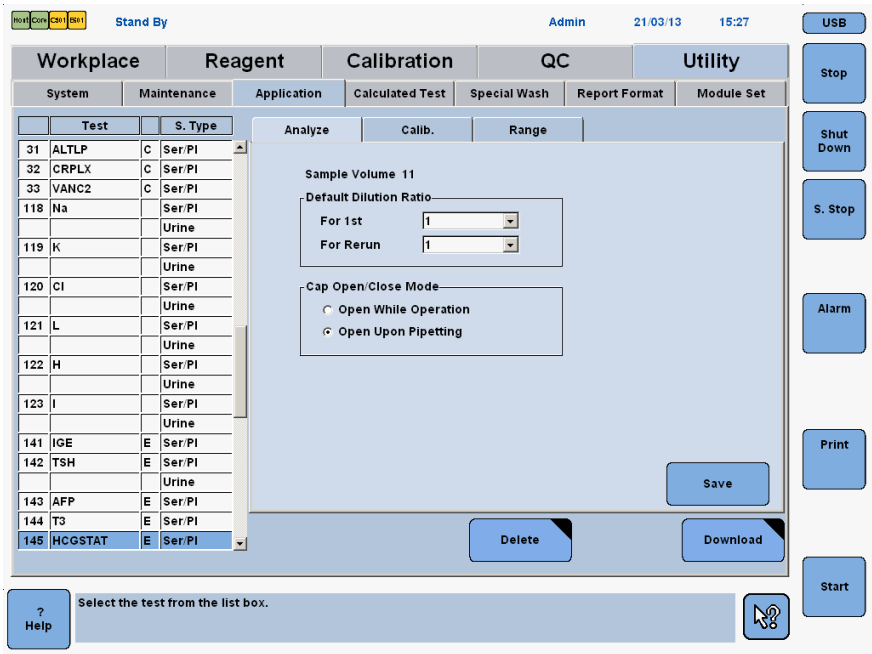

Figure B-130 Analyze tab on Utility > Application screen (immunological tests)

Dilution ratios (e 601)

The **Default Dilution Ratio** area is used to define the dilution ratio for the selected application.

► To define application dilution ratios (e 601)

1. Choose **Utility** > **Application** >**Analyze**.
2. Select the test to be edited from the **Test** list on the left.
3. Select the required dilution for the first run in the **For 1st** list box and for reruns in the **For Rerun** list box of the **Default Dilution Ratio** area.

   - A **2** selected from the list box represents a 1:2 dilution.
   - A **cobas e** pack must be registered for the test, before the **Default Dilution Ratio** can be entered.

4. Repeat steps 2 and 3 for all necessary tests.
5. Choose **Save** to save the changes made.

■

Description of application parameters – Calib. tab

The following sections explain certain settings associated with the **Calib.** tab on **Utility** > **Application** screen. Not all settings are described, but the most important ones are discussed here.

To display this screen choose **Utility** > **Application** > **Calib**.

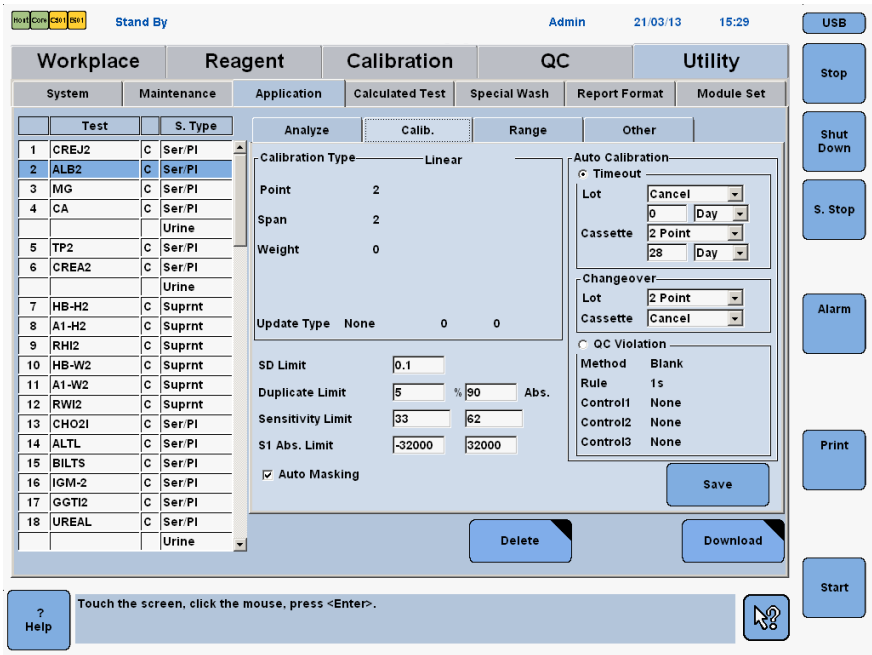

Figure B-131 Calib. tab on Utility > Application screen (Photometric test)

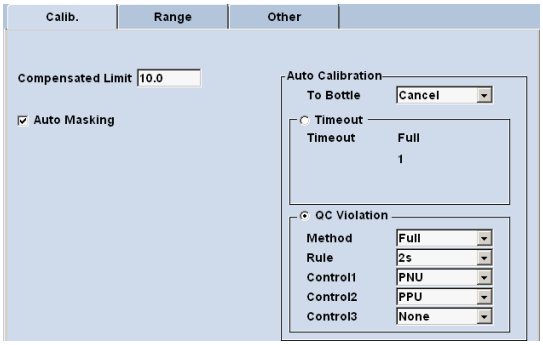

Figure B-132 Calib. tab on Utility > Application screen (ISE test)

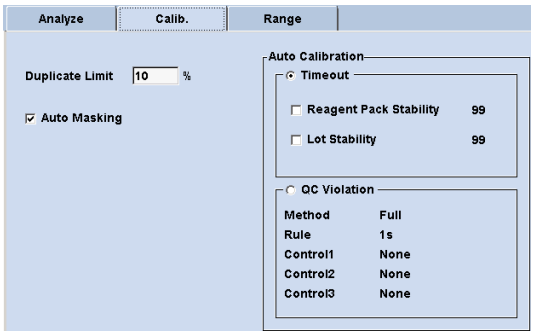

Figure B-133 Calib. tab on Utility > Application screen (Immunological test)

For instructions on changing default application parameters on the **Calib.** tab, see:
To define application auto masking on page B-269
To define calibration timeouts on page B-270
To define application duplicate limit (e 601) on page B-268

Duplicate limit (e 601)

Nearly all Roche Diagnostics **e** 601 calibrators have a default duplicate limit of 10%. This field has a default entry after the download. It is not recommended to change it.

► To define application duplicate limit (e 601)

1. Choose **Utility** > **Application** > **Calib**.
2. Select the test to be edited from the **Test** list on the left.
3. Type the required duplicate limit (0-64), expressed as a percentage (%), in the **Duplication** text box.
4. Repeat steps 2 and 3 for all necessary tests.
5. Choose **Save** to save the changes made.

■

Auto masking

If **Auto Masking** is selected, the particular test requiring calibration due to a failed calibration will be masked automatically.

For more information about calibration masking, see *Calibration concept – masking* on page B-169.

► To define application auto masking

1 Choose **Utility** > **Application** > **Calib**.

2 Select the test to be edited from the **Test** list on the left.

3 Check the **Auto Masking** check box to select the test for auto masking.

4 Repeat steps 2 and 3 for all necessary tests.

5 Choose **Save** to save the changes made.

■

To activate the auto masking function, select the **Auto Masking** check box on **Utility** > **System** (**Page 2/4**) > **Calib. Mask Setting**.

Auto calibration

When you load a new application onto the system, the time-triggered calibration (Timeout) is activated by default. If you intend to work with QC-triggered calibration, you must configure the QC violation parameters and activate QC-triggered calibration (**QC Violation**).

For more information, see:
To activate QC violation on page B-269
To define calibration timeouts on page B-270

► To activate QC violation

1 On the **Calib.** tab of the **Utility** > **Application** screen select the test to be edited from the **Test** list on the left.

2 Select **QC Violation.**

3 Select the Calibration update **Method** (**Blank**, **Span**, **2 Point**, or **Full**) from the first list box.

4 Select the rule for checking the QC measurement from the **Rule** list.

Calibration will be recommended if a QC result falls out of the specified range (expressed in multiples of one standard deviation).

5 Select the controls that should trigger a calibration.

Up to three controls can be assigned. If any of the QC results falls out of the specified range, a new calibration is recommended.

For each of the assigned controls, an individual confidence interval must be specified. The confidence interval can be calculated automatically using the standard deviation selected in the **Rule** field or it can be entered manually.

For more information, see *Editing control values* on page B-228.

■

Important notes for QC violation:

- At least one control must be selected for Control 1, 2, or 3.
- If a control is deleted, the setting will be changed to None automatically.
- Make sure that at least one control selection for QC violation is other than **None**. Otherwise the QC violation function remains activated if the corresponding radio button is selected but cannot be carried out.
- If calibration is recommended due to QC violation because of control result out of specified range, the control material can be run again. If the controls recur within their confidence limits, the calibration request is removed.

For more information about calibration, see:
Causes for automatic calibration recommendations on page B-160
Calibration concept – c 501 on page B-162
Calibration concept – e 601 on page B-166

► To define calibration timeouts

1 On the **Calib.** tab of the **Utility** > **Application** screen select the test to be edited from the **Test** list on the left.

For e 601 applications:

Before selecting the check box **Timeout** and defining timeout periods, please check the instructions for use. If the check box is not selected, the default values read from the **cobas e** pack barcodes are used (in most cases 7 days for **cobas e** pack stability and 28 days for lot stability).

2 Select **Timeout**.

3 Define the required calibration method and the timeout period:

- For **c** 501 module applications:
  - Select the calibration method for lot calibration from the corresponding list box.
  - Type the required timeout period for lot calibration in the corresponding text box and select the time unit from the corresponding list box.
  - Repeat the last two steps for cassette calibration.
- For ISE applications:
  - Select the calibration method from the corresponding list box.
  - Type the required timeout period for ISE calibration, in days, in the corresponding text box.
- For **e** 601 applications:
  - Select the R**eagent Pack Stability** check box and type the required timeout period for cassette calibration, in days, in the corresponding text box.
  - Select the **Lot Stability** check box and type the required timeout period for lot calibrations, in days, in the corresponding text box.

If you don't want to use timeouts, select both check boxes and enter 0 in the text boxes.

4 Choose **Save** to save the changes made.

■

Description of application parameters – Range tab

The following sections explain certain settings associated with the **Range** tab on **Utility** > **Application** screen. Not all settings are described, but the most important ones are discussed here.

To display this screen choose **Utility** > **Application** > **Range**.

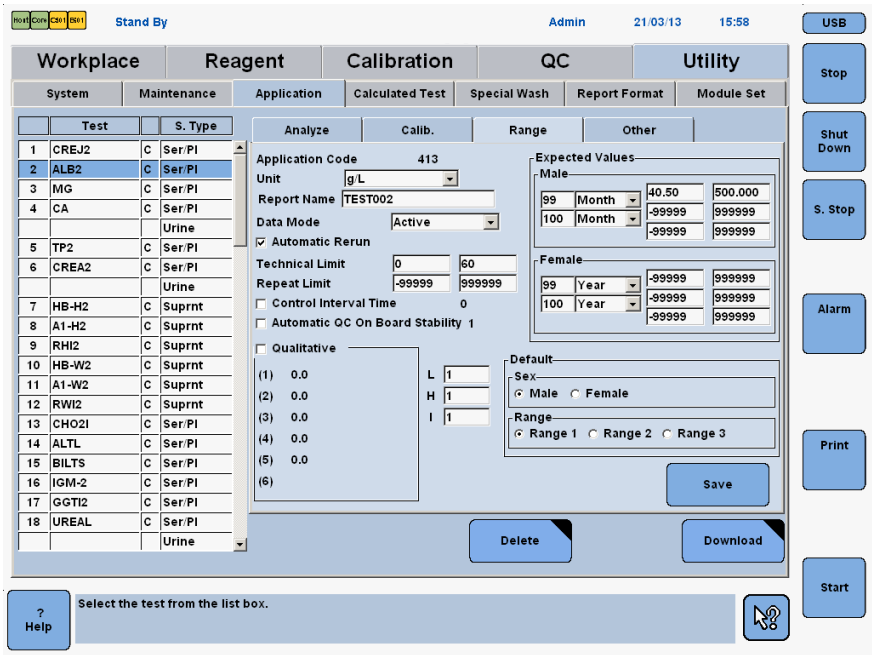

Figure B-134 Range tab on Utility > Application screen (Photometric test)

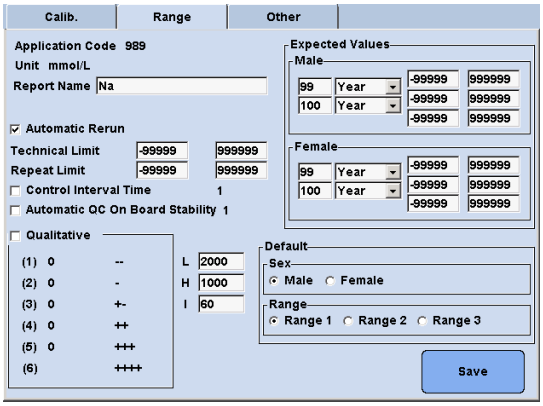

Figure B-135 Range tab on Utility > Application screen (ISE test)

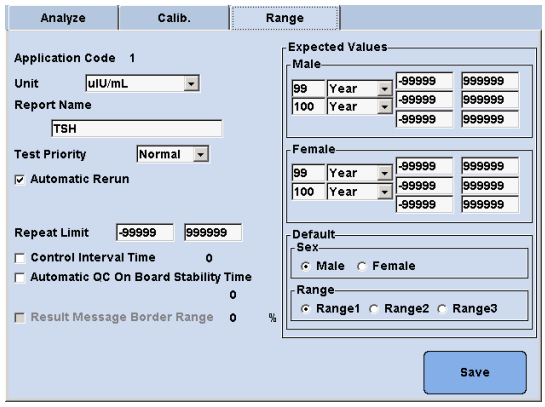

Figure B-136 Range tab on Utility > Application screen (Immunological test)

For instructions on changing default application parameters on the Range tab, see:
To define the unit of measure for an application on page B-273
To define application report name on page B-275
To define application automatic rerun on page B-275
To change technical limit (photometric and ISE tests) on page B-276
To change repeat limit on page B-276
To change qualitative fields on page B-277
To define serum indices on page B-277
To change expected values on page B-278
To change default settings on page B-278

Unit of measure

⚠ CAUTION

Incorrect result due to wrong calibration

You can change the unit of measure after an application has been installed. However, if the unit is changed after the test in question has already been calibrated, we strongly recommend deleting that test application and then reinstalling it.

- After changing the unit of measure, always recalibrate and run controls in order to ensure no incorrect results are reported.

The unit of measure can be selected in this field. Up to four units can be displayed.

The unit of measure can be changed only once by using the drop down list and selecting a different unit. After the unit is changed the field is not a drop down list any more. This can be done after the download of the application or any time later. Be aware, that the system does not recalculate the existing results after the unit is changed.

It is recommended to change the unit of measure directly after download of the application.

► To define the unit of measure for an application

1. On the **Range** tab of the **Utility** > **Application** screen select the test to be edited from the **Test** list on the left.
2. Select the required unit of measure from the **Unit** list box.
3. Choose **Save** to save the changes made.
4. Choose **Yes** to confirm the message of the **Unit Conversion** window.
5. On the **Range** tab of the **Utility** > **Application** screen check the **Technical Limit** against values mentioned the instructions of use

An insignificant difference may be seen between the measuring range values listed in the instructions for use and the value(s) obtained by the instrument after unit conversion. This is caused by the rounding of value(s) during conversion from the unit in the instrument readable data to the unit being used. This may affect the last digit of the value, and has no diagnostic significance.

■

► To change the unit of measure for a previously calibrated c 501 application

1. Backup the database and delete patient data (**System Overview** > **Sample Data Clear** > **Backup and Clear**).

   If sample data clear is executed, all the records of the samples are deleted and QC data are moved to the **QC view**.

   For details, see *Sample Data Clear button* on page B-48.

2. Unload all the **cobas c** packs for this test (**Reagent** > **Setting** > **Cassette Unloading**).

   For details, see *Unloading reagent cassettes* on page B-132.

3. Delete the test application (**Utility** > **Application > Delete**).

4. Reinstall the test application (**Utility** > **Application** > **Download**).

   For details, see *Installing an application* on page B-256.

5. Define the unit of measure (**Utility** > **Application** > **Range**).

   For details, see *To define the unit of measure for an application* on page B-273.

6. Load new **cobas c** packs.

   For details, see *To load a cobas c pack* on page B-53.

7. Install the calibrator values for this test under **Calibration** > **Install** > **Download**.

   For details, see *Downloading or updating calibrator data* on page B-188.

8. Check or edit the calibrator concentration values and decimal places under **Calibration** > **Install > Edit.**

   For details, see:
   Editing calibrator concentrations (c 501) on page B-193
   Changing decimal places used for reportable data (c 501) on page B-195

9. Install the control values for this test under **QC** > **Install** > **Download**.

   For details, see *Downloading control data* on page B-225.

10. Calibrate the test and perform control measurements.

    For details, see *Requesting calibration and QC and printing load lists* on page B-56.

■

cobas c pack unloaded to delete the application have to be discarded, since they will not be accepted by the **c** 501 module again.

► To change the unit of measure for a previously calibrated e 601 application

1 Backup the database and delete patient data (**System Overview** > **Sample Data Clear** > **Backup and Clear**).

If Sample data clear is executed, all the records of the samples are deleted and QC data are moved to the QC view.

For details, see *Sample Data Clear button* on page B-48.

2 Change the unit of measure (**Utility** > **Application** > **Range**).

For details, see *To define the unit of measure for an application* on page B-273.

Changing the unit deletes all QC data

All QC data for the application will be deleted when you change the unit of this application.

■

Report name

This section describes how to define an application report name.

► To define application report name

1 On the **Range** tab of the **Utility** > **Application** screen select the test to be edited from the **Test** list on the left.

2 Type the desired report name for the test in the **Report Name** text box.

3 Choose **Save** to save the changes made.

■

Automatic rerun

This section describes how to define automatic rerun.

► To define application automatic rerun

1 On the **Range** tab of the **Utility** > **Application** screen select the test to be edited from the **Test** list on the left.

2 Select **Automatic Rerun**.

3 Choose **Save** to save the changes made.

■

For more information, see:
Processing reruns on page B-71
Rerun list on page D-63

- If automatic rerun is selected, the sample remains on the rack rotor until the results of the sample are available.
- To perform automatic reruns, the automatic rerun function must be selected (**Start** (global button) > **Automatic Rerun**).

Technical limit (c 501)

► **To change technical limit (photometric and ISE tests)**

1. On the **Range** tab of the **Utility** > **Application** screen select the test to be edited from the **Test** list on the left.
2. In the first **Technical Limit** box, type the lower limit. In the second box, type the upper limit.
3. Choose **Save** to save the changes.

■

Repeat limit

For each test a clinically relevant range can be typed in here. If the test result is outside this limit but inside the **Technical Limit** of the application, the test is repeated using the same sample volume and dilution as in the first run.

► **To change repeat limit**

1. On the **Range** tab of the **Utility** > **Application** screen select the test to be edited from the **Test** list on the left.
2. In the first **Repeat Limit** box, type the lower limit of the range. In the second box, type the upper limit of the range.
3. Choose **Save** to save the changes.

■

The concentration range of the **Repeat Limit** must lie within the **Technical Limit**.

For more information, see *Processing reruns* on page B-71.

Control interval time

This check box and the corresponding text box is used to define the time period (1 to 1000 hours) to repeatedly run controls for the selected test. The software checks every 30 minutes whether the set control interval time is exceeded or not. If the interval time is exceeded a QC measurement is automatically requested by the system (Cause: Timeout) or an auto QC measurement is triggered.

See *Automatic QC* on page B-202.

Automatic QC on board stability

This check box and corresponding text box is used to define the on board stability (1 to 1000 hours) for the control material on the rack rotor for the selected test. If Auto QC racks are used and the control material stability expires (On Board stability exceeded), the system displays a yellow alarm. Please refer to the instructions for use of the control to find out the on board stability time.

The analyzer checks every 30 minutes if the on board stability is exceeded or not. In this case the controls have to be taken from the analyzer and be replaced with new ones.

See *Automatic QC* on page B-202.

Qualitative fields (c 501)

This function is important for DAT (drugs of abuse testing). Qualitative reporting can be chosen instead of quantitative reporting for each photometric test. In the text boxes of the first column (1-5) the upper limit concentration range has to be entered. Any result less than or equal to the value defined here will be printed with the text defined in the second box.

If a result is higher than range (5) the text defined in text box (6) is taken.

► To change qualitative fields

1. On the **Range** tab of the **Utility** > **Application** screen select the test to be edited from the **Test** list on the left.
2. Select the **Qualitative** check box to activate the qualitative fields.
3. Type the correct information in the first qualitative text box for (1).
4. Type the symbol that prints on the report in the second text box for (1).
5. Repeat steps 3 to 4 for numbers (2) to (6).
6. Choose **Save** to save the changes.

■

For correct upload setting refer to the Host Interface Manual.

L, H, I (serum index, c 501)

The serum index reference values can be defined individually for each photometric and ISE test. In the serum index fields **L** (lipemic), **H** (hemolytic), **I** (icteric) the ranges that are downloaded with the application are displayed.

Limits for L, H, and I index are implemented in conventional units in all application settings. When using international units for L, H, and I index the respective serum index limits have to be changed in all applications.

If at least one serum index field has a value other than 0, serum indexes are checked. If 0 is entered, the corresponding serum index interference check is not performed.

► To define serum indices

1. On the **Range** tab of the **Utility** > **Application** screen select the test to be edited from the **Test** list on the left.
2. Select the text box of the corresponding serum index **L**, **H**, or **I**.
3. Enter the recommended values from the instructions for use of the corresponding test.

   Remember to enter the values in the same unit as those used for the test results (conventional units or international units).

■

To use the serum index function, the serum index application must be installed and the serum index requested on the **Workplace** > **Test Selection** screen.

For more information on serum indices, refer to the *Online Help:*
Range tab of the **Utility** > **Application** screen
c 501 - Serum index principles on page F-61

Expected values

Expected Values area is used to define the reference ranges for men and women in three different age groups. If a result for this test is outside of the defined ranges, the result receives a H or L flag (only on the printed result).

In the first two text boxes enter an age range in days, months or years. To the right of the age range there are three lines for expected values. In the first line you define the expected values below the age range. In the second line you define the expected values for the specified age range. And in the last line you define the expected values above the age range.

If you don't want to have the H or L flag on the printed result for any of these ranges enter -99999 to 999999.

► To change expected values

1. On the **Range** tab of the **Utility** > **Application** screen select the test to be edited from the **Test** list on the left.

   Now, you can change the settings in the **Expected Values** area.

■

► To change expected values ranges and corresponding age

1. In the **Expected Values** area, choose the first text box and enter a patient age for cutoff of the first expected value range. Then select the unit (**Day**, **Month**, **Year**) for that age in the list box.
2. Type the lower and upper reference values for males in the **Male** area in the last 2 text boxes in the row for the specified test.
3. Repeat steps 1 and 2 for the second age cutoff in the second row of text boxes in the **Male** area.
4. In the third row of text boxes, type the lower and upper reference values for males of all ages above the second age cutoff.
5. Repeat steps 1 to 4 for female age cutoff ranges.

   Now, you can change the default settings.

■

► To change default settings

1. In the **Default Sex** area, select either the **Male** or **Female** option as the default if no sex is specified.
2. In the **Default Range** area, select the default age range (**Range 1**, **Range 2** or **Range 3**) to be used if no age range is specified.
3. Choose **Save** to save the changes.

■

Description of application parameters – Other tab (c 501)

The following section explains how to set up two independent sets of calibration curves for different sample types for each ISE test Na^+, K^+, and Cl^-.

To display this screen choose **Utility** > **Application** > **Other**.

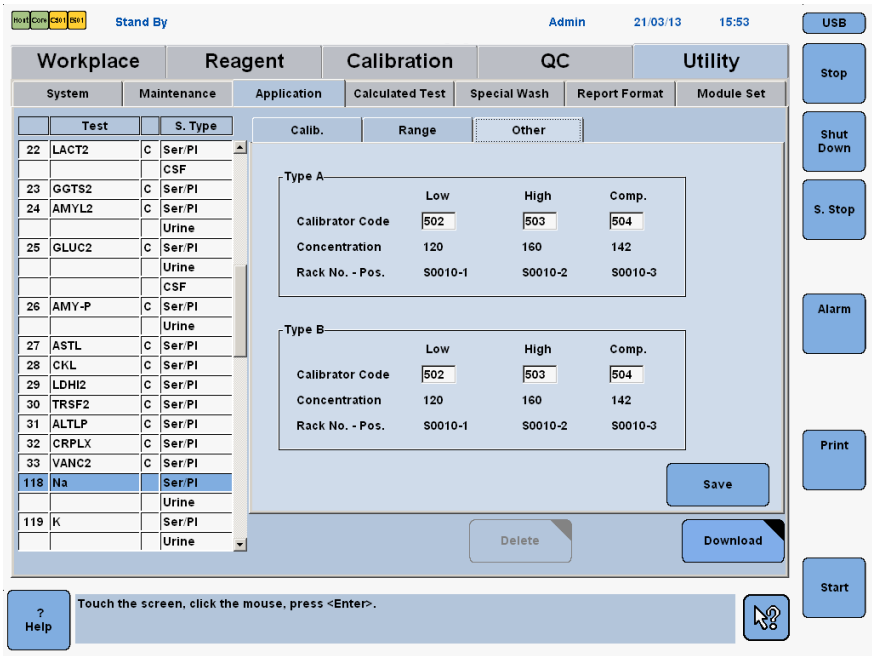

Figure B-137 Other tab on Utility > Application screen (ISE test)

Use the **Other** tab to set up two independent sets of calibration curves for different sample types for each ISE test Na^+, K^+, and Cl^-. Choose an ISE test from the test list to display calibrator codes, concentration values, and rack position numbers.

Setting up individual calibration curves for each ISE sample type

The **Other** tab of the Na, CI and K contains two areas, **Type A** and **Type B**, where each area relates to one of the two independent calibration curves.

To use these calibration curves for a specific sample type, the following settings have to be done:

- Set the calibrators used for generating the calibration curve type A and B.
- Assign an ISE calibration curve for each sample type.

► To set the calibrators for calibration curve type A and B

1. On the **Other** tab of the **Utility** > **Application** screen select the ISE test to be edited from the **Test** list on the left.
2. Enter the codes of the calibrators used for generating the calibration curve type A in the corresponding text boxes for each calibrator, **Low**, **High** and **Comp**.
3. Repeat steps 2 for calibration curve **Type B**.
4. Choose **Save** to save the changes made.

■

If only one calibration type is used—if you use the same calibration curve for all sample types— then you must enter the same calibrator codes for **Type A** and **Type B**. It is not possible to inactivate one of the calibrator curves.

► To assign an ISE calibration curve for each sample type

1. Choose **Utility** > **System** (**Page 3/4**) > **ISE Calib Setting**.
2. Select the calibration curve type (**ISE-A** or **ISE-B**) for each sample type.
3. Choose **OK** to save the changes made.

■

For more information, see:
Calibration concept - ISE applications on page B-163
ISE calibration on page B-197

If a field is grayed out, the field is read only for the password level logged onto the system. At an administrator level, if the field is not grayed out, it can be edited.

System configuration

This section explains how to perform certain tasks associated with the **Utility** > **System** menu.

The entire module set (module configuration, test assignment) should be performed before the other settings (control, calibrator settings)

For more information on configuring the modules, see *Module Set* on page B-291.

To display this screen, choose **Utility** > **System**.

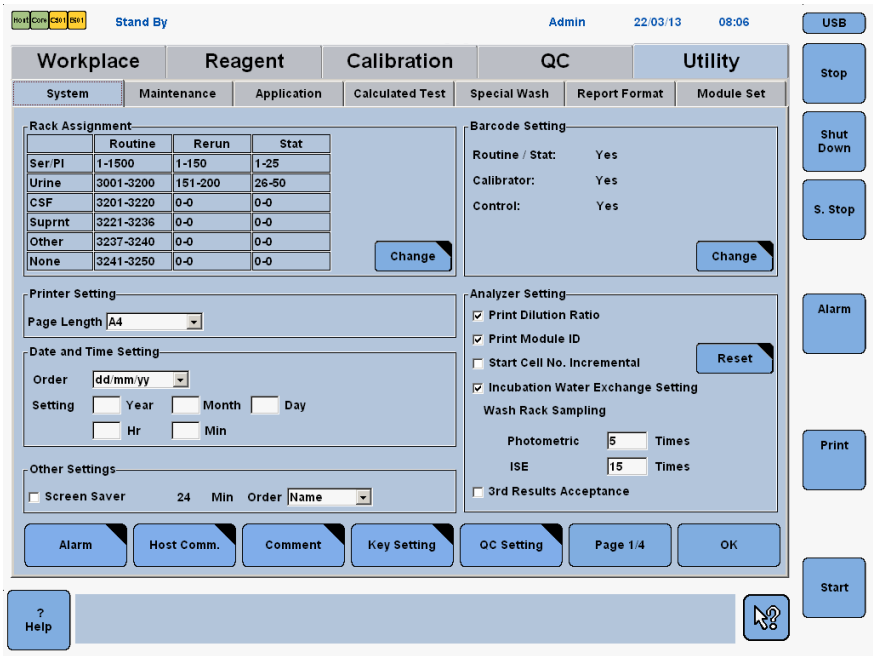

Figure B-138 Utility > System screen

For information about particular tasks associated with this screen, see *Programming system parameters* on page B-282.

Programming system parameters

Many system parameter settings can be customized according to your laboratory's needs. Your Roche service representative programs these according to your specifications during installation.

You can adjust the following system parameter settings.

Backup after programming system parameters

After (re)programming system parameters, it is strongly recommended that you make a backup disk. However, some items cannot be saved to disk.

See *Saving system parameters* on page B-314.

System parameter	screen/window
Assign Rack Numbers	Utility > System
Set the Printer Page Size	Utility > System
Set Date and Time	Utility > System
Set The Screen **Saver**	Utility > System
Order (Name/Test No.)	Utility > System
Set The Barcode Mode	Utility > System
Print Dilution Ratio	Utility > System
Print Module ID	Utility > System
Start Cell No. Incremental	Utility > System
Incubation Water Exchange Setting	Utility > System
Wash Rack Sampling	Utility > System
3rd Results Acceptance[(a)]	Utility > System
Define Alarm Settings	Utility > System (Page 1/4) > Alarm
Define Host Communication Settings	Utility > System (Page 1/4) > Host Comm.
Define Comment Titles	Utility > System (Page 1/4) > Comment
Assign Test Keys	Utility > System (Page 1/4) > Key Setting
Define Test Group Names	Utility > System (Page 1/4) > Key Setting
Add/Edit a Profile	Utility > System (Page 1/4) > Key Setting > Profile Setting
Define QC Settings	Utility > System (Page 1/4) > QC Setting
Activate Host Communication Setting	Start (global button)
Program Default Profiles	Start (global button) > Default Profile
Define Reagent Level Check Alarms	Utility > System (Page 2/4) > Reagent Level
Activate Calibration Mask Settings	Utility > System (Page 2/4) > Calib. Mask Setting
Define Maintenance Settings	Utility > System (Page 2/4) > Maintenance Setting
Define Pipe Settings	Utility > System (Page 2/4) > Pipe Setting
Define Power Up Pipe Settings	Utility > System (Page 2/4) > Power Up Pipe Setting
Assign Operator IDs	Utility > System (Page 3/4) > Operator ID Setting

Table B-33 System parameters (Sheet 1 of 2)

(a) This setting is read in case there is no sample information on the **Data Review** screen.

System parameter	screen/window
Define Check Digit Settings - Barcode Mode	Utility > System (Page 3/4) > Check Digit Setting
Define ISE Calib Setting	Utility > System (Page 3/4) > ISE Calib Setting
Define Rack Delivery Setting	Utility > System (Page 3/4) > Rack Delivery
(and Rack Reception Mode)	
Dilution And Cleaner Cassette Setting	Utility > System (Page 3/4) > Dil. + Cln.
Activate Automatic Printout	Utility > System (Page 4/4) > Automatic Printout
Download Setting	Utility > System (Page 4/4) > Download
Review By Exception	Utility > System (Page 4/4) > Review By Exception
Activate Automatic Rerun	Start (global button)
Set Alarm Sounds	Alarm (global button) > Sound
Application parameter	Read via Utility > Maintenance > Maintenance (Maintenance Type) > Parameter Read/Write
Compensated test parameter	
Calculated test parameter	
Manual test masking	
Carryover evasion setting	
Maintenance log setting	
Test assignment setting	
Scale setting of: • Calibration Trace window • Working Information window • Reaction Monitor window	

Table B-33 System parameters (Sheet 2 of 2)

(a) This setting is read in case there is no sample information on the **Data Review** screen.

Generating multiple results for a single test

It is always possible to generate 2 results for each test: 1st run and rerun. Select the **3rd Results Acceptance** check box on **Utility** > **System** to expand the ability to generate multiple results for a single test.

Description of 3rd Results Acceptance

When **3rd Results Acceptance** is activated, it is possible to request a test more than two times after confirming a safety warning. Any third or subsequent result will overwrite the previous rerun result.

The repeated rerun is only performed if the previous rerun result has been sent to the Host. In case the previous result is not transmitted prior to the repetition request, the sample is not pipetted.

Preconditions for 3rd Results Acceptance

Before activating **3rd Results Acceptance** it is necessary to check the following conditions.

► To activate 3rd Results Acceptance

1. Choose **Start** (global button) to open the **Start Conditions** window.
2. Verify if in the **Host Setting** area, that the Host communication is enabled. If not, choose **Change**, select the **Communication On** check box, and choose **OK**.

   If Host communication is not available, it is not possible to use **3rd Results Acceptance**.
3. Choose **Workplace** > **Data Review** > **Send To Host** and send all results to the Host. Then delete all data from the database by choosing **Delete All**.
4. Choose **Utility** > **System**.
5. Select the **3rd Results Acceptance** check box in the **Analyzer Setting** area.
6. Choose **OK** and confirm the warning message.

   With this confirmation you allow the system to overwrite rerun results by third and subsequent results.

■

Assigning tests or profiles to test keys

This section describes how to assign tests or profiles to a test key.

► To display the Key Setting window

1 Choose **Key Setting** on **Utility** > **System** (Page 1/4)

■

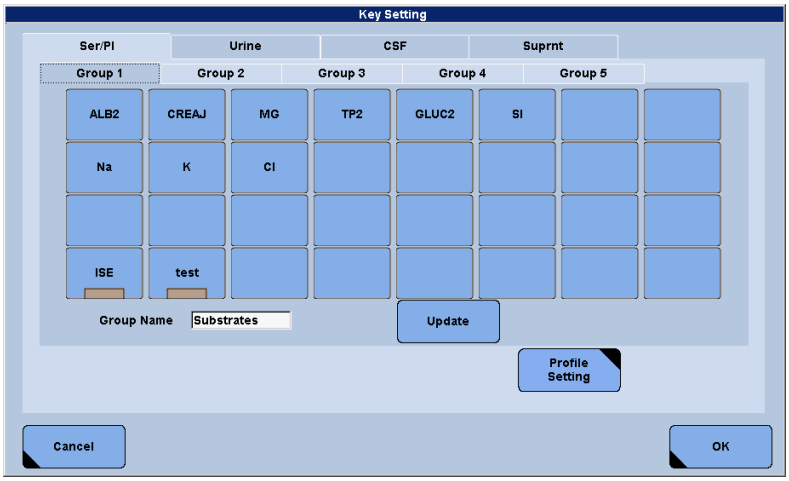

Figure B-139 Key Setting window

This window is used to assign tests or profiles to test keys. One test or profile can be assigned to each test key. Tests can be assigned for up to 5 groups of 32 keys per sample type. In total 160 test keys are available for each sample type.

► To define a group name

1 Choose the sample type tab, for example, Ser/PL

2 Select the **Group** tab (Group 1-5).

3 Type the name of the group in the **Group Name** box.

The group name can be defined individually, for example, hormones, thyroids, tumor marker. The name appears in the selected tab in the **Test Selection** window.

See *Test Selection screen* on page B-85.

■

► To assign a test or a profile to a key

1 Choose **Utility** > **System** (**Page 1/4**) > **Key Setting.**

2 Choose a key on the **Key Setting** window. The available tests and profiles are displayed.

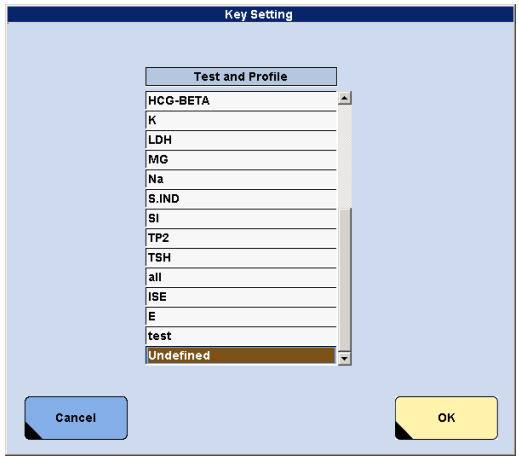

Figure B-140 Key Setting window

3 Select a test or a profile from the list and choose **OK**.

For defining a profile, see *To define a profile* on page B-287.

- If you want to delete a test key assignment, select **Undefined** at the end of the list.
- Only tests and profiles valid for the selected sample type are displayed.

4 Repeat step 2 and 3 to select a key for other tests.

5 Choose **Update** on the **Key setting** window to update the new information.

6 Then choose **OK** to close the window.

■

Key order and pipetting order (e 601)

If you request a sample with **e** 601 tests, the key order in the **Test Selection** screen defines the pipetting order of the tests. It starts from left to right, and from top to button.

If the samples are requested by a host, the host trace defines the pipetting order.

► To define a profile

Profiles are sample type specific, this means the sample type has to be selected.

1 Choose **Utility** > **System** (**Page 1/4**) > **Key Setting** > **Profile Setting.**

2 Choose the tab of a sample type, for example, **Ser/Pl**.

3 Choose **Profile Setting** on the **Key Setting** window. The **Profile Setting** window is displayed.

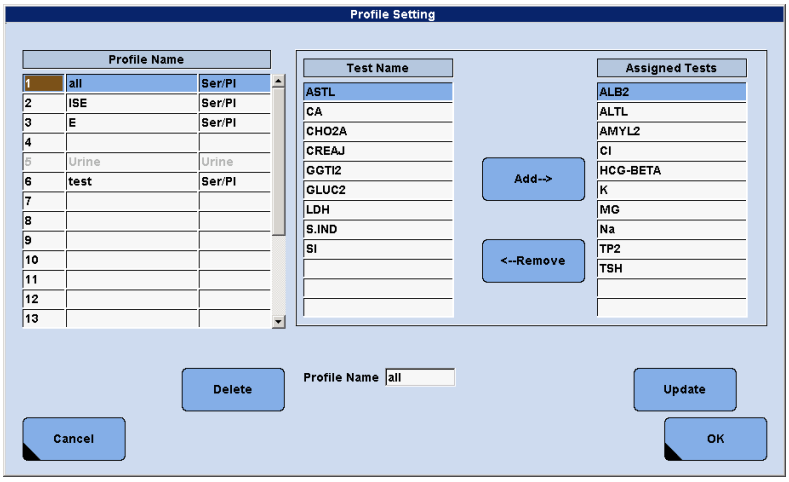

Figure B-141 Profile Setting window

A maximum of 20 profiles in total can be defined in the **Profile Name** list.

4 Select an empty line in the **Profile Name** list.

5 Type in the profile name in the **Profile Name** box.

6 Add the tests that should be included in the profile to the **Assigned Test** list.

When adding the serum index tests, (L, H, I) to a profile, select the **S.IND** test name. Do not add the SI2 or S-SI2 tests to a profile.

7 Choose **Update** to update the information and choose **OK** to save the profile settings.

8 If a profile is assigned to a key, the key on the **Test Selection** screen is marked with a brown bar.

■

Test order in profile and pipetting order (e 601)

If you request a profile with **e** 601 tests, the test order in the profile defines the pipetting order of the tests.

Maintenance / Pipe Setting / Power Up Pipe buttons

Configuration of maintenance related items is described in the corresponding maintenance chapters.

For information, see:
Defining and editing maintenance types on page C-19
Defining and editing maintenance pipes on page C-11
Power Up Pipe function on page C-15

Rack Delivery button

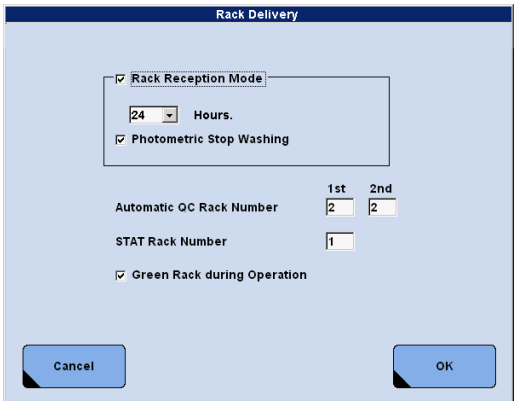

Figure B-142 Rack Delivery window

Use this window to make the following settings:

- Activate or cancel **Rack Reception** mode, set the time period. The following periods are available: **1**, **2**, **4**, **8**, **12** and **24 hours**.
- Activate or cancel **Photometric Stop Washing**.
- Set the number of rack rotor positions that are reserved for automatic QC and STAT racks

  See *Automatic QC* on page B-202.
- Activate or cancel **Green Rack during Operation**.

Rack Reception Mode

Select this check box to activate and configure the rack reception mode (RRM). When the rack reception mode is activated, you can choose this mode on the **Start Conditions** screen.

Use the **Hours** list box to specify the duration of the rack reception mode. The following periods are available: **1**, **2**, **4**, **8**, **12** and **24** hours. The count down for the remaining time starts, when the system changes from preparation to operation mode. The remaining time for RRM is shown in the status line.

For an analysis started without RRM, the system automatically turns to Stand By after the last available sample is processed.

For an analysis started with active RRM, the system remains in operation after the last available sample is processed and until one of the following occurs:

Action	Result
Specified time is elapsed	System goes into stand by
S.Stop button is chosen	System goes into stand by
Stop button is chosen	System goes into stand by
A red alarm is issued	System goes into stand by
A wash rack is loaded	The wash rack is processed and then the system goes into stand by (only if **Green Rack during Operation** is not selected)

Table B-34 Stopping the system in rack reception mode

If there are still samples to be processed after the RRM time has elapsed, the system finishes these samples and goes to Stand by afterwards.

If you want to stop the RRM before the specified time is elapsed, proceed as follows:

► To interrupt the Rack Reception mode

1. Choose **Start** (global button).
2. Choose **Change** in the **Rack Reception Mode** area.
3. Clear the R**ack Reception Mode** check box and confirm with **OK**.

   The **Rack Reception Mode** is stopped. The system goes into stand by after all samples in process are finished and the finalization is performed.
4. Choose **Cancel** to close the **Start Conditions** screen.

■

- The remaining time for RRM is shown in the status line.
- Changes to the duration of the rack reception mode can only be done in stand by.
- If an **e** 601 module was in rack reception mode or operation mode for 24 hours or more and has not been returned to stand by, initial bead mixing has to be performed. Initial bead mixing is carried out automatically after the module is started from stand by.
- The system goes into stand by after 24 hours if 24 hours is specified as the duration of the rack reception mode.

*Photometric Stop Washing (**c** 501)*

During operation and rack reception mode the reaction cells of the **c** 501 module are continuously washed. To disable the washing function, select the **Photometric Stop Washing** check box. In this case washing stops, after the last sample is processed.

Cell washing is automatically enabled when the next analysis is started.

This check box is available only if rack reception mode is selected.

Automatic QC Rack number / STAT Rack number

Set the number of slots for each rotor that will be reserved for **Automatic QC** and STAT racks during operation.

The reserved number of slots will be used by the automatic QC or STAT racks. The number of slots reserved for automatic QC should correspond with the specified rack range for automatic QC racks.

Positions for STAT racks in the rack rotor can be defined for the first rack rotor. The reserved rack positions for STAT racks in the second rack rotor cannot be defined. On this rack rotor one rack position is reserved for STAT racks per default.

See *Automatic QC* on page B-202.

At least one position should be reserved for a STAT rack if working with STAT samples

If no position is reserved for a STAT rack and all positions are occupied by other racks, the STAT rack cannot be processed until a rack is removed from the rack rotor.

Number of reserved rack positions

When working **with** automatic rerun reserve a maximum of 5 positions on the rack rotor for Auto QC samples and STAT samples.

When working **without** automatic rerun reserve a maximum of 10 positions on the rack rotor for Auto QC samples and STAT samples.

When working with Auto QC racks reserve at least two positions for Auto QC racks on the second rack rotor.

Green Rack during Operation

⚠ CAUTION

Incorrect results due to wrong calibration

After processing a green wash rack all ISE tests must be calibrated.

- P-mask the ISE before running the green wash rack during operation.

For information about P-masking, see *T-masking and P-masking* on page B-241.

- Do not load samples with ISE requests before you have checked the calibration and QC results for ISE.

Select this check box to activate the **Green Rack during Operation** function. When this function is activated, you can load a green wash rack during operation. The analyzer will not go into stand by after processing of the green wash rack. Therefore a continuous processing of samples is possible.

See *Processing green wash rack* on page C-73.

Module Set

This section explains how to perform certain tasks associated with entire modules rather than specific samples or tests.

Refer to the following procedures to get information about:
Assigning a test to a module on page B-292
Inactivating a module on page B-294

The entire module set (module configuration, test assignment) should be performed before the other settings (control, calibrator settings)

To display this screen, choose **Utility** > **Module Set**.

This screen can be accessed by an operator with administrator level password only.

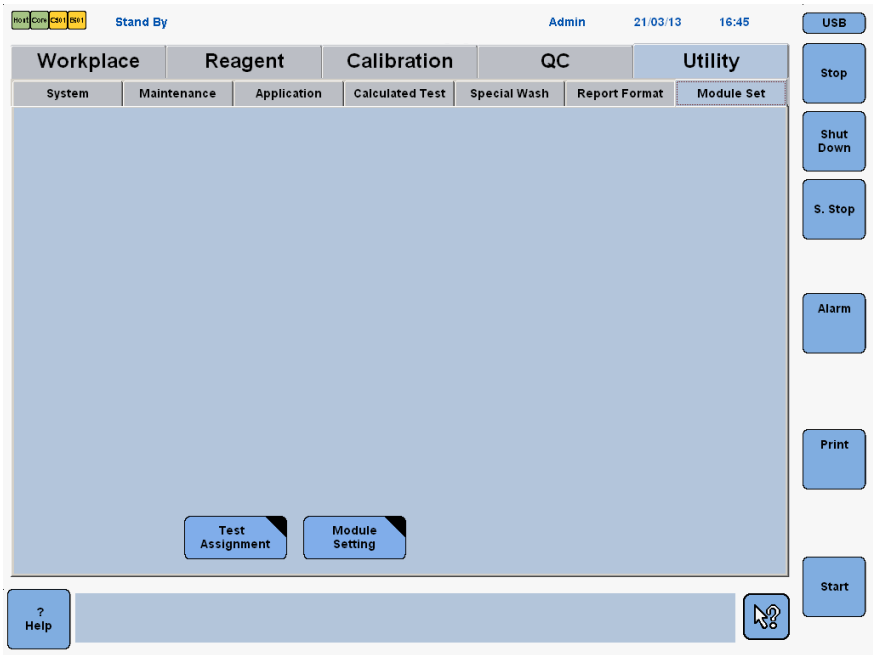

Figure B-143 Utility > Module Set screen

This screen is used to access the **Module Configuration**, **Test Assignment** and **Module Setting** windows

Assigning a test to a module

This section describes how to assign a test to a module.

► To assign a photometric or an ISE test to a c 501 module

1 Choose **Test Assignment** on the **Utility** > **Module Set** screen.

2 Choose the button of the **c** 501 module to which you want to assign the test. The module specific Test Assignment window is displayed.

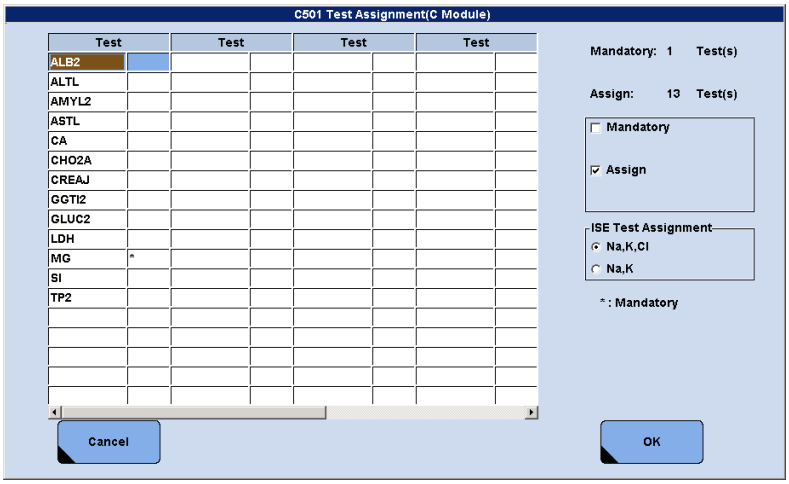

Figure B-144 Test Assignment window – **c** 501

3 Select a test in the **Test** list of the **Test Assignment** window.

4 Select the **Assign** check box.

5 Select the **Mandatory** check box if the reagent has to be on board all the time.

If the **cobas c** pack of a mandatory test is not available on the system, the corresponding module is displayed in red on the **System Overview** screen. Nevertheless operation of the module can start (in contrast to the **e** 601 module).

6 Select **Na, K, Cl** or **Na, K**.

- **Na, K, Cl**: This option allows sodium (Na^+), potassium (K^+) and chloride (Cl^-) ion testing on this ISE module.
- **Na, K**: This option allows only sodium (Na) and potassium (K) testing on this ISE module.

7 Choose **OK**.

■

Installation of an application

For continuing the application installation, download the calibrator data from **cobas** link.

See *Downloading or updating calibrator data* on page B-188.

► To assign a test to an e 601 module

1 Choose **Test Assignment** on the **Utility** > **Module Set** screen.

2 Choose the button of the **e** 601 module to which you want to assign the test. The module specific **Test Assignment** window is displayed.

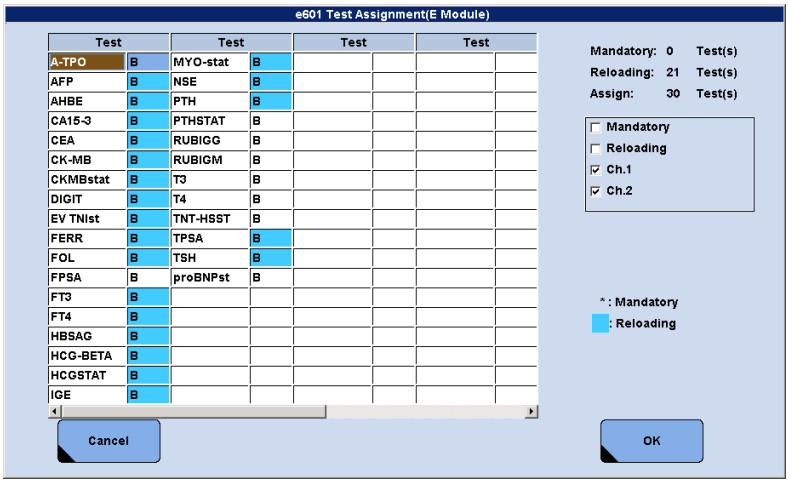

Figure B-145 Test Assignment window – **e** 601

3 Select a test in the **Test** list of the **Test Assignment** window. Check either the **Ch.1**, **Ch.2** or both check boxes to assign the test to measuring channel 1, 2, or both respectively.

A test that is not assigned to any of the channels must not be loaded on the system.

4 Select the **Mandatory** check box if the reagents for the selected test must be available on the module all the time.

If the **cobas e** pack of a mandatory test is not available on the system, the corresponding module is displayed in red on the **System Overview** screen and operation of the analyzer cannot start (in contrast to the **c** 501 module).

5 The **Test** list is updated immediately.

Unassigned tests are grayed out. Tests assigned to an **e** 601 module are followed by a **1**, **2** or **B** indicating they have been assigned to measuring channel 1, 2 or both.

6 Select the **Reloading** check box in order to initiate the reloading process if the selected test runs out of reagent during operation.

For more information, see *Reagent reloading (e 601)* on page B-133.

7 Choose **OK**.

■

Installation of an application

For continuing the application installation, download the calibrator data from **cobas** link.

See *Downloading or updating calibrator data* on page B-188.

Inactivating a module

Use this procedure to inactivate one or more modules. A module cannot perform any automated maintenance functions when it is inactive.

The system must be in stand by to activate or inactivate a module.

► To inactivate a module

1 Choose **Module Setting** on the **Utility** > **Module Set** screen.

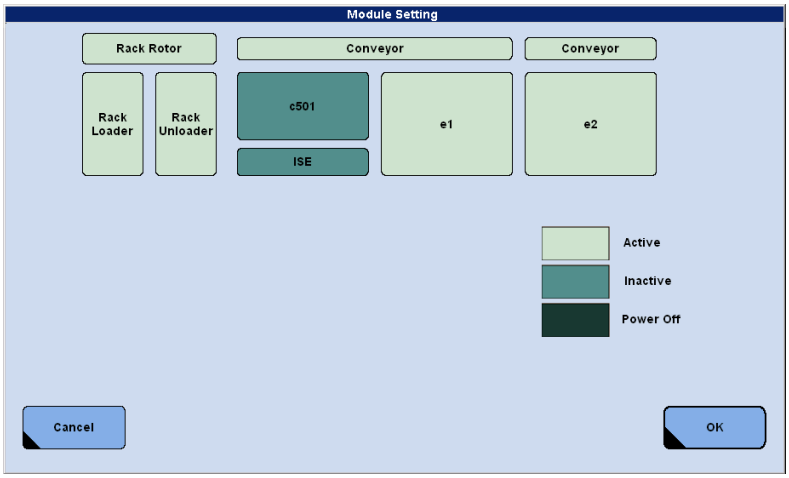

Figure B-146 Module Setting window

This window is used to activate/deactivate or power off modules.

The window displays a system layout diagram from which the module to be activated or deactivated is selected. Choosing a module changes its state successively from active, to inactive, to power OFF, and back. The current status of the module is shown by different colors explained on the window.

2 Choose the appropriate module to toggle between **Active**, **Inactive**, and **Power Off**.

3 Choose **OK** and confirm with **Yes** to apply the assigned settings.

■

If you want to use the **Backup Operation** function, you have to inactivate the rack rotor.

For more information about the **Backup Operation** function, see *Backup operation* on page B-244.

Calculated Tests (c 501)

This section explains how to program calculated tests and compensated tests.

Calculated tests and compensated tests can be programmed for **c** 501 tests only.

To display this screen choose **Utility** > **Calculated Test**.

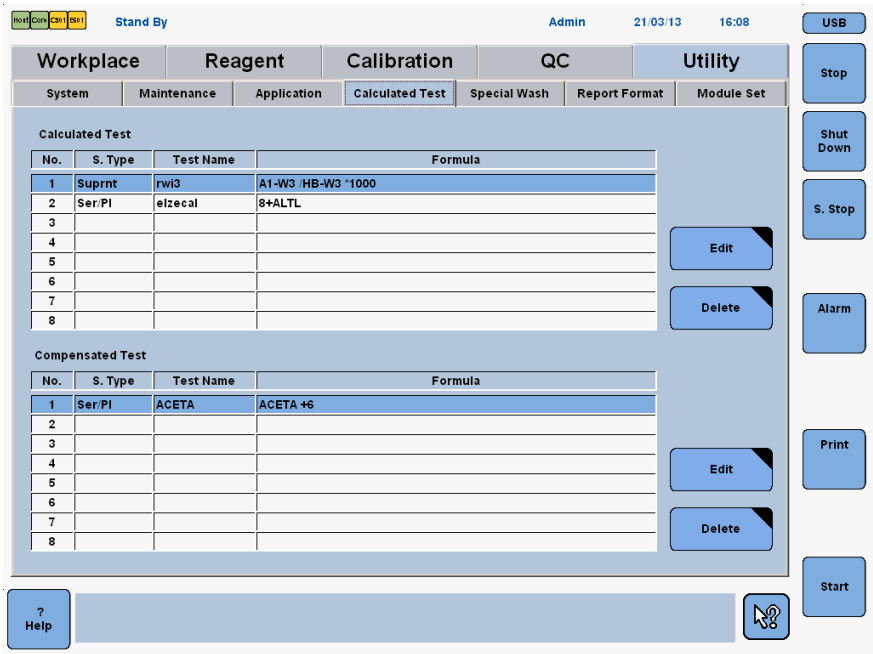

Figure B-147 Calculated Test screen

Programming calculated tests

Calculated test results are not performed on the system but are derived from applying a test formula to the results of clinical chemistry tests performed on the system.

Display of calculated test results

If the conditions for a calculated test are fulfilled, then an additional result is displayed for this sample in the test results list of the **Data Review** screen. The **Test** name for the calculated test in the test results list is the short name defined in the **Item** box. If test data to be used in the calculation is unavailable, the program does not perform the calculation.

In contrast to this the compensated tests overwrites an available result for sample.

Editing of calculated test results

Calculated test results cannot be edited.

QC of calculated tests

A calculated test will be automatically added to the installed controls in **QC** > **Install** screen. The QC result for the calculated test is visible on the **QC** > **Individual** screen and **Individual QC Chart**.

For more information, see:
QC Install screen on page B-224
QC Individual screen on page B-213

Real Time QC and **QC Run Status** is not available for calculated tests.

► To program a calculated test and enter a calculated test formula

1. Choose **Utility** > **Calculated Test**.
2. Select an empty line from the **Calculated Test** list at the top of the screen.
3. Choose **Edit**. The **Calculated Test Formula** window is displayed.

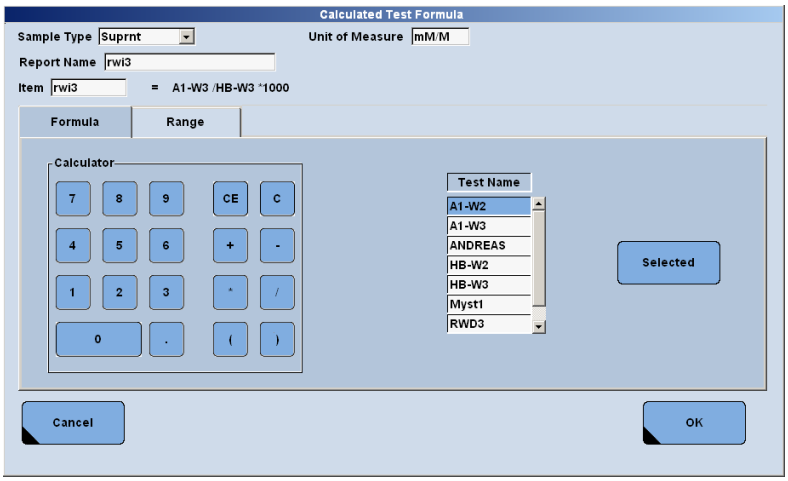

Figure B-148 Calculated Test Formula window

4. Select the type of sample (**Ser/Pl**, **Urine**, **CSF**, **Suprnt**) for which the calculated test formula is being created from the **Sample Type** list.
5. Type the unit of measure in the **Unit of Measure** box.
6. Type a name for the calculated test as it should appear on the report in the **Report Name** box.

7 Type the short name of the calculated test in the **Item** box.

Only alphabetic and numerical characters can be used.

8 Enter the formula (the formula appears to the right of the **Item** text box, after the equal sign):

- To add a test to the formula, select the test that is part of the formula from the **Test Name** list and choose **Selected**.
- To add mathematical operators and numerals, use the **Calculator** area in the window to enter these in the correct sequence along with test names until the formula is complete.

9 Now, set the range parameters.

■

► To set range parameters

1 Choose the **Range** tab.

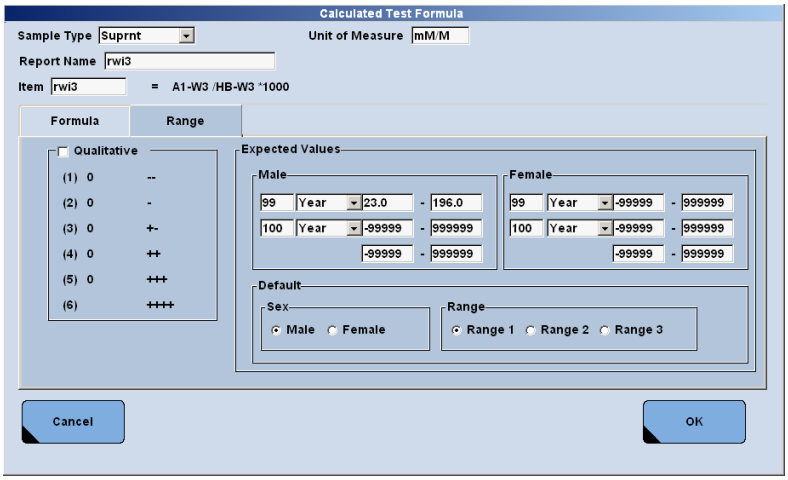

Figure B-149 Calculated Test Formula - Range tab

2 Type the expected value ranges or the qualitative parameters in the **Range** area, if needed. Select the **Default** setting, if needed.

3 Choose **OK** to save the new formula and close the **Calculated Test Formula** window. The new formula is shown in the **Calculated Test** list box at the top of the **Calculated Test** screen.

The number of digits displayed to the right of the decimal in the calculated test result is determined by the number of digits entered to the right of the decimal for the first Male Expected Value field on the **Range** tab of the **Calculated Test Formula** window.

4 Choose **Utility** > **Report Format**.

5 Select the defined test in the **Print Order** area.

6 Type an unused line number into the **Line** field.

7 Choose **Update** and **Save** to save the changes.

■

► To edit a calculated test formula

If a calculated test formula is edited, the calculated test result displayed on **Data Review** is modified.

1. Choose **Utility** > **Calculated Test**.
2. Select the calculated test formula to be edited from the **Calculated Test** list box at the top of the screen.
3. Choose **Edit** to display the **Calculated Test Formula** window.
4. Use **C** in the **Calculator** area of the window to clear the entire formula or **CE** to clear components of the formula one at a time from right to left.
5. Enter the formula (the formula appears to the right of the **Item** text box, after the equal sign):
   - To add a test to the formula, select the test that is part of the formula from the **Test Name** list and choose **Selected**.
   - To add mathematical operators and numerals, use the **Calculator** area in the window to enter these in the correct sequence along with test names until the formula is complete.
6. Choose the **Range** tab. Type the expected value ranges or the qualitative parameters in the **Range** area, if needed. Change the **Default** settings, if needed.
7. Choose **OK** to save the formula programming and close the **Calculated Test Formula** window. The revised formula appears in the **Calculated Test** list box at the top of the **Calculated Test** screen.

■

► To delete a calculated test formula

1. Choose **Utility** > **Calculated Test.**
2. In the **Calculated Test** list box, select the calculated test to be deleted.
3. Choose **Delete** to the right of the **Calculated Test** list box. A confirmation window appears.
4. Choose **Yes** to delete the calculated test and close the window.

■

Programming compensated tests

Clinical chemistry test results can be processed on the system and adjusted by applying a compensated test formula. Use the following procedures to add, edit or delete a compensated test formula.

► To enter a compensated test formula

1 Choose **Utility** > **Calculated Test**.

2 Select an empty line in the **Compensated Test** list box at the bottom of the screen.

3 Choose **Edit** to display the **Compensated Test Formula** window.

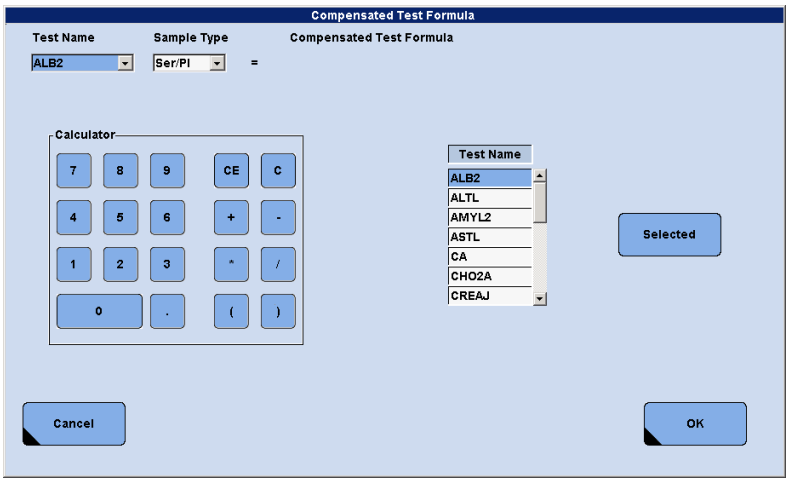

Figure B-150 Compensated Test Formula window

4 Select the test and sample type to be compensated from the **Test Name/Sample Type** list box in the upper left corner of the window.

5 Enter the formula (the formula appears to the right of the **Sample Type** list box, after the equal sign):

- To add a test to the formula, select the test that is part of the formula from the **Test Name** list and choose **Selected**.
- To add mathematical operators and numerals, use the **Calculator** area in the window to enter these in the correct sequence along with test names until the formula is complete.

6 Choose **OK** to save the new formula and close the **Compensated Test Formula** window. The new formula is shown in the **Compensated Test** list box at the bottom of the **Calculated Test** screen.

■

► To edit a compensated test formula

1. Choose **Utility** > **Calculated Test**.
2. Select the compensated test formula to be edited from the **Compensated Test** list.
3. Choose **Edit** to display the **Compensated Test Formula** window.
4. Choose **C** in the **Calculator** area of the window to clear the entire formula, or **CE** to clear components of the formula, one at a time, from right to left. Use the **Test Name** list to select any test that is part of the formula. Choose **Select** after selecting the test to add it to the formula, which is shown at the top of the window. Use the **Calculator** area to enter mathematical operators and numerals in the correct sequence with test names.
5. Choose **OK** to save the formula programming and close the **Compensated Test Formula** window. The revised formula appears in the **Compensated Test** list box at the bottom of the **Calculated Test** screen.

■

Even if a compensated test formula is edited, the already calculated test result displayed on **Data Review** is not modified.

► To delete a compensated test formula

1. Choose **Utility** > **Calculated Test**.
2. Select the compensated test formula to be deleted from the **Compensated Test** list.
3. Choose **Delete**. A confirmation window is displayed.
4. Choose **Yes** to delete the compensated test and close the window.

■

Special Wash

The **cobas** 6000 analyzer series is a random access system. Therefore, reagent probes and reaction cells may cause carryover and thus interferences between tests, and the sample probe may cause sample carryover.

To avoid carryover and cross-contamination between tests use the special wash function. This function allows you to preset combinations of reagents or samples that may cause carryover so that washing will be carried out between them when the combination is encountered during analysis.

The following sections explain how to set the carryover avoiding function:
Programming a special wash for c 501 modules on page B-301
Programming a special wash for e 601 modules on page B-308

Programming a special wash for c 501 modules

Reagent probe, sample probe or cell washes may be required due to potential interference from other reagents or samples. These special washes maintain reagent and sample integrity.

A current carryover prevention list is available on **cobas** link. Refer to the instructions for use for NaOH-D / SMS / Sample Cleaner 1 or 2 / SCCS.

Reagent probe wash

The reagent probes dip into the reagents when aspirating. To evade a reagent carryover, program a special wash cycle for the reagent probe.

► To program a reagent probe wash

1 Choose **Utility** > **Special Wash** > **Chemistry**.

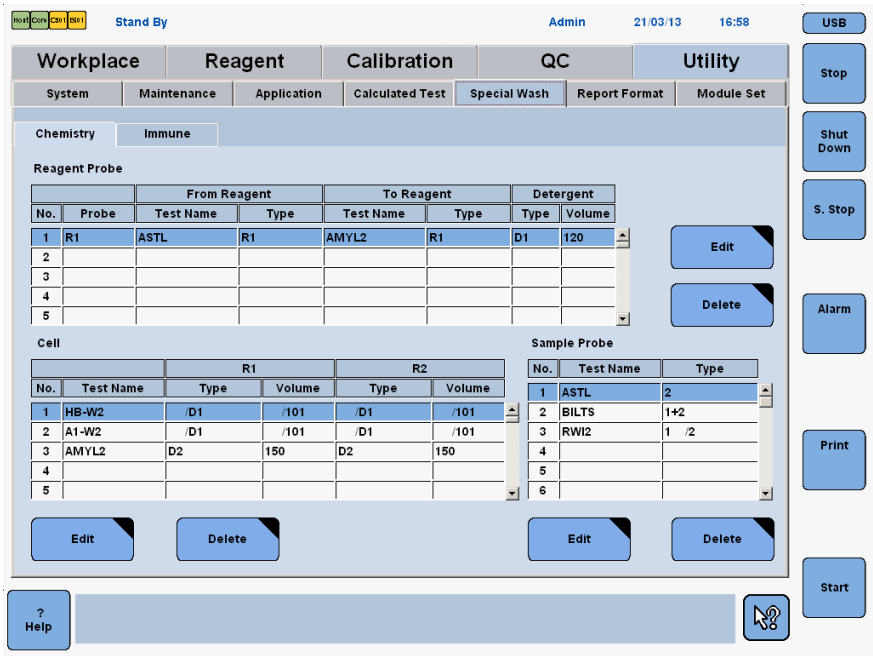

Figure B-151 Special Wash > Chemistry tab

2 Select an empty line in the **Reagent Probe** list to add a reagent probe wash. To edit an existing reagent probe wash, select the corresponding line

3 Choose **Edit**, on the right of the **Reagent Probe** area, to display the **Edit Reagent Probe Wash** window.

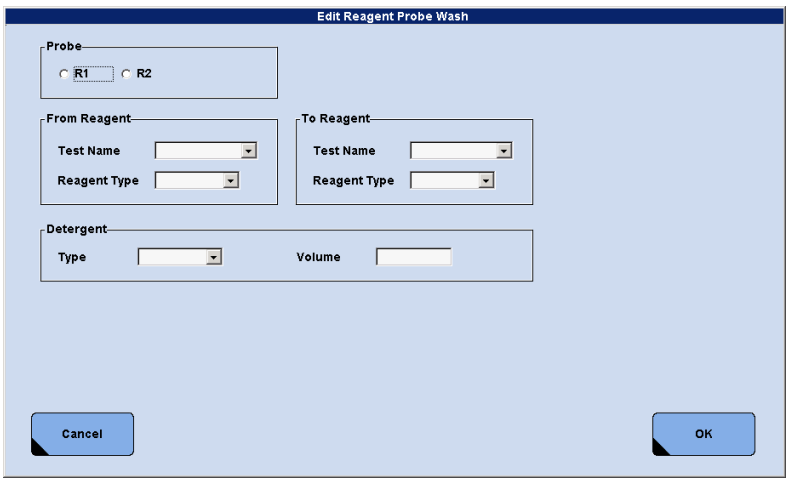

Figure B-152 Edit Reagent Probe Wash window

4 In the **Probe** area, choose **R1** or **R2** to designate which reagent probe is to be washed.

5 In the **From Reagent** area you have to make the settings for the test from which contamination could be carried over to another test.

- Select the name of the test from the **Test Name** list box. If you select **All Items**, the reagent probe is always washed if the selected test in the **To Reagent** area is pipetted afterwards.
- Select the appropriate reagent type (**R1**, **R2**, or **R3**) in the **Reagent Type** list box.

Individual wash steps must be programmed before the **all tests** wash steps.

6 In the **To Reagent** area you have to make the settings for the test to which contamination could be carried over from another test.

- Select the name of the test from the **Test Name** list box. If you select **All Items**, the reagent probe is always washed if the selected test in the **From Reagent** area was pipetted before.
- Select the appropriate reagent type (**R1**, **R2**, or **R3**) in the **Reagent Type** list box.

7 In the **Detergent Type** list box select the detergent used for washing.

These solutions are used for washing the reagent probe of the **c** 501module.

- D1 (NaOH-D)
- D2 (SMS)
- D3 (SCCS)
- Water

8 Then type the wash solution volume (from 20 to 180 µL) in the **Volume** text box.

9 Choose **OK** to add the new special wash to the list on the **Special Wash** screen and close the window.

10 Check the amount of the appropriate detergent cassette on the instrument on the **Reagent** > **Status** screen

■

► To delete a reagent probe wash

1 Choose **Utility** > **Special Wash** > **Chemistry**.

2 Select the line in the **Reagent Probe** list to be deleted.

3 Choose **Delete** located on the right of the **Reagent Probe** area to delete the reagent probe wash after confirmation.

■

Cell wash

To evade the carryover of traces of the test mixture of one test to the next test measured in that same reaction cell, program a special wash cycle for the reaction cell. In this case a special wash is carried out *before* the corresponding test is performed.

For the HbA1c application (HB-W3, A1-W3) this window shows the **After Sampling** area additionally. In this area you can define special washes for the reaction cell in which the HB-W3 test or the A1-W3 test was performed. In this case a special wash is carried out *after* the corresponding test was performed.

► To program a cell wash

1. Choose **Utility** > **Special Wash** > **Chemistry**.
2. Select an empty line in the **Cell** list to add a cell wash. To edit an existing cell wash, select the corresponding line.
3. Choose **Edit** located below the **Cell** area to display the **Edit Cell Wash** window.

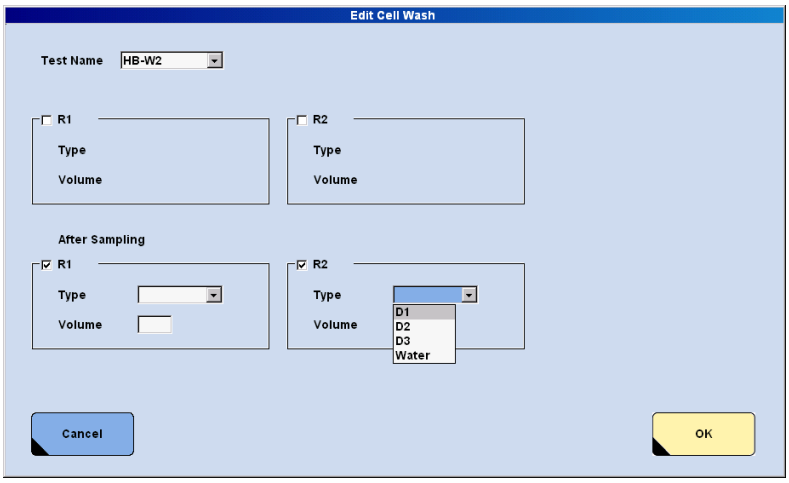

Figure B-153 Edit Cell Wash window

4. Select a test from the **Test Name** list box that may cause carryover.
5. Designate the reagent probe(s) (**R1** or **R2**) that will dispense the detergent by choosing the **R1** and/or **R2** check boxes.
6. In the **Type** list box select the detergent used for washing.

   These solutions are used for washing the cells of the **c** 501module.

   - D1 (NaOH-D)
   - D2 (SMS)
   - D3 (SCCS)
   - Water

7 Type the cell wash solution volume (from 20 to 180 µL) in the **Volume** text box for each reagent probe selected.

After Sampling area

For the HbA1c application this window shows the **After Sampling** area additionally. In this area you can define special washes for the hemolysate reaction cell. In this case a special wash is carried out after the corresponding test was performed.

8 Choose **OK** to save the settings, add the programming to the **Cell** list box and close the window.

9 Check the amount of the appropriate detergent cassette on the instrument on the **Reagent** > **Status** screen.

■

► To delete a cell wash

1 Choose **Utility** > **Special Wash** > **Chemistry.**

2 Select the test to be deleted from the **Cell** list.

3 Choose **Delete** located below the **Cell** list box to delete the cell wash after confirmation.

■

Sample probe wash

The sample probe dips into the sample when it aspirates sample liquid. To evade a carryover of sample liquid into a test that is sensitive for sample residual, program a special wash cycle for the sample probe.

► To program sample probe wash

1. Choose **Utility** > **Special Wash** > **Chemistry**.
2. Select an empty line in the **Sample Probe** list to add a sample probe wash. To edit an existing sample probe wash, select the corresponding line.
3. Choose **Edit** located below the **Sample Probe** area to display the **Edit Sample Probe Wash** window.

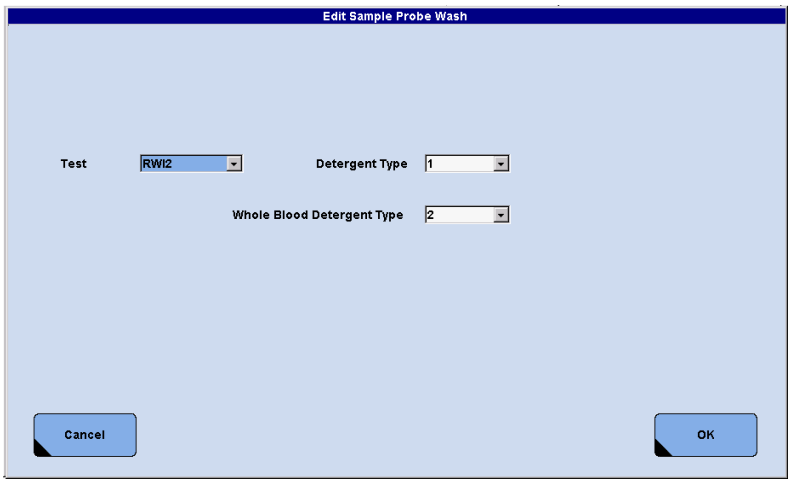

Figure B-154 Edit Sample Probe Wash window

4. Select a test from the **Test** list box that is sensitive for sample residual.
5. In the **Detergent Type** list box select the detergent used for washing.

   These solutions are used for washing the sample probe of the **c** 501module.

   - 1 (Sample Cleaner 1)
   - 2 (Sample Cleaner 2)
   - 1+2 (Sample Cleaner 1 + Sample Cleaner 2)
   - Water

   The detergent aspiration volume is 45 µl
6. Choose **OK** to save the settings.

When a sample probe wash is performed prior to sample aspiration for a sample, a *b* appears in the status column on **Workplace** > **Data Review**. The solutions used to clean the sample probe are listed in the **Carryover Evasion** field on the **Workplace** > **Data Review** > **Test Review** screen.

7 Check that the appropriate wash solution is placed on the instrument in the correct position.

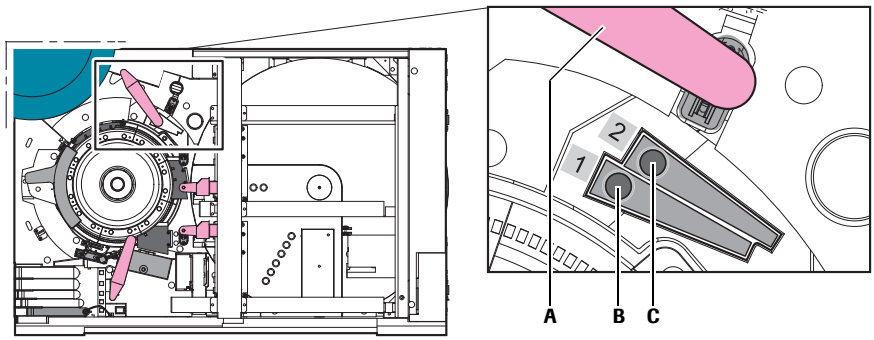

A Sample Probe **B** (1) Sample Cleaner 1 **C** (2) Sample Cleaner 2

Figure B-155 Sample probe cleaners

8 Check the amount of the appropriate detergent on the **Reagent** > **Status** screen.

■

► To delete a sample probe wash

1 Choose **Utility** > **Special Wash** > **Chemistry**.

2 Select the test to be deleted from the **Sample Probe** list.

3 Choose **Delete** located below the **Sample Probe** list to delete the sample probe wash after confirmation.

■

Programming a special wash for e 601 modules

Use special wash programs for the **e** 601 reagent probe to avoid potential carryover of reagents to other assays. Special washes maintain reagent and sample integrity.

Reagent probe wash

Heterogeneous immunoassays are very sensitive tests. Some combinations of these assays are especially sensitive against carryover within the **e** 601 module. To prevent such carryover, program a special wash cycle of the reagent probe.

► To program a reagent probe wash

1 Choose **Utility** > **Special Wash** > **Immune**.

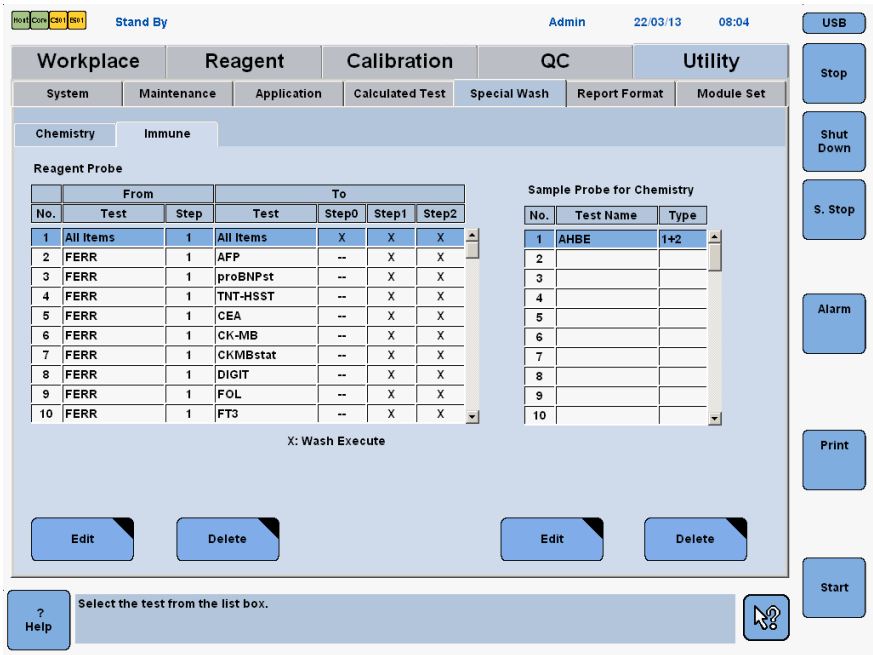

Figure B-156 Special Wash > Immune tab

2 Select an empty line in the **Reagent Probe** list to add a reagent probe wash. To edit an existing reagent probe wash, select the corresponding line.

3 Choose **Edit** located below the **Reagent Probe** area to display the **Edit Reagent Probe Wash** window.

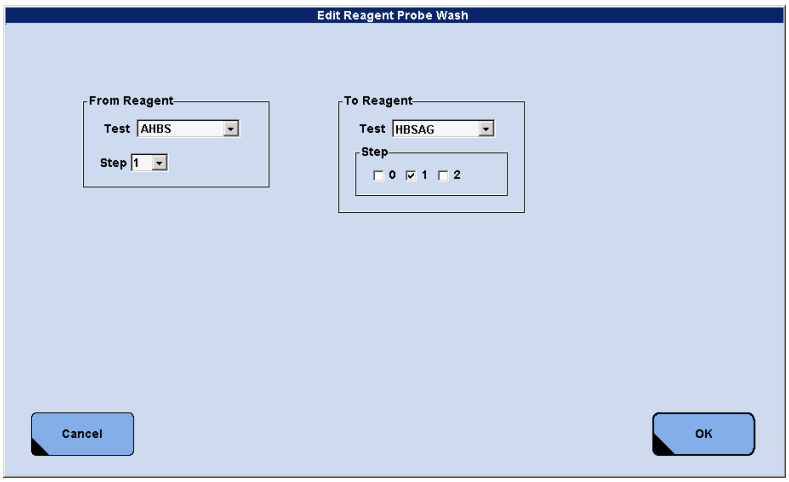

Figure B-157 Edit Reagent Probe Wash window

4 In the **From Reagent** area you have to make the settings for the test from which contamination could be carried over to another test.

- Select the name of the test from the **Test** list box. If you select **All Items**, the reagent probe is always washed if the selected test in the **To Reagent** area is pipetted afterwards.
- Select the pipetting step (**0**, **1** or **2**) from the **Step** list box.
  - Step 0 is used for pretreatment or diluent.
  - Step 1 is the pipetting step before the first incubation.
  - Step 2 is the pipetting step before the second incubation.

5 In the **To Reagent** area you have to make the settings for the test to which contamination could be carried over from another test.

- Select the name of the test from the **Test** list box. If you select **All Items**, the reagent probe is always washed if the selected test in the **From Reagent** area was pipetted before.
- Select which pipetting steps are affected (**0**, **1** or **2**) from the **Step** check boxes.

6 Choose **OK** to save any changes made.

■

Sample probe wash

In the context of **e** 601 special wash, the term *sample probe* refers to the sample probe of the **c** 501, not to the **e** 601 sample probe.

Prior to pipetting the **c** 501 test, the sample probe of the **c** 501 is washed with the specified detergent if afterwards the **e** 601 test (specified on the **Edit Sample Carry Over Evasion** window) is requested.

If a sample has been processed on **c** 501 before an **e** 601 assay is performed and a special wash for the sample probe of the **c** 501 has been performed, a b-flag is added to the result on the **Data Review** screen.

For more information on programming a sample probe wash, see *To program sample probe wash* on page B-306.

Report Format

This section explains how to customize the report format of the patient report.

The patient report (**Print** (global button)> **Work Place**> **Data Monitor/Report**) can be printed in two formats: **Monitor** format or **Report** format. Only the **Report** format can be customized.

Customizing patient report format

This section describes how to customize the patient report format.

► To customize patient report format

1 Choose **Utility** > **Report Format**.

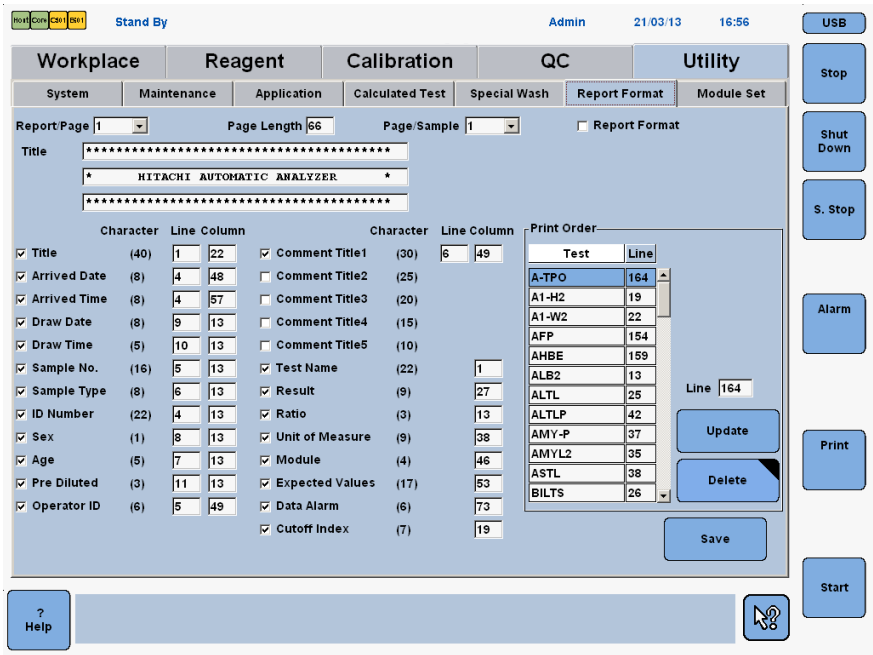

Figure B-158 Report Format screen

Customizing the report format of the patient report consists of the following steps:

- Choose the page layout.
  To choose the page layout on page B-311
- Define the title, the positions of all other items, and the print order.
  To define the title and the positions of all other items on page B-311
- Choose **Save** to save the changes.

■

► To choose the page layout

1. Select the number of reports per page (**1** or **2**) from the **Report/Page** list.
2. Type the page length in lines in the **Page Length** box.
   - for US letter (8 1/2 " x 11") type 66
   - for A4 (21cm x 29.7 cm) type 72
3. Select the number of pages per sample (**1** or **2**) from the **Page/Sample** list.
4. Select the **Report Format** check box to print patient reports in report format or deselect it to print in monitor format.

   If automatic printout is activated (**Utility** > **System** (Page 4/4) > **Automatic Printout**) the patient report (only STAT samples) is printed in the selected format (report format or monitor format).

   If you print the patient report from the **Data Monitor/Report** screen (**Print** (global button)> **Work Place**> **Data Monitor/Report**) you can select the format regardless of the setting on the **Report Format** screen.

   Results with exception data alarms (**Utility** > **System** (**Page 4/4**) > **Review By Exception**) are not printed in the report format.

■

► To define the title and the positions of all other items

1. Type the title to be used for the report header (up to 3 lines of 40 characters each) in the **Title** text boxes.
2. Assign a print line and column to each of the items of report information, as appropriate.

■

When assigning a print column, allow for the maximum character length for the item if assigning more than one demographic item to a line. For example, if the arrived date is assigned to line 4, column 47 and the arrived time is also assigned to line 4, it must be assigned to column 56 or higher since the character length for the arrived date is 8. If the second item is assigned to a column that is used by the first item, one of the items does not print or only partially prints.

► To alter the print order

Results may not be displayed

If no print order is defined, the result is not printed out or displayed in the **Print/View** screen, although the test itself is measured. If a print order is assigned to a line already used, the result may be overwritten by the other information.

- For each test, a print order number has to be defined.
- The setting of print order corresponds to the test order in the printout. Ensure that print order lines are not used from the information fields.

1 In the **Print Order** area, select the test from the list.

2 Type the line number on which the test is to print in the **Line** text box.

Results may not be displayed

Do not assign the same print line number to a test that is assigned to any demographic information in step 1 from To define the title and the positions of all other items.

3 Choose **Update** to update the print order information.

4 Choose **Save** to save the changes.

■

To check the report setup, print a report example from **Print** (global button) > **Utility** > **Report Example**.

Comparison of data monitor format and report format

This section compares the data monitor format with the report format.

Data Monitor/Report (monitor format)

```
                                  Data Monitor                      19/07/08       16:30

 Ser/Pl      N          00014-2                  000434
 19/07/08           CREA (C)        ALB2 (C)        CHOL (C)          TG (C)         TP2 (C)
 16:15:44           6.76            3.27             186             194            80.0
    admin                          >Test

                HCG-BETA (E-1)       TSH (E-2)
                   33,00            1,00
```

Figure B-159 Data Monitor report (monitor format)

Data Monitor/Report (report format)

```
                        *********************************************
                        *          HITACHI AUTOMATIC ANALYZER    *
                        *********************************************

 ID                                 000434 DATE         18/09/08    17:05:23
 S.NO.            N       00014-2           OPERATOR ID       admin
 S.TYPE           Ser/Pl                    Name
 AGE
 SEX
 DRAW DATE
 DRAW TIME
 PPEDILUTED       NO
 TEST             RATIO   COI/MES    RESULT  UNIT        MODULE        EXPECTED VALUE    ALARM
 TOTAL PROTEIN                         49.6  g/dL        C             ( -99999- 999999)
 Chol                                   174  mg/dL       C             ( -99999- 999999)
 Crea                                  1.18  mg/dL       C             ( -99999- 999999)
 Na                                     125  mmol/L      C             ( -99999- 999999)
 K                                      3.5  mmol/L      C             ( -99999- 999999)
 Cl                                      87  mmol/L      C             ( -99999- 999999)
 ALB                                     33  g/L         C             ( -99999- 999999)
```

Figure B-160 Data Monitor report (report format)

For more information, refer to the Online-Help information of the Data Monitor/Report.

Saving system parameters

Use the following procedure to make a backup of system parameters. This information can be restored by using the **Parameter Read** option in the **Parameter Read/Write** window, if required.

See *Restoring system parameters* on page B-316.

► To save system parameters on a storage medium

1. Wait until the system is in standby.
2. Insert a storage medium into the control unit computer.
   - Floppy disk: New, blank floppy disk (3.5", 1.44 MB, formatted, PC compatible)
   - DVD disk: A prepared DVD disk.
   - USB storage devices: A tested and installed USB storage device
3. Choose **Utility** > **Maintenance**.

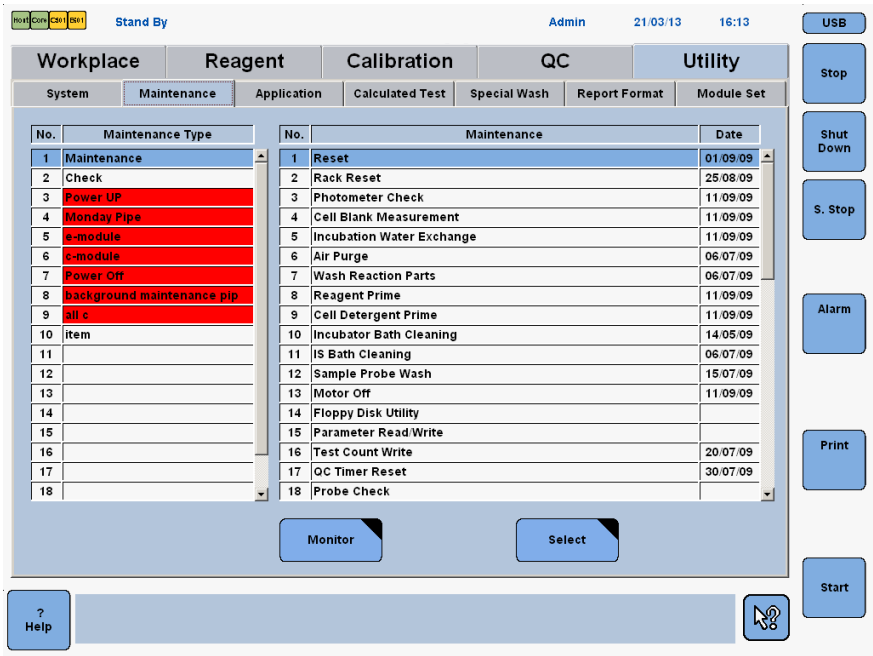

Figure B-161 Maintenance screen

4. Select **Maintenance** from the **Maintenance Type** list.
5. Select **(15) Parameter Read/Write** from the **Maintenance** Items list.
6. Choose **Select** to display the **Parameter Read/Write** window.

7 Select the required storage medium in the **Media** area.

Option	Description
Floppy Disk	Select this option to write the data to a floppy disk.
Mass Storage	Select this option to write the data to a mass storage. If a **USB** storage device is inserted, the instrument uses the USB as mass storage. If no USB storage device is inserted, the instrument uses a DVD disk as mass storage.

Table B-35 Media area

8 Select the **Parameter Write** option in the **Function** area and choose **Execute** to save parameters to storage medium after confirmation.

9 When processing is complete, eject the storage medium from the control unit computer and set aside for use later in this procedure.

For ejecting a USB storage device, see *Using a USB storage device* on page B-251.

The following system information is written:

Application settings [(a)]	Test registration number settings
Calculated and compensated test settings	Special wash settings
Report format settings	Module settings
System settings	Test assignment settings
Host communication settings	Rack assignment settings
Key settings	Host test code settings
Reagent level check settings	Profile settings
Maintenance pipe settings	Maintenance settings
ISE calibration settings	Power up pipe settings
Start condition settings	Review by exception settings
Scale settings for each graph	Test masking settings

Table B-36 System parameters stored by Parameter Read/Write function

(a) The units of an **e** 601 application are always the default ones. The units have to be manually edited after reading in the data from the disk.

10 Write the software version and the system configuration on the storage medium.

For more information about the software version, see *(1) Check Disk* on page C-43.

■

Restoring system parameters

Use the following procedure to restore system parameters from a storage medium.

System configuration and software version

Do not restore system parameters on systems with a different configuration. e.g from a ce combination to a cce combination.

Do not restore system parameters on systems with a different software version.

► To restore system parameters to the system

1. Choose **Utility** > **Maintenance**.
2. Select 1 **Maintenance** from the **Maintenance Type** list on the left of the screen.
3. Select **(15) Parameter Read/Write** from the **Maintenance** Items list on the right.
4. Choose **Select** to open the **Parameter Read/Write** window.
5. Insert the storage medium into the control unit computer.
6. Select the required storage medium in the **Media** area.

Option	Description
Floppy Disk	Select this option to read the data from a floppy disk.
Mass Storage	Select this option to read the data from a mass storage. If a **USB** storage device is inserted, the instrument uses the USB as mass storage. If no USB storage device is inserted, the instrument uses a DVD disk as mass storage.

Table B-37 Media area

7. Select the **Parameter Read** option in the **Function** area.
8. Choose **Execute** and confirm with **Yes** to start loading the data.

■

Maintenance C

15 General maintenance C-3
16 Maintenance cu 150 . . . . . C-47
17 Maintenance c 501 with ISE C-67
18 Maintenance e 601 . . . . . C-119

General maintenance

This chapter provides general information about maintenance for the **cobas** 6000 analyzer series. Concepts, such as maintenance pipes, maintenance types, parallel and background maintenance are described as well as instrument care. In addition, a combined maintenance schedule for all **cobas** 6000 modules is provided.

In this chapter

Chapter **15**

Overview C-5
General information on performing maintenance for the cobas 6000 analyzer C-6
Definitions C-8
Maintenance concept C-8
Maintenance pipes C-10
Defining and editing maintenance pipes C-11
Deleting maintenance pipes C-12
Performing maintenance items or pipes C-13
Using maintenance pipe functions C-15
Power Up Pipe function C-15
Start Up pipe function C-16
Sleep Pipe function with green wash rack C-17
Maintenance types C-18
Defining and editing maintenance types C-19
Tracking maintenance C-21
Maintenance report C-22
Maintenance schedules C-23
Daily maintenance C-24
Checks before start-up of the analyzer C-24
Maintenance items that can be performed in a Power Up pipe C-24
Maintenance items before shutdown C-25
Daily maintenance – only if last run has been interrupted C-25
Weekly maintenance C-26
Every two weeks maintenance C-27
Monthly maintenance C-28
Every three months maintenance C-29
Every six months maintenance C-29
As needed maintenance C-30

Automating instrument care with maintenance pipes C-32
Recommended maintenance pipes C-32
Power ON C-32
Sleep C-32
Weekly shutdown C-33
Extended power ON (1-2 days – only e 601) C-33
Extended power ON (2-7 days – only e 601) C-33
Extended power OFF (2-7 days – only e 601) C-33
Background and parallel maintenance C-34
Performing background maintenance C-36
Performing parallel maintenance C-37
Stopping background and parallel maintenance C-37
List of maintenance items C-38
List of maintenance checks C-43

Overview

Pay attention to the safety precautions!

Before performing maintenance for any part of the instrument, observe the general safety information.

See *General safety information* on page A-3.

The part Maintenance contains information about the following topics:

- General maintenance

  This chapter contains an overview of maintenance on the analyzer and describes how maintenance is managed.

- Module specific maintenance actions

  The module-specific maintenance actions are described in separate chapters.

  For more information, see:
  Maintenance cu 150 on page C-47
  Maintenance c 501 with ISE on page C-67
  Maintenance e 601 on page C-119

All of the software screens shown in this part are used as examples only. Your screens may vary depending on your system setup.

General information on performing maintenance for the cobas 6000 analyzer

For most maintenance actions, either a module has to be in standby or the analyzer has to be in shutdown status. This section explains what shutdown status is, how to put the analyzer in shutdown status, how to restart the analyzer, and how to release the analyzer in standby status after interlock function has generated an error message.

Make sure to put the analyzer in shutdown status or in an appropriate maintenance mode (for example, incubator bath cleaning mode) before replacing parts.

Keep the top cover of the analytical module closed for maintenance carried out with the system powered on. If a check or maintenance requires open covers, be careful not to touch any other than the aimed-at parts.

Operator time and System time

In the chapters of part C Maintenance the operator time and the system time for each maintenance item are mentioned.

The *operator time* is the estimated time that a trained person requires to perform this maintenance item.

The *system time* is the approximate time that the system requires to perform the required maintenance items. As most maintenance items can be performed in standby or shutdown status, the system time for shutdown of the analyzer (approximately 3 minutes) and for switching on the analyzer (approximately 12 minutes) is not included in the calculation of the system time.

See *List of maintenance items* on page C-38.

Shutdown status

Shutdown status is the condition where analytical module(s) and control unit are disconnected and the operation power switch is switched off. Power for keeping the reagents cool, however, is still supplied.

System time

approximately 3 minutes

► To shutdown the analyzer

1. Choose **Shut Down** (global button) to display the **Shut Down** window.
2. Select the **Shut Down** option, choose **Execute** and confirm the shutdown.
3. Wait until the computer power supply turns off. Then, switch off the power switch of the printer and monitor.
4. Switch off the operation power switch on the left of the rack sampler unit.

■

If the power of the analyzer is switched off prior to the complete shutdown of the computer, the instrument may not start up properly when power is supplied again.

- Make sure the monitor indication has changed from shutdown to a state where nothing is displayed.
- Then, switch off the analyzer power switch.

System time

approximately 12 minutes

► To switch on the analyzer

1 Switch on the analyzer's operation power switch located on the left of the rack sampler unit.

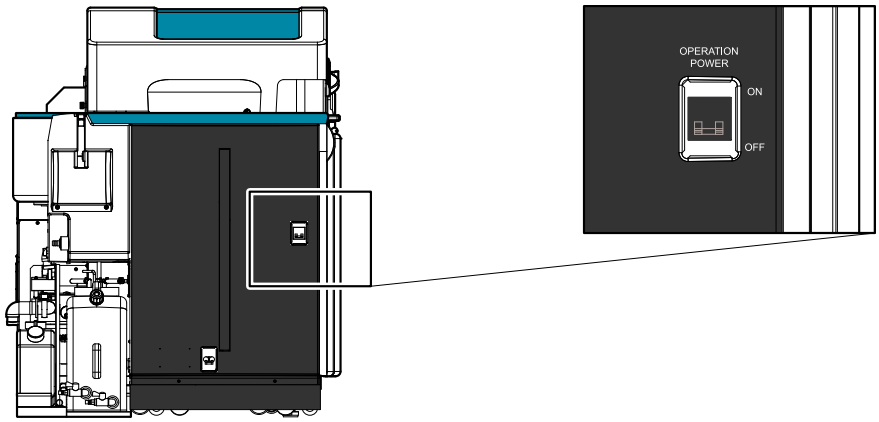

Figure C-1 Operation power switch

The system starts the initialization routine.

2 Switch on the computer of the control unit, the monitor, and the printer.

3 After initialization, the Logon screen displays. Enter your operator ID and password to log on.

4 Choose **OK** to gain access to the software and begin system operation.

■

If the logon mode is not activated (**Utility** > **System** (Page 3/4) > **Operator ID**), the software opens at the **System Overview** screen.

Definitions

Maintenance items

A single maintenance procedure

For a list of maintenance items, see *List of maintenance items* on page C-38.

System-controlled (automatic) maintenance

Maintenance items that are performed without operator interaction (such as (6) Air Purge)

Operator-controlled (interactive) maintenance

Maintenance items that require operator interaction (such as **(10) Incubator Bath Cleaning**).

User-definable (manual) maintenance

Users may define maintenance items specific for their laboratory (such as **Cleaning Sample Probe**). User-definable maintenance items are always maintenance actions that have to be performed manually.

Maintenance pipe

A combination of sequential maintenance items programmed into a fully automated procedure, which can be performed by the analyzer without operator intervention.

Maintenance pipe function

A function that automatically starts a maintenance pipe at a particular time (e.g., at power-up).

Maintenance type

A set of maintenance items (system-controlled, operator-controlled and user-definable) and maintenance pipes grouped according to certain functions (such as daily or weekly maintenance).

Maintenance concept

This section explains how the analyzer supports the operator when performing maintenance.

Performing maintenance items manually

Maintenance items can be performed manually on the **Utility** > **Maintenance** screen.

Operator-controlled and user-definable maintenance items cannot be part of a maintenance pipe. Thus, they have to be performed manually.

See *Performing maintenance items or pipes* on page C-13.

Maintenance pipes—performing maintenance items automatically

A maintenance pipe is a set of system-controlled maintenance items (batch set). You can use a maintenance pipe so that certain maintenance items occur in a certain sequence.

Before usage, maintenance pipes must be defined under **Utility** > **System** (**Page 2/4**) > **Pipe Setting**. They comprise up to ten maintenance items including parameters belonging to them.

Maintenance pipes can be executed in two different ways:

- Manually by the user
- Automatically by means of *maintenance pipe functions* at those events:
  - At power up of system (**Power Up Pipe** function)
  - Before start of analysis (**Start Up Pipe** function)
  - Before entering sleep mode (**Sleep Pipe** function)

For more information on maintenance pipes, see *Defining and editing maintenance pipes* on page C-11.

Maintenance types—scheduling and tracking maintenance items

Maintenance items and maintenance pipes can be assigned to a maintenance type according to certain functions (such as daily or weekly maintenance).

Within a maintenance type you can assign maintenance intervals (Period) and warning levels to each maintenance item and maintenance pipe. Thus, you can create and customize a maintenance schedule for any periodic maintenance tasks.

If a maintenance item or a maintenance pipe has been scheduled, you can track its status (date of last execution and warning level) on the **Maintenance** screen. The status of maintenance types is also displayed on the **System Overview** screen.

Maintenance types are configured in **Utility** > **System** (**Page 2/4**) > **Maintenance Setting**.

For more information on defining and using maintenance types, see:
Defining and editing maintenance types on page C-19
Tracking maintenance on page C-21

Maintenance report—recording maintenance

The analyzer records the execution of maintenance items in the **Maintenance Report**.

The **Maintenance Report** is requested through **Print** (global button) > **Utility** > **Maintenance Report**.

See *Maintenance report* on page C-22.

Parallel and background maintenance

Various maintenance procedures can be performed in parallel, meaning that one module can be performing a maintenance item while another module is performing a different maintenance item. Maintenance procedures may also be performed in background while the system is in the Operation mode.

See *Background and parallel maintenance* on page C-34.

Maintenance pipes

A maintenance pipe is a set of system-controlled maintenance items (batch set). Using maintenance pipes saves time by allowing the system to perform a series of maintenance items without operator intervention.

Be sure to note the relation between *maintenance pipes* and *maintenance pipe functions*:

Maintenance pipes

Before usage, maintenance pipes must be defined under **Utility** > **System** (**Page 2/4**) > **Pipe Setting**. The name of a pipe is freely definable, e.g. **Power Up pipe**.

Roche Diagnostics recommends using maintenance pipes for automating instrument care, but there are no pre-defined pipes on the system by default.

For more information, see:
Defining and editing maintenance pipes on page C-11
Recommended maintenance pipes on page C-32

Maintenance pipes can be executed manually by the user. Alternatively, they can be executed automatically by means of *maintenance pipe functions*.

Maintenance pipe functions

A maintenance pipe function triggers the system to start a maintenance pipe at one of those three particular times (events):

- At power-up or wake up (**Power Up Pipe** function)
- Before start of analysis (**Start Up Pipe** function)
- Before entering sleep mode after the last maintenance item is completed (**Sleep Pipe** function)

See *Maintenance pipe function* on page C-8.

Example

The **Power Up pipe** contains multiple maintenance items (Figure C-2). It can be executed manually or be assigned e.g., to the **Power Up Pipe** function. In the latter case, the pipe function will automatically start the maintenance pipe at power-up.

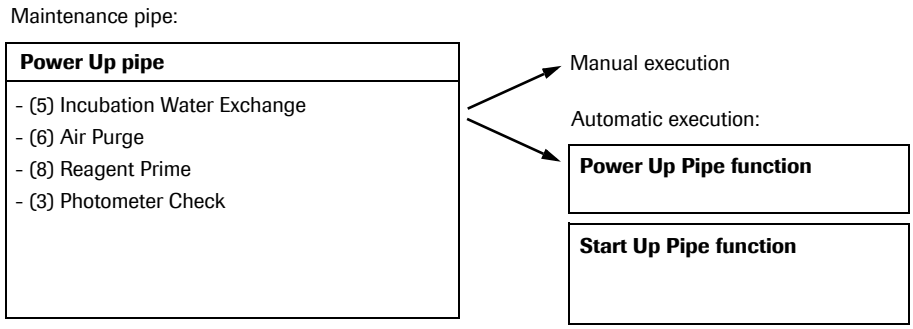

Figure C-2 Example of maintenance pipes and maintenance pipes functions

Note that:

- **Power On** is used as a name for a maintenance pipe. (This name is freely definable.)
- **Power Up Pipe** is a fixed name of a maintenance pipe function.

The following sections describe how maintenance pipes are defined, executed, and deleted.

Defining and editing maintenance pipes

Use the following procedure to program a series of maintenance items into a specific maintenance pipe. Up to ten items can be defined in each pipe. These items are performed one after the other. When a maintenance item is performed as part of a pipe, an asterisk appears on the left side of the date on the **Maintenance Report**.

See *Maintenance report* on page C-22.

► To edit a maintenance pipe or to define a new pipe

1 Choose **Utility** > **System** (**Page 2/4**) > **Pipe Setting** to display the **Maintenance Pipe Setting** window.

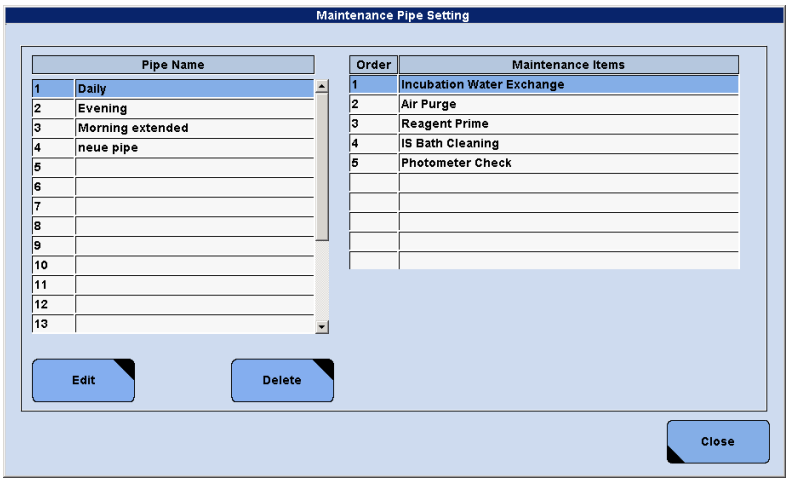

Figure C-3 Maintenance Pipe Setting window

2 Choose an existing pipe in the **Pipe Name** list to edit the pipe or choose the first blank line to define a new pipe. Choose **Edit** to display the **Edit Pipe** window.

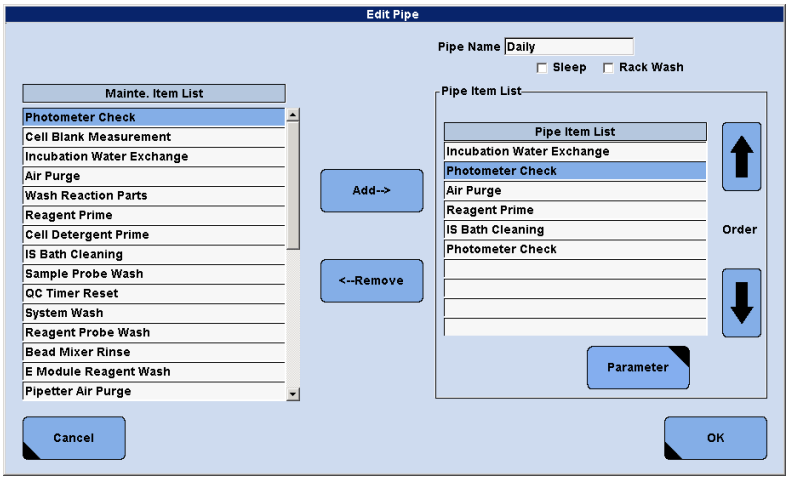

Figure C-4 Edit Pipe window

3 Type an unused name for the new pipe in the **Pipe Name** text box or edit the name of the existing pipe if you want to change its name.

To carry out washing with a green wash rack, select the **Rack Wash** check box. Set the green wash rack in the rack loader and execute the maintenance pipe. The maintenance pipe will be performed after the washing procedure.

The green wash rack procedure will not be performed if the pipe is executed as a **Power Up Pipe** or a **Start Up Pipe**.

4 Add a maintenance item to the **Pipe Item List** by choosing the maintenance item on the **Maintenance Item List**, then choose **Add**.

5 Choose **Parameter** to select or deselect specific modules or define the number of cycles performed depending on the maintenance item highlighted.

For more information about the parameters of the different maintenance items, refer to the *Online Help* of the particular window.

6 Choose **OK** to save the settings and return to the **Edit Pipe** window.

7 Repeat steps 4 to 6 for all items that are to be included in the pipe.

8 Delete items from the pipe by choosing the appropriate item on the **Pipe Item List**, then choose **Remove**.

Items must be listed in the sequence that they are to be performed by the system. If the items are not in the desired order, choose the item to be reordered to highlight it, then choose the appropriate arrow to move the item up or down in the list.

9 Choose **OK** when the pipe settings are complete. The pipe then appears in the **Pipe Name** list in the **Maintenance Pipe Setting** window and as an option on **Utility** > **System** (**Page 2/4**) > **Power Up Pipe Setting**.

■

Deleting maintenance pipes

This section describes how to delete maintenance pipes.

► To delete a maintenance pipe

1 Choose **Utility** > **System** (**Page 2/4**) > **Pipe Setting**.

2 In the **Pipe Name** list, choose the name of the pipe to be deleted to highlight it.

3 Choose **Delete** and confirm with **Yes** to delete the maintenance pipe.

■

Performing maintenance items or pipes

Maintenance pipes are normally performed automatically by the system as a power up pipe or a start up pipe. But they can also be performed manually. Maintenance pipes can only be performed if they are part of a maintenance type.

To manually perform a maintenance pipe, it must be configured as an item of a maintenance type.

See *Defining and editing maintenance types* on page C-19.

If a single maintenance item is not part of a maintenance pipe, it can only be performed manually.

► To execute a maintenance item or pipe

1 If a maintenance pipe with the green wash rack option is to be executed, load the green wash rack on the system.

See:
Sleep Pipe function with green wash rack on page C-17
To prepare the wash rack on page C-74

2 Choose **Utility** > **Maintenance** to display the **Maintenance** screen.

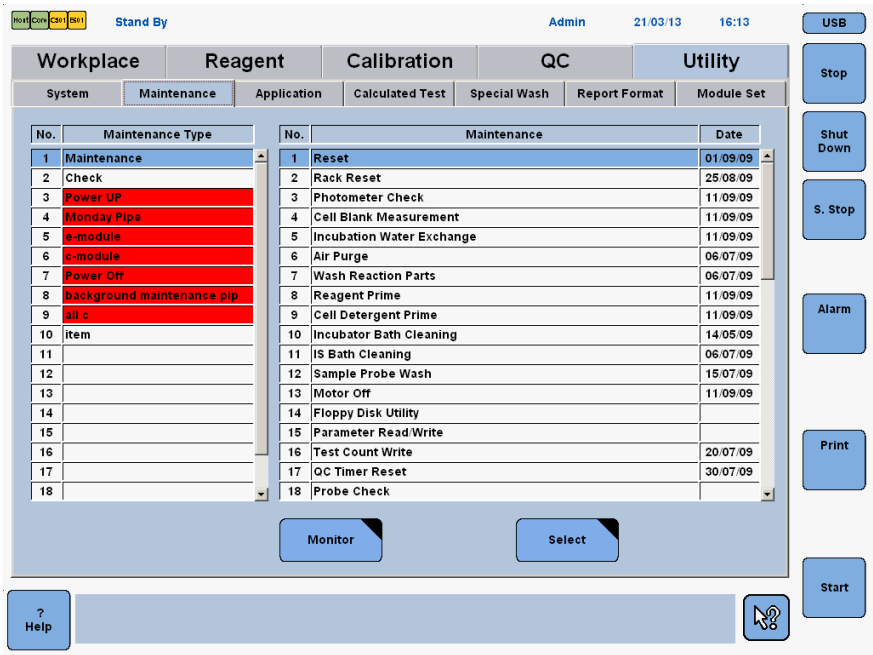

Figure C-5 Maintenance screen

3 Choose an entry from the **Maintenance Type** list.

- The entries **Maintenance** and **Check** are predefined. They include only maintenance items, but no pipes.
- A self-defined maintenance type can include both: Maintenance items and maintenance pipes.

4 Select the maintenance item or pipe to be performed from the **Maintenance** Item list.

A maintenance pipe can only be selected, if it was configured as an item of a maintenance type.

5 Choose **Select**.

6 Define any parameters required.

7 Choose **Execute**.

■

The maintenance pipe or item is performed. The date of the maintenance pipe or item is updated.

If the pipe is defined as a **Sleep** pipe, the system will enter in sleep mode after the pipe has been performed.

See *Sleep Pipe function with green wash rack* on page C-17.

Using maintenance pipe functions

Maintenance pipes can be performed automatically by the system by means of maintenance pipe functions. The system provides three maintenance pipe functions, which are described in the following.

Power Up Pipe function

Use the **Power Up Pipe** function to select a pipe to be performed at power up of the system. In addition, you can set a wake up time when the power up of the system—and thus the selected pipe—is performed. However, the wake-up time takes effect only if the system was put in sleep mode before (and not put to shutdown status).

No sleep function and green wash rack during Power Up Pipe

The sleep function and green wash rack procedure will not be performed during the **Power Up Pipe**, even though it is defined in the corresponding pipe settings.

► To activate the Power Up pipe function

1 Choose **Utility** > **System** (**Page 2/4**) > **Power Up Pipe Setting**.

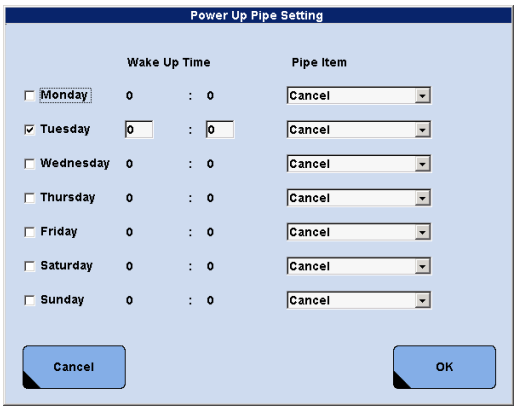

Figure C-6 Power Up Pipe window

2 Select the pipe to be performed at power up from the drop-down list box for each day of the week.

3 In case you want to set a wake-up time do the following:

- Select the check box to the left of the weekday for which you want to set a wake-up time.
- Set the time in the two boxes to the right of the check box.

4 Choose **OK**.

■

Start Up pipe function

The **Start Up Pipe** function is used to automatically perform a selected pipe before the start of analysis.

No sleep function and green wash rack during Start Up Pipe

The sleep function and green wash rack procedure will not be performed during the **Start Up Pipe**, even though it is defined in the corresponding pipe settings.

► To activate the Start Up pipe function

1 Choose **Start** (global button) or press the F2 key.

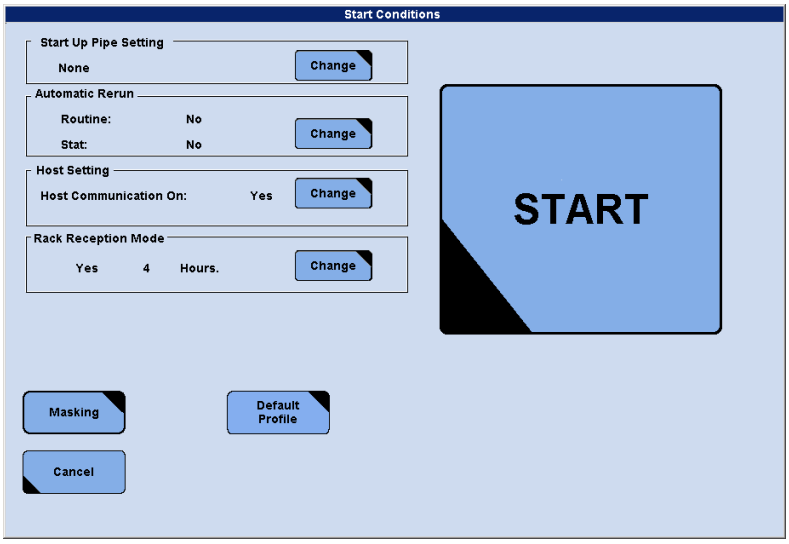

Figure C-7 Start Conditions screen

The **Start Up Pipe Setting** area displays the maintenance pipe currently selected as **Start Up** pipe. If no maintenance pipe is selected, None is displayed.

2 Choose **Change** in the **Start Up Pipe Setting** area.

3 Select the desired start up pipe from the list box on the **Pipe Function** window.

4 Choose **OK** to accept the change.

■

Once the start up pipe begins, the setting defaults to **None**.

Sleep Pipe function with green wash rack

The **Sleep Pipe** function enables the system to enter in sleep mode after a pipe has been performed. If the **Sleep Pipe** function is not activated (**Sleep** check box is not selected), the system turns to standby when a pipe is completed.

The sleep function and green wash rack procedure will not be performed if the pipe is executed as a **Power Up Pipe** or **Start Up Pipe**.

► To activate the Sleep Pipe function

1 Choose **Utility** > **System** (**Page 2/4**) > **Pipe Setting** to display the **Maintenance Pipe Setting** window.

2 Choose the pipe in the **Pipe Name** list to be performed as a sleep pipe.

3 Choose **Edit** to display the **Edit Pipe** window.

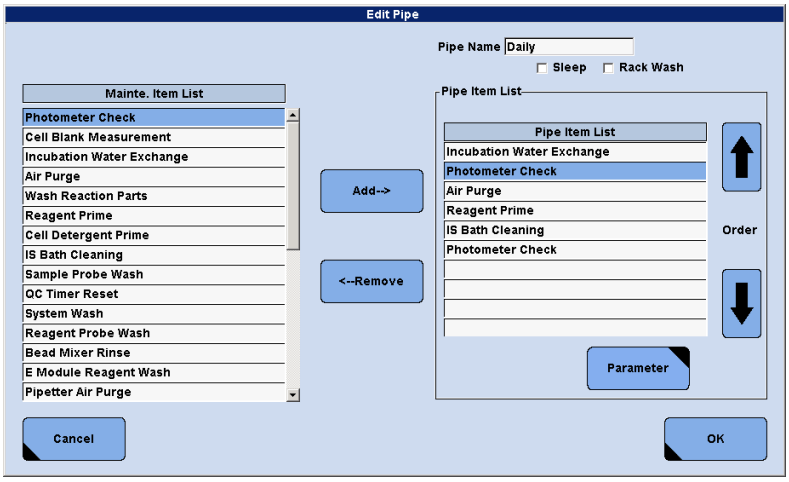

Figure C-8 Edit Pipe window

4 Select the **Sleep** check box to activate the **Sleep Pipe** function.

The system automatically turns to Sleep mode after the pipe is completed.

See *Performing maintenance items or pipes* on page C-13.

5 Select the **Rack Wash** check box in order to carry out washing with a green rack before pipe operation.

6 Choose **OK** to save the settings and return to the **Maintenance Pipe Setting** window.

■

Maintenance types

Maintenance items and maintenance pipes can be assigned to a maintenance type according to certain functions (such as daily, weekly, or monthly maintenance).

By means of maintenance types you can create a maintenance schedule. A maintenance interval can be assigned to each maintenance item and maintenance pipe within a maintenance type.

Two Maintenance types are predefined: **Maintenance** and **Check**.

Maintenance Contains all available maintenance items except check routines.

Check Contains all check routines.

Defining and editing maintenance types

Use the following procedure to assort a series of maintenance items into a specific maintenance type.

► To edit a maintenance type or define a new type

1 Choose **Utility** > **System** (**Page 2/4**) > **Maintenance Setting**.

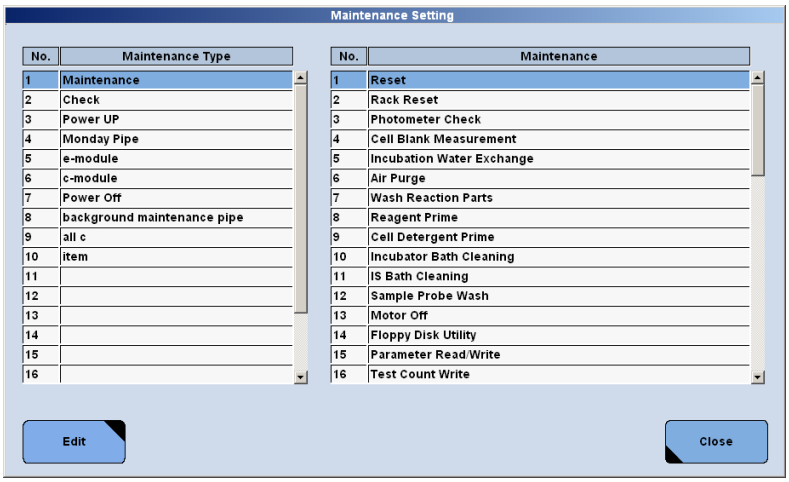

Figure C-9 Maintenance Setting window

2 If a new maintenance type is to be defined, select a free line from the **Maintenance Type** list, choose **Edit**, and proceed with step 3.

If an existing maintenance type is to be edited, select the appropriate line from the **Maintenance Type** list, choose **Edit**, and proceed with step 4.

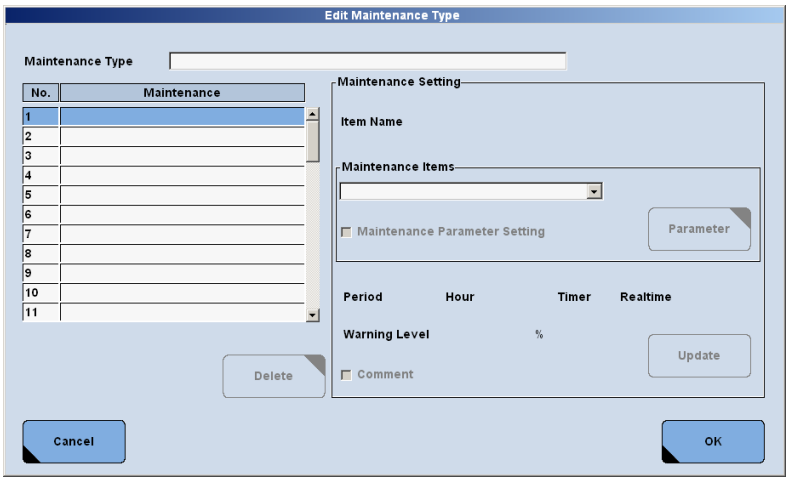

Figure C-10 Edit Maintenance Type window

3 Enter a name for the maintenance type in the text box at the top of the window.

4 Select an item from the **Maintenance Items** list box.

This list includes both maintenance items and user defined maintenance pipes.

The entry **User Definable** in this list can be used to define a new maintenance item that is not automated by the system (for example, clean instrument surfaces, check detergent level, etc.).

5 Choose **Parameter** to display the maintenance parameter window for the selected maintenance item, if available. Use this window to define parameters for the selected maintenance item.

For more information about the different **Maintenance Parameter** windows, refer to the *Online Help* of the particular window.

6 For maintenance tracking, enter the frequency in the text box and select the time period (**Hour**, **Day** and **Month**) from the **Period** list box.

7 Select a timer function from the **Timer** list box:

- **Realtime**: The actual time
- **Power On**: Cumulative power-on time of the analyzer (excluding sleep time)
- **Operation**: Cumulative operation time

  Power on time and operation time are both listed on the **Maintenance Report** (**Print** > **Utility** > **Maintenance Report**).

  If a frequency period is not required, enter **0** in the field to cancel.

See *Maintenance report* on page C-22.

8 Enter the warning level (%) in the **Warning Level** text box.

Example: If you define a period of 10 hours in real time and a warning level of 90%, the analyzer will remind you to perform the maintenance item after 9 hours.

9 Select the **Comment** check box to display the **Comment** field on the appropriate maintenance item window and to print the comment on the **Maintenance Report**.

10 Choose **Update** to add the item to the **Maintenance Items** list.

11 Repeat steps 3 to 10 for all maintenance items for the maintenance type.

12 Choose **OK** to save the collection and its settings and close the **Edit Maintenance Type** window.

■

Tracking maintenance

If you have assigned a maintenance interval to a maintenance item or a maintenance pipe within a maintenance type, the analyzer reminds you when a maintenance item or pipe has to be performed.

Maintenance tracking is done on the **Maintenance** screen. The status of maintenance actions is also displayed on the **System Overview** screen.

► To display the maintenance status

1 Choose **Utility** > **Maintenance** to display the **Maintenance screen**.

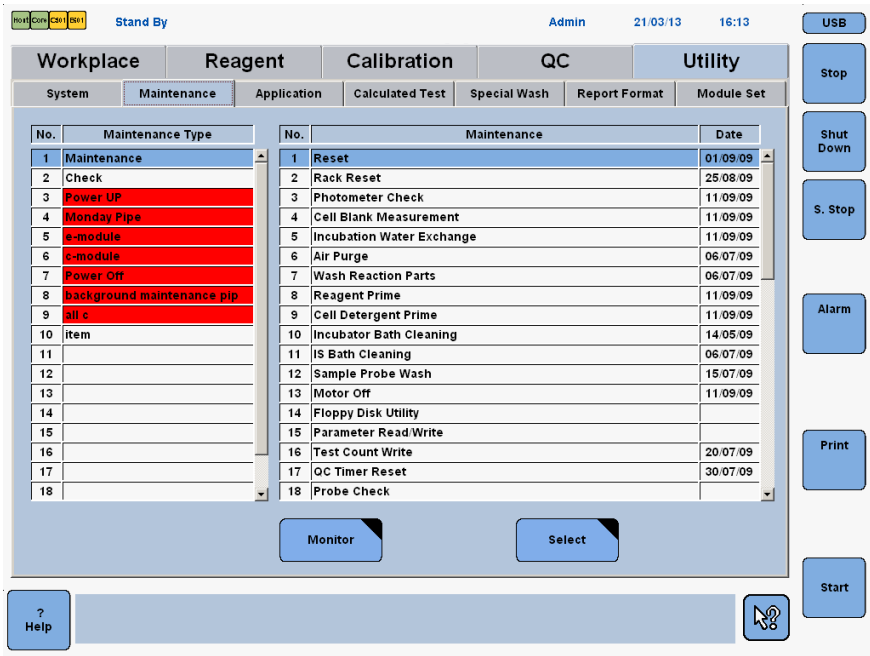

Figure C-11 Maintenance screen

The following information is displayed:

- The maintenance type is highlighted in yellow or red if any item or pipe for this maintenance type exceeds its warning level or its maintenance interval.
- The date the maintenance item or pipe was last performed.
- The date in the item list is highlighted in yellow if the maintenance item or pipe exceeds its warning level.
- The date in the item list is highlighted in red if the maintenance item or pipe exceeds its maintenance interval.

2 If you need more information about the maintenance status of a particular maintenance type, select a maintenance type and then a maintenance item or pipe from the **Maintenance** Item list.

3 Choose **Monitor** to view the status of the selected maintenance item or pipe.

For more information about the **Maintenance Monitor** window, refer to the *Online Help* of the particular window.

■

Maintenance report

The analyzer records the execution of maintenance items in the **Maintenance Report**.

The **Maintenance Report** is requested through **Print** (global button) > **Utility** > **Maintenance Report**.

```
                                                Maintenance Report      02/02/06      14:27

POWER ON TIME                                 984              HOURS
OPERATION                                      24              HOURS

MAINTENANCE TYPE:          Maintenance                                                Page         1
MODULE:                    E
MAINTENANCE
      DATE       TIME      OP.ID           COMMENTS
Cell Wash
Reagent Line Purge
Wash Reaction Parts
Reagent Flowpath Wash
System Wash
        02/01/10 13:45     admin
        01/12/17 12:14     admin
Photometer Check
Cell Blank Measurement
Incubation Water Exchange
Air Purge
Reset
        02/01/31 11:36     admin
        02/01/25 09:56     admin
        02/01/25 09:54     admin
        02/01/25 09:52     admin
        02/01/24 15:08     admin
        02/01/22 11:03     admin
        02/01/10 15:03     admin
        02/01/08 10:09     admin
        01/12/19 14:45     admin
```

Figure C-12 Maintenance report

For more information about the **Maintenance Report**, refer to the *Online Help* of the particular window.

Maintenance schedules

The following section provides you with an overview of the maintenance actions required for proper instrument care. The information is sorted according to the frequency in which the actions must be performed and includes the module and type of actions required.

Incorrect results after longtime power off

If the instrument has been powered off for a week or more, accuracy may deteriorate.

- Check the instrument performance before starting up operation again.
- For performance check details, consult your Roche service representative.

Spare parts

For proper instrument care use only original spare parts provided by Roche Diagnostics.

- The necessary spare parts are listed in the description of the corresponding maintenance action.
- For ordering the spare parts, please contact your Roche service representative.

Daily maintenance

The following tables provide you with an overview of the maintenance actions that must be performed on a daily basis.

Checks before start-up of the analyzer

There are various conditions that need to be checked before a system start-up. Therefore it is important to inspect the system prior to switching on the analyzer.

For more information, see *Starting inspection* on page B-34.

Maintenance items that can be performed in a Power Up pipe

Laid out below is a list of maintenance items that are suitable to be used in connection with the **Power Up Pipe** function or the **Start Up Pipe** function.

For more information, see:
Maintenance pipes on page C-10
Power Up Pipe function on page C-15
Start Up pipe function on page C-16

Visual checks at start-up

Note that even though a maintenance pipe can be executed automatically some maintenance items require visual checks by the operator.

Item	Action type: Power Up pipe with visual checks	Module
(5) Incubation Water Exchange	Check the temperature of the incubator bath on the System Overview screen before starting analysis.	**c** 501
(6) Air Purge	Check the syringes and the tubing system against leakage and air bubbles.	**c** 501
(8) Reagent Prime	ISE: All	**c** 501 (ISE)
(11) IS Bath Cleaning	Check against solid residual at the upper part of the IS baths.	**c** 501 (ISE)
Smart. Com Essential information upload	Backup function; configuration settings and patient data are uploaded from the flash memory of the analyzer to the **cobas** link PC.	**c** 501**e** 601
(3) Photometer Check	Check the photometer values on the **Print View** window.	**c** 501

Table C-1 Instrument care - daily (Power On)

Maintenance items before shutdown

Item	Action type: Cleaning	Module	See
Processing green wash rack	Position 1: Sample Cleaner 1 (cycles: 5) Position 2: SysClean (cycles: 15) Position 3: Activator (cycles: 15) The cycles are set in the **Wash Rack Sampling** area of the **Utility** > **System** screen: • **Photometric** refers to Position 1 • **ISE** refers to Position 2 and 3. Can be included in a sleep pipe.	**c** 501	C-73
Cleaning sample probe, reagent probes, ISE probe and ISE sipper nozzle	Clean the probes, shield pipe and the ISE sipper with alcohol (e.g. isopropyl alcohol or ethanol). Upon detection of abnormal sample aspiration caused by a clot, the sample probe is washed automatically by the analyzer.	**c** 501	C-77
Cleaning the drain port for high concentrated waste	Apply deionized water to the waste solution nipple at the rear of the **c** 501 to rinse off crystals.	**c** 501 (ISE)	C-80
Emptying and cleaning the concentrated waste tank	Empty the concentrated waste tank at the rear of the analyzer. Wear protective gloves when performing this procedure. Contents of the waste solution reservoir are potentially biohazardous.	**cu** 150	C-50
Cleaning cell rinse nozzles	Clean the cell rinse nozzles with deionized water.	**c** 501	C-79

Table C-2 **cu** 150 module-specific and **c** 501 module-specific instrument care - daily before shutdown

Item	Action type: Cleaning	Module	See
Cleaning probes and sippers: Sample probe	Wipe the outer surfaces of the probe and probe tip with a gauze pad soaked in deionized water. If the probe still appears dirty, wipe the outer surfaces with a gauze pad soaked in alcohol (e.g. isopropyl alcohol or ethanol). Then with deionized water again.	**e** 601	C-122
Cleaning probes and sippers: Reagent probe	Wipe the outer surfaces of the probe with a gauze pad soaked in alcohol. Then with deionized water again.	**e** 601	C-122
Cleaning probes and sippers: Sipper probes for measuring cells 1 and 2	Wipe the outer surfaces of the probe with a gauze pad soaked in alcohol. Then with deionized water again.	**e** 601	C-122
Cleaning probes and sippers: Pre-wash sipper and dispenser probe	Wipe the outer surfaces of the probe with a gauze pad soaked in alcohol. Then with deionized water again.	**e** 601	C-122

Table C-3 **e** 601 module-specific instrument care - daily before shutdown

Daily maintenance – only if last run has been interrupted

Item	Action	Module	See
Finalization	The system is primed with water and the measuring cells are filled with ProCell. Finalization must be performed if analyzer did not complete Post Operation at the end of the day, for example, due to a system stop.	**e** 601	C-155

Table C-4 Instrument care **e** 601 module - daily if last run interrupted

Weekly maintenance

The following tables provide you with an overview of the maintenance actions that must be performed on a weekly basis.

Item	Action	Module	See
Cleaning the reaction system (7) Wash Reaction Parts	Perform maintenance item **(7) Wash Reaction Parts** to clean sample probe with Sample Cleaner 1 (1.8 mL) and reagent probes and reagent cells with reagent from NaOH-D cassette (application code 947).	**c** 501	C-81
(4) Cell Blank Measurement	Perform maintenance item **(4) Cell Blank Measurement** to obtain new photometric reference.	**c** 501	C-82
Cleaning the rinse stations Sample probe Reagent probes ISE probe	Clean rinse stations using cotton swabs moistened with 2% EcoTergent solution. Inject 2% EcoTergent solution and deionized water. Clean the drying cylinder of the sample probe rinse station with cotton swabs moistened with alcohol (e.g. isopropyl alcohol or ethanol).	**c** 501	C-85
Removing and manually cleaning the IS bath	Put the analyzer in shutdown status or the module in standby and remove the IS bath. Wash away any crystals or contamination in the IS bath with deionized water.	**c** 501 (ISE)	C-87
Cleaning the cell covers (metal plates)	Wipe front and rear faces of cell covers using a gauze pad moistened with alcohol. Wipe openings of cell covers using a cotton swab.	**c** 501	C-83

Table C-5 **c** 501 module-specific instrument care - weekly

Item	Action	Module	See
Cleaning ProCell/CleanCell nozzles and replace reservoirs	Wipe the ProCell/CleanCell reservoir filling nozzle and electrodes with a cotton swab soaked in deionized water. Lift the sipper supply unit and exchange the reservoirs. Clean the inside of reservoir positions by wiping them with a cotton swab soaked in deionized water. Place new reservoirs in the reservoir positions and push the sipper nozzle unit back into place.	**e** 601	C-125
Cleaning mixing station and separation stations of the Pre-wash area Cleaning incubator Cleaning vortex mixing station	Wipe the surfaces of all components with a gauze pad soaked in deionized water. Afterwards, dry it with gauze pads and cotton swabs. Ensure that the Pre Wash Mixer, Pre Wash separation stations and their holes are not clogged. Check also that incubator holes are not clogged.	**e** 601	C-129 C-132 C-134
Cleaning microbead mixer	Very carefully wipe the microbead mixer paddle with a lint-free gauze square soaked in alcohol (e.g. isopropyl alcohol or ethanol) from top to bottom. Then use a brush to clean the 4 propeller plates with alcohol. Repeat the procedure using deionized water instead of alcohol.	**e** 601	C-136
Cleaning rinse stations Sipper station Mixer station Reagent station	Clean the inside of each rinsing station using a cotton tipped applicator stick soaked in alcohol, followed by a cotton tipped applicator stick soaked in deionized water. Fill a 50 mL syringe (with tubing attached) with EcoTergent. Inject the cleaning solution (empty the syringe) into the drain hole of the rinse bath. Fill a 50 mL syringe with deionized water. Inject the deionized water (empty the syringe) into the drain hole of the rinse bath.	**e** 601	C-138

Table C-6 **e** 601 module-specific instrument care - weekly

Every two weeks maintenance

The following table provides you with an overview of the maintenance actions that must be performed at least once every two weeks.

Item	Action	Module	See
Liquid flow path cleaning	Fill SysClean cups with SysClean to the lower limits (approx. 9 mL/cup) and perform maintenance item **(27) Liquid Flow Cleaning**. System time: approx. 30 min. This function will clean the sipper probe, tubings, and measuring cells. Perform liquid flow path cleaning at least every two weeks or after 2500 to 3000 determinations per channel, whichever comes first.	**e** 601	C-141

Table C-7 Instrument care - every two weeks

Monthly maintenance

The following table provides you with an overview of the maintenance actions that must be performed on a monthly basis.

Item	Action	Module	See
Cleaning the water tank	• Shut down the analyzer and disconnect the water tank. • Wipe float assembly with gauze pads. Rinse tank thoroughly with deionized water. If water tank is considerably contaminated, clean with 0.5% sodium hypochlorite solution using a brush. Rinse tank thoroughly with deionized water.	**cu** 150	C-53
Replacing reaction cells	Put the module in shutdown or motor off status. • Remove reaction cells. • Clean incubator bath and its drain filter (see below). • Install new reaction cells. • Perform maintenance item **(7) Wash Reaction Parts** then perform maintenance item **(4) Cell Blank Measurement**.	**c** 501	C-90
Cleaning the incubator bath	Put the module in shutdown status or in Incubator bath cleaning status. In case the analyzer is already in shutdown status, drain incubator bath water. Otherwise, perform maintenance item **(10) Incubator Bath Cleaning**. • Detach cell rinse unit and reaction cells. Clean incubator bath and photometer windows using lint-free gauze pads. Clean and rinse the filter with deionized water. • Reattach reaction cells and cell rinse unit. • Refill the bath with ~ 500 mL deionized water and start up the analyzer performing maintenance item **(5) Incubation Water Exchange** or—if **(10) Incubator Bath Cleaning** is used—choose **Continue** to release the incubator bath cleaning mode. Perform maintenance items **(7) Wash Reaction Parts** and **(4) Cell Blank Measurement** (see above).	**c** 501	C-92
Cleaning the detergent aspiration filters	Clean aspiration filters, which are attached to the tube ends, each time you replace a reagent bottle or at least once a month. • Remove the filter from the tube end. • Clean and rinse the filter with deionized water. • Perform maintenance item **(9) Cell Detergent Prime**.	**c** 501	C-98
Cleaning the ISE Ref. (KCl) aspiration filter	Clean aspiration filter each time you replace the ISE Ref. bottle or at least once a month. • Remove the filter from the tube end. • Clean and rinse the filter with deionized water. • Perform maintenance item **(8) Reagent Prime** with the **Ref** option selected.	**c** 501 (ISE)	C-88
Cleaning the filters behind the front doors	Remove dust from filter with a vacuum cleaner	**c** 501	C-100
Cleaning the filter of the rack sampler unit	Remove dust from filter with a vacuum cleaner	**cu** 150	C-57

Table C-8 Instrument care - monthly

Every three months maintenance

The following table provides you with an overview of the maintenance actions that must be performed at least once every three months.

Item	Action	Module	See
Cleaning the ultrasonic mixers	Include this maintenance in the monthly cleaning of the incubator bath. If the ultrasonic mixers were used for more than three months, or after 225.000 tests, whatever comes first. • Wipe surface of ultrasonic mixers with cotton swabs moistened with 2% EcoTergent solution. • Wipe off the detergent with cotton swabs moistened with deionized water. • At the end of the maintenance, perform maintenance check **(7) Cuvette Mixing**.	**c** 501	C-102
Replacing e 601 pinch valve tubing	• Perform maintenance item **(26) MC Exchange** before removing the tubes, to avoid dripping off fluid on the valves. • Shut down the system or put the **e** 601 module into standby mode. • Remove all 4 pinch valve tubings from the fittings. • Use a dry gauze pad to absorb liquid which drains from the acrylic block or from the tubing. • Take new pinch valve tubing and insert it through the pinch valve. • Slide the ends of the tubing over each fitting. • Perform maintenance item **(24) Sipper Air Purge** and **(25) MC Preparation** before resuming operation.	**e** 601	C-144

Table C-9 Instrument care - every three months

Every six months maintenance

The following table provides you with an overview of the maintenance actions that must be performed at least every six months.

Item	Action	Module	See
Cleaning the inlet water filter	• Put the analyzer in shutdown status. • Place a 500 mL beaker beneath the inlet water manifold. • Disconnect the inlet water hose. • Clean the filter thoroughly with deionized water, then reinstall the filter.	**cu** 150	C-58
Cleaning the cooling fans	• Put the analyzer in shutdown status. • Remove dust from filter with a vacuum cleaner or use a brush.	**cu** 150	C-60
Replacing the photometer lamp	Replace the photometer lamp if the lamp has been used for more than six months, for more than 750 hours of continuous powered-on time or if the photometer check value exceeds 14000, whatever comes first. • If any of the current photometer check data exceeds 14000, check light path for contamination or scratches. Check that cell no. 1 is at least half filled with water. • Replace the photometer lamp if necessary. • Wait 30 min for the photometer lamp to stabilize, then, perform maintenance item **(4) Cell Blank Measurement** (necessary to compensate for a change in light intensity).	**c** 501	C-105

Table C-10 Instrument care - every six months

As needed maintenance

The following table provides you with an overview of the maintenance actions that must be performed as needed.

Item	Cause	Action	Module	See
Emptying the concentrated waste tank	In spite of emptying the tank at the beginning of the day, it can get full in the course of a working session. An alarm is issued when the concentrated waste tank gets full.	• Empty the concentrated waste tank at the rear of the analyzer. • Wear protective gloves when performing this procedure. Contents of the waste tank are potentially biohazardous.	**cu** 150	
Cleaning the detergent aspiration filters	When replacing cell detergents (Cell Wash Solution I / NaOH-D, Cell wash Solution II / Acid Wash) behind the front doors. An alarm is issued on the **System Overview** screen when a detergent bottle gets empty (**Reagent Preparing** > **Reagent Load List** in the **Work Flow Guide**)	• Remove the filter from the tube end. • Clean and rinse the filter with deionized water. • Perform maintenance item **(9) Cell Detergent Prime**.	**c** 501	C-110
Cleaning the ISE Ref. (KCl) aspiration filter	When replacing ISE Ref. bottle. An alarm is issued on the **System Overview** screen when the ISE Ref. bottle is empty (**Reagent Preparing** > **Reagent Load List** in the **Work Flow Guide**)	• Remove the filter from the tube end. • Clean and rinse the filter with deionized water. • Perform maintenance item (8) Reagent Prime with the Ref option selected.	**c** 501 (ISE)	C-110
Cleaning the ultrasonic mixers	If the ultrasonic mixers were used for more than three months, or after 225.000 tests, whatever comes first.	• Wipe surface of ultrasonic mixers with cotton swabs moistened with 2% EcoTergent solution. • Wipe off the detergent with cotton swabs moistened with deionized water. • At the end of the maintenance, perform maintenance check **(7) Cuvette Mixing**.	**c** 501	C-112
Replacing the photometer lamp	If the photometer lamp has been used for more than six months, for more than 750 hours of continuous powered-on time or if the photometer check value exceeds 14000, whatever comes first.	• If any of the current photometer check data exceeds 14000, check light path for contamination or scratches. Check that cell no. 1 is at least half filled with water. • Replace the photometer lamp if necessary. • Wait 30 min for the photometer lamp to stabilize, then, perform maintenance item **(4) Cell Blank Measurement** (necessary to compensate for a change in light intensity).	**c** 501	C-112

Table C-11 **cu** 150 module-specific and **c** 501 module-specific instrument care - as needed

Item	Cause	Action	Module	See
Replacing nozzle tips on cell rinse nozzles	If the nozzle tips are worn but latest after 225.000 tests.	• Put the analyzer in Maintenance mode or Shutdown status. • Remove the cell rinse unit. • Replace nozzle tip. • Attach the cell rinse unit. • Check the alignment of the new nozzle tip. • Perform a **(3) Mechanism Check** (10 cycles).	**c** 501	C-110
Draining the vacuum tank	Alarm (Liquid in Vacuum Tank) is issued.	• Remove the cap holding the drain tube of the vacuum tank. • Drain the waste solution into a beaker.	**c** 501	C-113
Cleaning instrument surfaces	Spills on the instrument surface could be potentially biohazardous and damage the material.	• Clean up spills immediately using a paper towel moistened with disinfectant.	**cu** 150 **c** 501	C-61 C-114
Cleaning rack surfaces	Spills on the racks could potentially be biohazardous and damage the racks or barcode labels. A dirty or damaged barcode label leads to barcode read errors.	• Clean the surfaces of the rack with gauze pads or cotton swabs moistened with 2% EcoTergent solution. • Wipe off the EcoTergent solution with deionized water. • Wipe off the deionized water.	**cu** 150	C-62
Cleaning rack tray surfaces	Spills on the rack trays could potentially be biohazardous and damage the rack trays.	• Clean the surfaces of the rack tray with gauze pads or cotton swabs moistened with alcohol.	**cu** 150	C-64

Table C-11 **cu** 150 module-specific and **c** 501 module-specific instrument care - as needed

Item	Action	Module	See
Cleaning ProCell/CleanCell stand and aspiration tubes	If crystallization is observed, wipe the aspiration tubes and stand for the ProCell/CleanCell bottles with a lint-free gauze pad soaked in deionized water. Then dry them with dry gauze pads.	**e** 601	C-147
Cleaning reagent disk and compartment	If the disk appears dirty, use a lint-free gauze pad soaked with alcohol (e.g. isopropyl alcohol or ethanol). Then use gauze pads soaked with deionized water. Afterwards, dry with cloth or lint-free towels.	**e** 601	C-150
Cleaning solid waste compartment	Pull out the draw unit. Remove both waste liners. Wipe the containers (inside and outside) with gauze pads soaked in disinfectant. Then wipe with gauze pads soaked with deionized water. Place a new Waste Liner M into each waste container and updated it.	**e** 601	C-152
Finalization	The system is primed with water and the measuring cells are filled with ProCell. Finalization must be performed if analyzer did not complete Post Operation at the end of the day, for example, due to a system stop.	**e** 601	C-155
Cleaning instrument surfaces	Spills on the instrument surface could be potentially biohazardous and damage the analyzer. Clean up spills immediately using a paper towel moistened with disinfectant.	**e** 601	C-154

Table C-12 **e** 601 module-specific instrument care - as needed

Automating instrument care with maintenance pipes

A maintenance pipe is a set of system-controlled maintenance items.

Maintenance pipes can be executed manually by the user. Alternatively, they can be executed automatically by means of maintenance pipe functions.

Moreover, maintenance pipes can be programmed to automatically put the analyzer in sleep mode after the last maintenance item is completed (**Sleep Pipe** function).

Maintenance pipes are configured under **Utility** > **System** (**Page 2/4**) > **Pipe Setting**.

For more information on defining and using maintenance pipes, see:
Defining and editing maintenance pipes on page C-11
Power Up Pipe function on page C-15
Start Up pipe function on page C-16
Sleep Pipe function with green wash rack on page C-17
List of maintenance items on page C-38

Recommended maintenance pipes

This section shows the maintenance pipes that Roche Diagnostics recommends for proper use of the analyzer. The maintenance items must be programmed in the order listed here for the pipe to be performed correctly.

For more information on defining and using maintenance pipes, see *Defining and editing maintenance pipes* on page C-11.

Power ON

Maintenance Item	Module
(5) Incubation Water Exchange	**c** 501
(6) Air Purge	**c** 501
(8) Reagent Prime (ISE)	**c** 501
(11) IS Bath Cleaning	**c** 501
Smart. Com Essential information upload	**c** 501, **e** 601
(3) Photometer Check	**c** 501

Table C-13 Maintenance pipe Power ON

For more information on, see:
Power Up Pipe function on page C-15
Start Up pipe function on page C-16

Sleep

Maintenance Item	Module
Processing green wash rack	**c** 501

Table C-14 Maintenance pipe Sleep

For more information, see *Sleep Pipe function with green wash rack* on page C-17.

Weekly shutdown

Maintenance Item	Module
(7) Wash Reaction Parts	**c** 501
(4) Cell Blank Measurement	**c** 501

Table C-15 Maintenance pipe Weekly shutdown

Extended power ON (1-2 days – only e 601)

Execute this maintenance pipe when the system is idle for one to two days, for example, after weekends. After more than one day the **e** 601 measuring cell needs to be conditioned; therefore, maintenance item **(25) MC Preparation** is integrated in this maintenance pipe.

Maintenance Item	Cycles
(37) System Air Purge (E Module)	10
(8) Reagent Prime (Pre-wash Probe)	5
(25) MC Preparation	5

Table C-16 Maintenance pipe Extended power ON (1-2 days)

Extended power ON (2-7 days – only e 601)

Execute this maintenance pipe when the system is idle for two to seven days. In comparison to the maintenance pipe Extended power ON (1-2 days – only e 601) this recommendation includes priming the e module reagent lines.

Maintenance Item	Cycles
(24) Sipper Air Purge	5
(23) Pipetter Air Purge	10
(8) Reagent Prime (Pre-wash Probe)	5
(8) Reagent Prime (Reagent)	2
(25) MC Preparation	30

Table C-17 Maintenance pipe Extended power ON (2-7 days)

Extended power OFF (2-7 days – only e 601)

Execute this maintenance pipe before shutting down the system for two to seven days.

Maintenance Item	Cycles
(8) Reagent Prime (Pre-wash Probe)	5
(8) Reagent Prime (Reagent)	5
(33) Empty PC/CC Reservoir	–
(31) Pre-wash Sipper Air Purge	10

Table C-18 Maintenance pipe Extended power OFF (2-7 days)

Background and parallel maintenance

Background Maintenance

Background maintenance is used to perform maintenance functions on one or more modules while the system is still in Operation mode. In Background maintenance one or more modules are masked.

Parallel Maintenance

You may use parallel maintenance to perform different maintenance items on different modules while the system is in the standby mode.

Pipe functions can also be performed as background maintenance. Background maintenance can be stopped using **Cancel Maintenance** on the **System Overview** screen. However, not all maintenance items can be stopped once started.

For more information, see:
Performing background maintenance on page C-36
Performing parallel maintenance on page C-37

The following tables display the maintenance items and checks and indicate in which operation mode they can be performed.

✓ This item can be performed

Maintenance Item	c 501			e 601		
	Standby	Background	Parallel	Standby	Background	Parallel
(1) Reset	✓	✓	✓	✓	✓	✓
(2) Rack Reset	✓			✓		
(3) Photometer Check	✓	✓	✓			
(4) Cell Blank Measurement	✓	✓	✓			
(5) Incubation Water Exchange	✓	✓	✓			
(6) Air Purge	✓	✓	✓			
(7) Wash Reaction Parts	✓	✓	✓			
(8) Reagent Prime	✓	✓	✓	✓	✓	✓
(9) Cell Detergent Prime	✓	✓	✓			
(10) Incubator Bath Cleaning	✓	✓	✓			
(11) IS Bath Cleaning	✓	✓	✓			
(12) Sample Probe Wash	✓	✓	✓			
(19) System Wash				✓	✓	✓
(20) Reagent Probe Wash				✓	✓	✓
(21) Bead Mixer Rinse				✓	✓	✓
(22) E Module Reagent Wash				✓	✓	✓
(23) Pipetter Air Purge				✓	✓	✓
(24) Sipper Air Purge				✓	✓	✓
(25) MC Preparation				✓	✓	✓
(26) MC Exchange				✓	✓	✓
(27) Liquid Flow Cleaning				✓	✓	✓
(28) Inventory Update				✓	✓	✓
(29) Manual Cleaning				✓	✓	✓
(30) Pre-wash Sipper Rinse				✓	✓	✓

Table C-19 Available operation modes for Maintenance items (Sheet 1 of 2)

Maintenance Item	c 501			e 601		
	Standby	Background	Parallel	Standby	Background	Parallel
(31) Pre-wash Sipper Air Purge				✓	✓	✓
(32) Finalization				✓	✓	✓
(33) Empty PC/CC Reservoir				✓	✓	✓
(34) Initial Bead Mixing				✓	✓	✓
(35) Reagent Capping				✓	✓	✓
(36) AssayCup Discarding				✓	✓	✓
(37) System Air Purge (E Module)				✓	✓	✓
(38) System Prime (E Module)				✓	✓	✓
(39) Change Light Source Lamp	✓	✓	✓			

Table C-19 Available operation modes for Maintenance items (Sheet 2 of 2)

Maintenance Check	c 501			e 601		
	Standby	Background	Parallel	Standby	Background	Parallel
(2) ISE Check	✓	✓	✓			
(3) Mechanism Check	✓	✓	✓	✓	✓	✓
(4) Sample Barcode Reader Check	✓			✓		
(5) Reagent Barcode Reader Check	✓	✓	✓	✓	✓	✓
(6) Cassette Loading Check	✓	✓	✓			
(7) Cuvette Mixing	✓	✓	✓			
(8) Reagent Short Sensor Check				✓	✓	✓
(9) Sample Pipetting Check				✓	✓	✓
(10) Reagent Pipetting Check				✓	✓	✓
(11) Cap Opener Check				✓	✓	✓
(12) Bead Mixer Check				✓	✓	✓
(13) Gripper Check				✓	✓	✓
(14) Magazine Exchange Check				✓	✓	✓
(15) Sipper Check				✓	✓	✓
(16) Pre-wash Probe Check				✓	✓	✓
(17) Pre-wash Gripper Check				✓	✓	✓

Table C-20 Available operation modes for Maintenance checks

Performing background maintenance

Use the following procedure to perform maintenance on one analytical module while the system is in operation.

⚠ CAUTION

Delayed results due to errors when masking/unmasking analytical modules

If you mask/unmask an analytical module while the module is not in the required status, the module may switch into an unwanted status. This can interrupt the operation which leads to delayed results.

- Only **mask** an analytical module while the module is in **Stand By** or **Operation**.
- Only **unmask** an analytical module while the module is in **Stand By**.

When performing maintenance actions on a masked module, ensure that nobody unmasks and starts the module.

► To perform background maintenance

1. Ensure that the instrument is in **Stand By** or **Operation**.
2. Choose **Start** (global button) to display the **Start Conditions** screen.
3. Choose **Masking** to display the **Masking** window.
4. Choose **Module Masking** to display the **Module Masking** window.

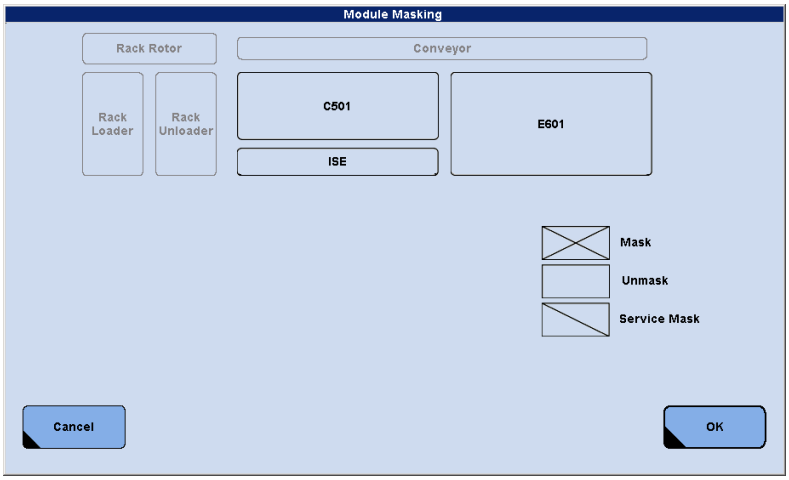

Figure C-13 Module Masking window

5. Choose the modules to be masked. When a module is masked, it appears crossed out on the display.
6. Choose **OK** to save the changes.
7. Choose **Yes** on the confirmation window.
8. Allow the module to go to standby mode. The module completes any samples assigned to it prior to masking, goes to **Sampling Stop** mode and then to **Stand By** mode.

The current module status is displayed on **Utility** > **Maintenance** > **Monitor** > **Maintenance Monitor** windows.

9 You may now perform any of the maintenance procedures listed in the background maintenance table.

See *Background and parallel maintenance* on page C-34.

■

Only unmask the module when the module is in **Stand By**.

Using maintenance pipes for background maintenance

A maintenance pipe can be performed during background maintenance on the following conditions:

- The maintenance pipe must only contain maintenance items for the masked module.
- The analyzer is in operation mode.
- The masked module is in standby

Performing parallel maintenance

You may use parallel maintenance to perform different maintenance items on different modules while the system is in the standby mode.

Pipe functions cannot be performed as parallel maintenance; you must perform all maintenance items individually.

For example, you can select maintenance item **(4) Cell Blank Measurement** on **c** 501 and maintenance item **(21) Bead Mixer Rinse** on **e** 601.

See *Background and parallel maintenance* on page C-34.

If you need to stop a maintenance procedure while the other modules are in operation, use the following steps.

Stopping background and parallel maintenance

Use the following procedure to stop background or parallel maintenance.

Do not choose **Stop** (global button) to end background maintenance. This will stop all functions on all modules.

► To stop background maintenance

1 Choose **System Overview**.

2 Select the module performing the function you want to stop.

3 Choose **Cancel Maintenance** to stop the action after confirmation.

■

List of maintenance items

The following section lists all maintenance items, on which module they can be performed, and a brief description of their function. The time period in brackets denotes the system time of the maintenance item in (min:sec).

c 501: Denotes that a function applies to both units, the photometric unit and the ISE unit.

c 501 **(ISE)**: Denotes that a function applies to the ISE unit of the **c** 501 module only.

c 501 **(P)**: Denotes that a function applies to the photometric unit of the **c** 501 module only.

(1) Reset

c 501 (0:24), **e** 601 (0:40): Mechanical parts are reset to their home positions.

cu 150: Mechanical parts are reset to their home positions, all racks are transported to the unloader.

(2) Rack Reset

cu 150: Mechanical parts are reset to their home positions, all racks including STAT racks are transported to the unloader. When there is a rack for automatic QC in the rack rotor, it will remain in the rotor unless the check box (**With Automatic QC Rack**) is selected.

(3) Photometer Check

c 501 **(P)** (3:53): Photometer output is checked by measuring a water blank of cell no. 1. Perform this maintenance item daily. To view report, choose **Print** (global button) > **View**. Measurement results must be below 14000. If results are higher, check the light path, if necessary replace the photometer lamp, then perform cell blank measurement.

Before performing this maintenance item, check that the temperature of the incubator bath water is within 37 ±0.1 °C (98.6 ±0.2 °F). Depending on the ambient temperature it can take up to 30 minutes after switching on the analyzer or after maintenance item **(5) Incubation Water Exchange** for the incubator to reach the correct temperature.

(4) Cell Blank Measurement

c 501 **(P)** (19:42): Water blanks of all cells are measured. If there is a difference greater than 0.1 absorbance units in the results for one cell compared to cell no. 1, that cell number is written to the **Abnormal Cell List**. To view this report choose **Print** (global button) > **View**.

Perform this maintenance item weekly.

(5) Incubation Water Exchange

c 501 **(P)** (4:41): Incubator bath water is exchanged and EcoTergent (approx. 4 ml) is added. Perform this maintenance item daily. If the **Incubation Water Exchange Setting** check box (**Utility** > **System**) is activated, the incubator bath water is exchanged five times and approx. 8 ml EcoTergent is added. This takes 17:30 min.

After this maintenance item has been performed, check that the temperature of the incubator is within 37 ±0.1 °C (98.6 ±0.2 °F) before performing maintenance item **(3) Photometer Check**. Depending on the ambient temperature it can take up to 30 minutes for the incubator to reach the correct temperature.

(6) Air Purge

c 501 (0:52): Air is purged from sample and reagent pipetters. Perform this maintenance item daily.

(7) Wash Reaction Parts

c 501 (P) (35:00): All cells and reagent probes are washed. The sample probe is washed with Sample Cleaner 1 (approx. 1 ml). The reagent probes and cells are

washed with detergent from a detergent cassette (approx. 58 ml NaOH-D, application code 947).

(8) Reagent Prime

c 501 **(ISE)**: Reagents are primed according to the chosen option (IS, Ref, or All).

Options	System time	Description	Reagent consumption
IS	4:35	ISE IS is aspirated through the sipper to prime the measurement cartridges.	ISE IS: 6.6 mL ISE Ref.: 0.8 mL
Ref	2:34	ISE Ref. is aspirated through the reference cartridge to prime the reference electrode.	ISE IS: 0 mL ISE Ref.: 9.0 mL
All	6:44	Both ISE IS and ISE Ref. are primed.	ISE IS: 6.6 mL ISE Ref.: 9.8 mL

Table C-21 **c** 501 reagent prime options

e 601: If **Reagent** is selected the tubings of ProCell and CleanCell are primed and air bubbles are washed out of the system by emptying the reservoirs and refilling them. If Pre-wash Sipper is selected the PreClean tubings are primed and air bubbles are washed out of the system.

(9) Cell Detergent Prime

c 501 **(P)** (7:30)**:** Reagent lines for Cell Wash Solution I / NaOH-D and Cell wash Solution II / Acid Wash are primed (30 times); reagent lines are purged of air and cells are filled up and emptied by vacuum.

(10) Incubator Bath Cleaning

c 501 **(P):** Performs transition to incubator bath cleaning mode: The photometer lamp is switched off and the incubator bath water is automatically drained. Cleaning of ultrasonic mixers or incubator bath is possible without complete system shutdown. Choose **Continue** on the **Utility** > **Maintenance** >**Incubator Bath Cleaning** window to end the incubator bath cleaning mode; the incubator bath is automatically refilled with water and EcoTergent (approx. 4 ml).

(11) IS Bath Cleaning

c 501 **(ISE)** (1:35): The IS bath is rinsed. Perform this maintenance daily. However, this is not necessary after processing a green rack (flow path washing) because IS bath cleaning is already included in that maintenance.

(12) Sample Probe Wash

c 501: The sample probe is washed with Sample Cleaner 1. This item can be used in case of a clogged probe.

(13) Motor Off

c 501: The motors of the **c** 501 module are switched off. Use this item to manually move different parts, such as reagent gripper or reaction disk, without having to shut down the analyzer. If you open the top cover of the **c** 501 module, the motors of the module are also switched off.

For more information, see *Interlock function: Reset after stop* on page B-239.

(14) Floppy Disk Utility

Control unit: A floppy disk inserted into the floppy disk drive will be formatted after confirmation.

(15) Parameter Read/Write

Control unit: Parameter settings are read from or written to a storage medium.

(16) Test Count Write

c 501, **e** 601: Test count for all modules and measuring cells is written to a storage medium.

(17) QC Timer Reset

c 501 (P), **e** 601: Resets the control interval timer.

For example, the control interval timer is set to 10 hours. When 5 hours are left, the user can reset the timer to 10 hours.

(18) Probe Check

c 501**:** Puts the **c** 501 module in probe adjust mode: In this mode, a probe—selected in the **Probe Adjust** window—can be moved to designated positions using the maintenance key. This maintenance item should only be used by specially trained operators to verify alignment of the probe.

For more information, refer to the separate maintenance manual *Interlock function cobas* **c** 501 *with ISE.*

(19) System Wash

e 601: Combination of maintenance items **(20) Reagent Probe Wash**, **(21) Bead Mixer Rinse**, and **(22) E Module Reagent Wash** is performed as many times as specified.

(20) Reagent Probe Wash

e 601: Both the inside (by aspirating the ProbeWash solution) and outside of the reagent pipetter probe is washed as many times as specified.

(21) Bead Mixer Rinse

e 601: The microbead mixer is rinsed as many times as specified.

(22) E Module Reagent Wash

e 601: The auxiliary reagent flow paths and the reservoirs for both ProCell and CleanCell are rinsed. That is, remaining liquid is aspirated from the reservoirs and discharged to the washing stations. Then, the auxiliary reagent flow paths and reservoirs are filled with water.

The sippers aspirate liquid in the reservoirs and discharge it to the washing stations as many times as necessary to drain the whole liquid of the reservoirs.

Afterwards **(38) System Prime (E Module)** and **(32) Finalization** should be performed.

(23) Pipetter Air Purge

e 601: Sample pipetter and reagent pipetter flow paths are purged of air as many times as specified.

(24) Sipper Air Purge

e 601: Sipper flow paths are purged of air as many times as specified.

(25) MC Preparation

e 601: Measuring cells are conditioned as many times as specified.

(26) MC Exchange

e 601: Sipper flow paths are rinsed with water as many times as specified and then emptied to be prepared for a measuring cell exchange.

(27) Liquid Flow Cleaning

e 601: Sipper flow paths are washed with SysClean. Liquid flow path cleaning must be performed at least once every two weeks or after 2500 to 3000 determinations per measuring cell.

(28) Inventory Update

e 601: The number of magazines with AssayTips and AssayCups in the loading area and empty magazines in the waste area are updated.

(29) Manual Cleaning

e 601: Sample pipetter, reagent pipetter, microbeads mixer, and sippers are reset and move to positions where manual cleaning of these parts can be done. The instrument stays in the maintenance function **Manual Cleaning** until the **Stop** (global button) or **Cancel Maintenance** on **System Overview** screen is chosen.

(30) Pre-wash Sipper Rinse

e 601: Pre-wash Sippers are rinsed in the wash station as many times as specified.

(31) Pre-wash Sipper Air Purge

e 601: Pre-wash Sipper flow paths are purged of air.

(32) Finalization
e 601 (5:30): Finalization routine is carried out on sample pipetter, reagent pipetter, sipper and detection unit.

(33) Empty PC/CC Reservoir
e 601 (2:40): The liquid in the ProCell and CleanCell reservoirs is drained.

(34) Initial Bead Mixing
e 601: Microbeads are mixed in all occupied positions on the reagent rotor.

(35) Reagent Capping
e 601: All open **cobas e** packs on the reagent rotor are closed.

(36) AssayCup Discarding
e 601: All AssayCups are taken out of the incubator and discharged to the waste by the gripper.

(37) System Air Purge (E Module)
e 601: The following maintenance functions are performed:

- (23) Pipetter Air Purge
- (24) Sipper Air Purge
- (31) Pre-wash Sipper Air Purge.

(38) System Prime (E Module)
e 601: ProCell, CleanCell, and both Pre-wash lines are primed at the same time.

(39) Change Light Source Lamp
c 501 (**P**): The photometer lamp is switched off. Use this item to exchange the photometer lamp without having to shut down the analyzer.

(40) Trace Doc Export
c 501**, e** 601**:** Backup function; configuration settings and patient data (identical to *Smart. Com Essential information upload*) are exported from the flash memory of the analyzer to a selected storage medium. With software available from your Roche Diagnostics representative this file can be archived and viewed on external personal computers and provides traceability for test results.

It is recommended to perform this maintenance item every day, before any data has been deleted. It can be performed manually or in a maintenance pipe.

For more information, see *Data storage* on page B-248.

Smart. Com Essential information upload
c 501**, e** 601**:** Backup function; configuration settings and patient data are uploaded from the flash memory of the analyzer to the **cobas** link PC. The five most recent backups are stored on the **cobas** link and allow for restoring parameter backup files to the flash memory of the analyzer.

It is recommended to perform this maintenance item every day. This maintenance item can only be performed in a maintenance pipe. Therefore it can only be selected on the **Edit Pipe** window under **Utility** >**System** >**Pipe Setting** > **Edit**.

For more information, see:
Defining and editing maintenance pipes on page C-11
Recommended maintenance pipes on page C-32

List of maintenance checks

The following section lists all maintenance checks, on which module they can be performed, and a brief description of their function.

(1) Check Disk

Files on hard disk, floppy disk, USB storage device, or DVD disk are checked by the control unit. A result list is available in the print buffer afterwards. This list is not automatically printed. The disk check can also be used to save a log file (Backup data file) and to determine the software version.

(2) ISE Check

c 501**(ISE)**: The electrode output of ISE cartridges ($Cl^-/K^+/Na^+$ and ISE reference cartridge) is measured with ISE IS and a listing of EMF values is printed out.

(3) Mechanism Check

The option **All** performs a functional check of mechanical parts of the entire sample line and each module. Make sure to place some racks in the rack loader.

The option **Rack Sampler** performs a functional check of mechanical parts of the rack sampler unit. Make sure to place some racks in the rack loader.

The option **Analyze Module** performs a mechanical check for selected modules according to entered number of cycles.

If the check box **With Photo Interrupter** check is selected, the system checks automatically all relevant photo coupler sensors during this maintenance function. Only the defective sensors are shown in the print view screen.

Choose **S. Stop** to end this maintenance check and to move all racks to the unloader.

(4) Sample Barcode Reader Check

The barcode on a sample tube is scanned. After pressing **Stop**, the data is displayed in the print preview for verification. There is no automatic printout. After pressing **Stop** a system reset has to be performed.

c 501**:** Check the function of the sample barcode reader:

Set a rack with barcoded tubes in the rack loader and start the sample barcode reader check.

The rack moves first to the barcode reader in the rack feeder line. After reading the relevant positions the rack moves to the barcode reader in the sampling line of the selected modules.

According to the selected cycles the rack moves to the unloader or back to the rack feeder line.

The reading results are shown in the print view screen.

(5) Reagent Barcode Reader Check

The reagent barcode reader is checked according to input cycle (minimum is 5 cycles).

c 501: After starting the **Reagent Barcode Reader Check** a reagent cassette must be inserted in the cassette loading port. The gripper retracts the cassette automatically and the barcode reader reads in the barcode information on the cassette 5 times. Finally the results are shown in the print view screen. The cassette is ejected to the loading port and can be removed.

e 601: The barcodes of the loaded **cobas e** packs are read.

(6) Cassette Loading Check

c 501: A check for cassette loading, gripper and piercer movement is performed according to input cycle (minimum: 5 cycles).

(7) Cuvette Mixing

c 501: Performs a functional check on the ultrasonic mixers (1:32)—optionally with cell wash (system time with cell wash: 19:26).

The reagent probe pipettes deionized water in the corresponding cell (cuvette) for R1, R2 and R3 mixer. Then the cuvette turns to the mixing position and ultra sonic mixing is executed. The proper operation of the corresponding mixer can be checked visually—the water in the cuvette is vibrating when the mixer is operating.

(8) Reagent Short Sensor Check

e 601: The sensors in the lines of the PreClean, ProCell and CleanCell bottles will be checked.

(9) Sample Pipetting Check

e 601**:** The movement of the sample pipetter is checked and its liquid level detection function.

(10) Reagent Pipetting Check

e 601**:** The movement of the reagent pipetters is checked.

(11) Cap Opener Check

e 601**:** The movement of the cap opener is checked.

(12) Bead Mixer Check

e 601**:** The movement of the microbead mixer is checked.

(13) Gripper Check

e 601**:** The movement of the gripper and its tip and AssayCup handling function is checked.

(14) Magazine Exchange Check

e 601**:** The movement of the magazine exchange is checked.

(15) Sipper Check

e 601**:** The movement of the sippers and their liquid level detection function is checked.

(16) Pre-wash Probe Check

e 601**:** The movement and function of the Pre-wash sipper is checked. The Pre-wash sipper and syringe will aspirate and discharge PreClean during this procedure.

Manually add cups to the separation stations.

(17) Pre-wash Gripper Check

e 601**:** The movement of the Pre-wash Gripper is checked as well as its AssayCup handling function.

Make sure to place AssayCups on the following positions before you start this procedure:

- Pre-wash Gripper position on the incubator (position 6)
- Vortex mixer position
- First position in the Pre-wash station

Maintenance cu 150

This chapter describes the maintenance actions required for correct and efficient running of the **cu** 150. The schedule of required periodic maintenance actions (daily, weekly, monthly…) is provided as well as maintenance actions that are performed as needed.

In this chapter

Chapter **16**

Maintenance schedule C-49
Daily maintenance C-50
Emptying and cleaning the concentrated waste tank C-50
Monthly maintenance C-53
Cleaning the water tank C-53
Cleaning the filter of the rack sampler unit C-57
Every six months maintenance C-58
Cleaning the inlet water filter C-58
Cleaning the cooling fans C-60
As needed C-61
Cleaning instrument surfaces C-61
Cleaning rack surfaces C-62
Cleaning rack tray surfaces C-64

Maintenance schedule

The intervals for maintenance and checkup recommended in this document are independent of the system operation time unless otherwise noted (e g. maintenance actions which are based on test count or time).

PO	Power OFF (shut down status)
SB	Stand by

	Procedure	Mode	Operator time (min)	System time (min)	Page
Daily	Emptying and cleaning the concentrated waste tank	PO	2		C-50
Monthly	Cleaning the water tank	PO	5		C-53
	Cleaning the filter of the rack sampler unit	SB/PO	5		C-57
Every 6 months	Cleaning the inlet water filter	PO	5		C-58
	Cleaning the cooling fans	PO	5		C-60
As needed	Cleaning instrument surfaces	SB/PO	5		C-61
	Cleaning rack surfaces				C-62
	Cleaning rack tray surfaces				C-64

Table C-22 Maintenance schedule **cu** 150

Create a maintenance schedule, which is customized to your laboratory's individual requirements. We recommend letting the analyzer's software remind the operator of all periodic maintenance tasks. You can do this by configuring maintenance types (from **Utility** > **System** (**Page 2/4**) > **Maintenance Setting**). Within a maintenance type, you can assign maintenance intervals (**Period**) and warning levels to each maintenance item and maintenance pipe.

For more information on scheduling maintenance tasks, see *Maintenance types—scheduling and tracking maintenance items* on page C-9.

Daily maintenance

In this section you find all the maintenance for the **cu** 150 module that must be performed every day.

Emptying and cleaning the concentrated waste tank

The system issues an alarm if the concentrated waste tank requires emptying. To prevent disruption to the daily routine, empty the concentrated waste tank at the end of the day before shutdown and clean the tank if necessary.

Operator time approximately 2 minutes

Materials required

- ☐ Water
- ☐ Laboratory disinfectant (no bleach)
- ☐ Paper towels

⚠ CAUTION

Harmful fumes due to combination of bleach with content of the waste tank

The combination of bleach with the content of the waste tank can cause potentially harmful fumes.

- Do not use bleach to clean the waste tank.

Do not use alcohol or bleach to clean the waste tank as this may damage the waste tank.

► To empty and clean the concentrated waste tank

1 Locate the concentrated waste tank at the rear of the rack sampler unit.

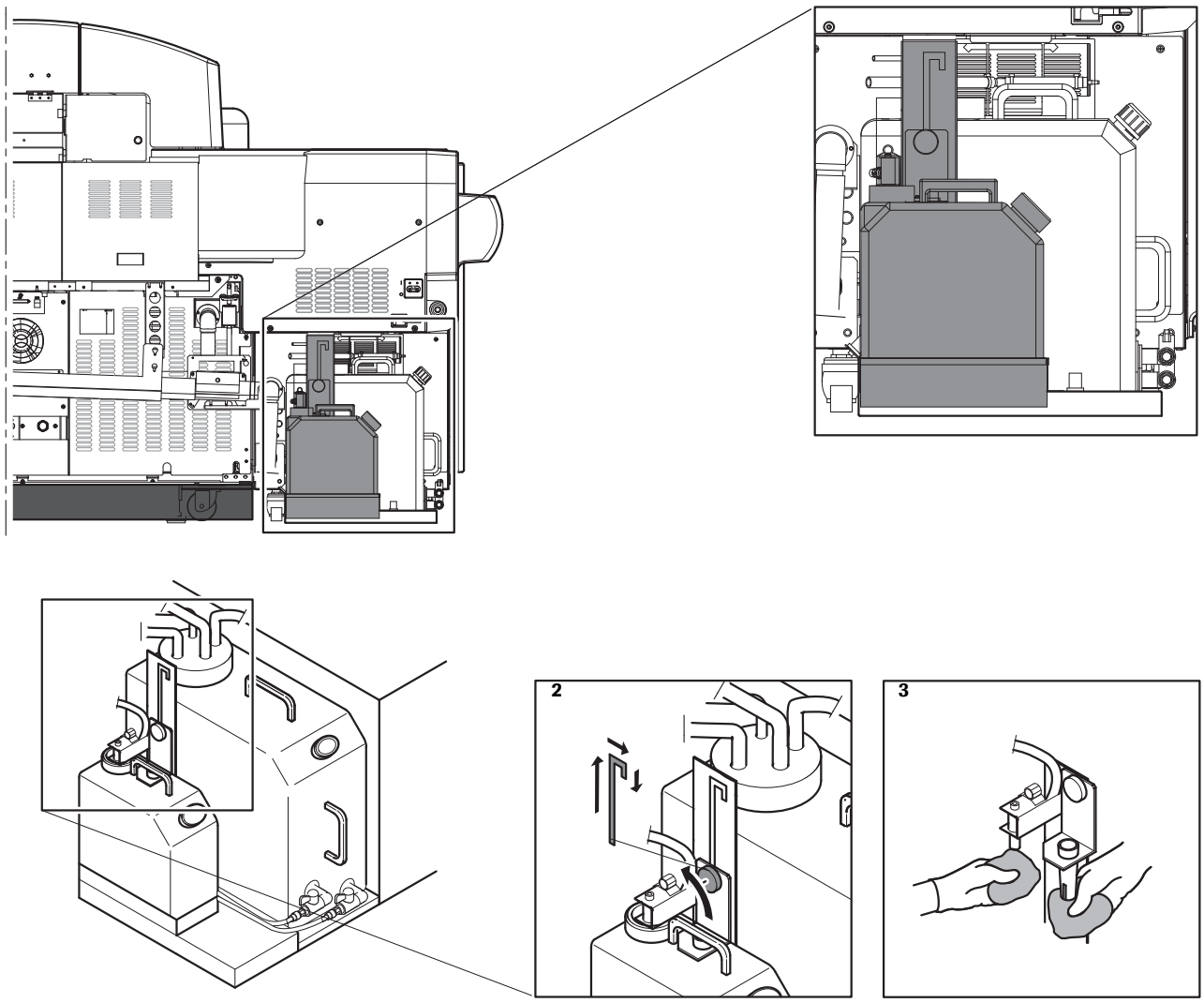

Figure C-14 Emptying and cleaning the concentrated waste tank

2 Lift the liquid level sensor assembly from the waste tank and secure it on the notch.

3 Clean the concentrated waste drain and the liquid level sensor and place paper towels below them.

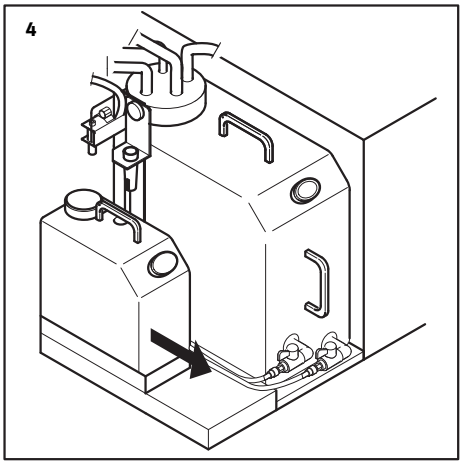

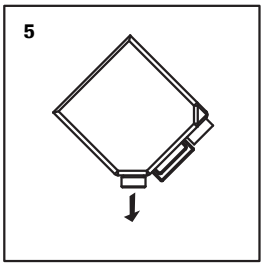

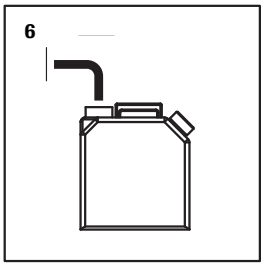

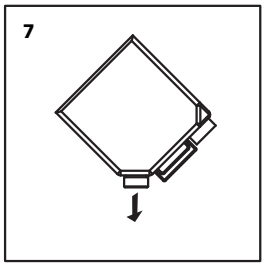

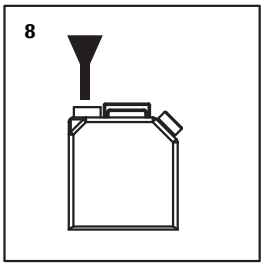

Figure C-15 Emptying and cleaning the concentrated waste tank

4 Remove the waste tank.

5 Dispose of the contents of the waste tank according to your laboratory's biohazardous waste disposal regulations.

6 Rinse the waste tank thoroughly with water

7 Dispose of the rinse water in the same manner.

8 Prepare the disinfectant according to the manufacturers' instructions and pour the disinfectant into the waste tank.

9 Place the waste tank back in its original position.

10 Place the liquid level sensor assembly back in the waste tank.

11 Dispose of the paper towels according to your laboratory's biohazardous waste disposal regulations and disinfect the area where you were working.

■

Monthly maintenance

In this section, you find all the maintenance for the **cu** 150 that must be performed at least once a month.

Cleaning the water tank

Contamination inside the tank will result in contamination of the entire flow path and adversely affect all measurements. Check the water tank at least once a month and clean the tank if necessary.

Operator time approximately 5 minutes

Materials required

- ☐ 0.5% sodium hypochlorite solution
- ☐ Deionized water
- ☐ Lint-free gauze pads
- ☐ Paper towels
- ☐ Brush

► To disconnect the water tank

1 Put the analyzer in shutdown status.

See *To shutdown the analyzer* on page C-6.

2 Locate the water tank at the rear of the rack sampler unit.

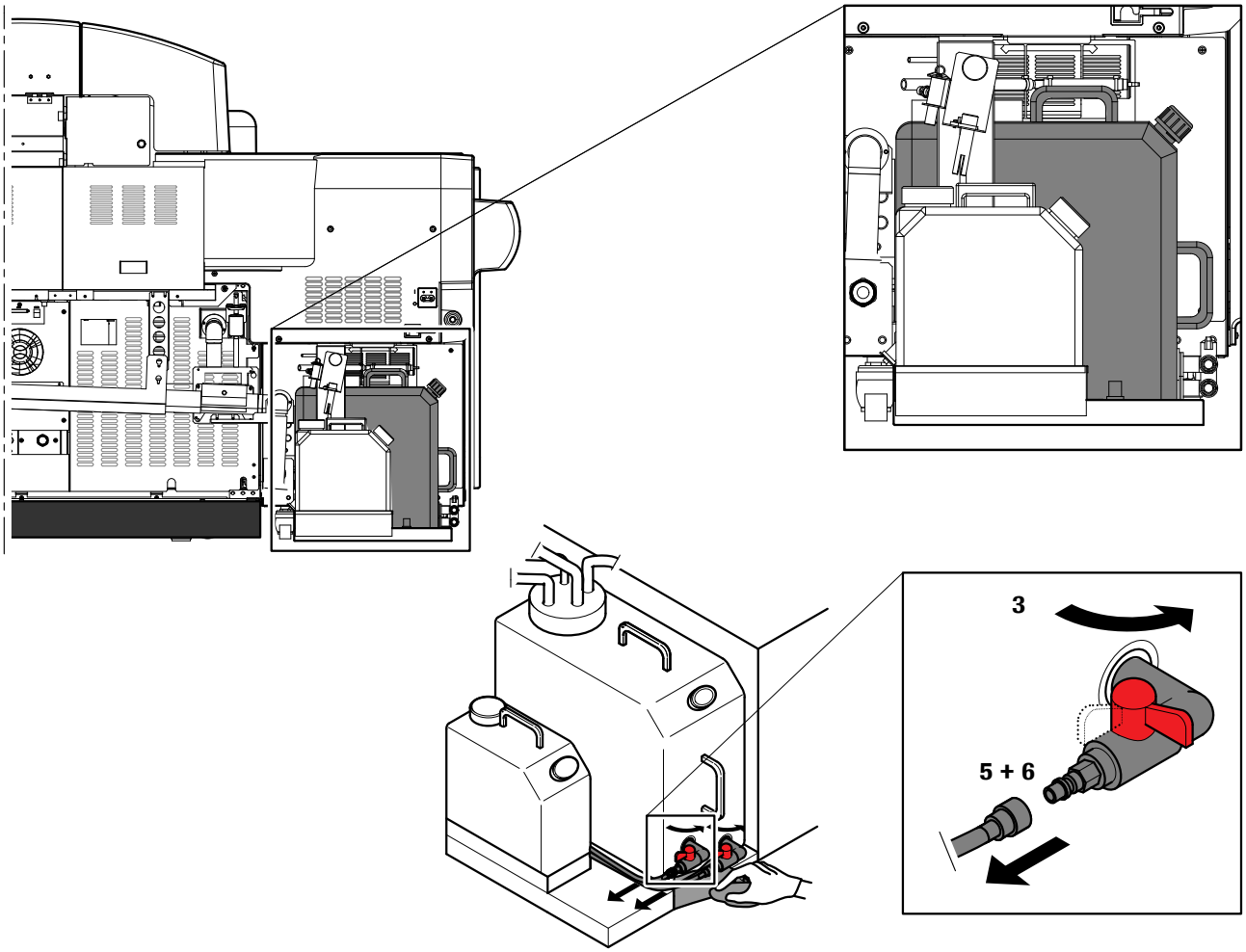

Figure C-16 Disconnecting the two joints of the water tank

3 Close the taps at the outlet of the water tank.

4 Place paper towels under the hose unit to absorb extra water.

5 Disconnect the quick release connector by rotating the release collar until it lines up with its key.

6 Pull back the spring-loaded collar to separate the water hose from the tank.

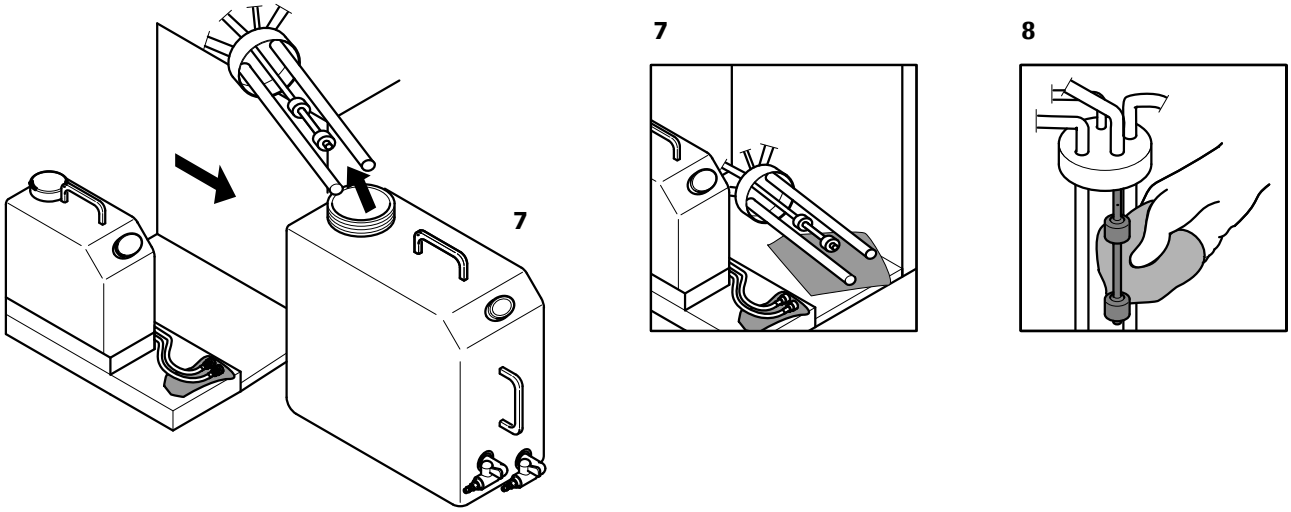

Figure C-17 Cleaning the liquid level sensor assembly of the water tank

CAUTION! The water tank can be heavy. If the tank is too heavy, pour out sufficient water until the tank becomes light to carry.

7 Pulling the water tank sideways, remove the liquid level sensor assembly from the tank and place it on a paper towel, then empty the water from the tank.

8 Wipe the liquid level sensor assembly with gauze pads soaked with deionized water.

9 Rinse the water tank thoroughly with deionized water three times.

If the water tank is considerably contaminated, follow the procedure below: *To thoroughly clean the water tank*. Otherwise, proceed as follows:

10 Fill the tank at least 1/3 full with deionized water.

11 Reattach the liquid level sensor assembly and place the tank to its original position.

12 Reconnect the water hose to the water tank and open the taps.

13 Ensure main water supply is on.

■

► To thoroughly clean the water tank

1. Rinse the tank thoroughly with 0.5% sodium hypochlorite solution. For thorough cleaning use a brush to clean the interior surface. Then wash with tap water to eliminate the detergent.
2. Rinse the tank thoroughly with deionized water 3 times.
3. Fill the tank at least 1/3 full with deionized water.
4. Reattach the liquid level assembly and place the tank to its original position.
5. Reconnect the water hose to the water tank and open the taps.
6. Ensure main water supply is on.
7. Switch on the analyzer.

■

Slip hazard due to leaking water

If the fittings of the water tank are not connected properly, water may leak.

- Ensure that all joints are connected properly.

Cleaning the filter of the rack sampler unit

Clean the filter at the rear of the rack sampler unit at least once a month to prevent dust or dirt accumulation.

Operator time approximately 5 minutes

Materials required ☐ Vacuum cleaner

► To clean the filter of the rack sampler unit

1 Put the analyzer in shutdown or standby status.

See *To shutdown the analyzer* on page C-6.

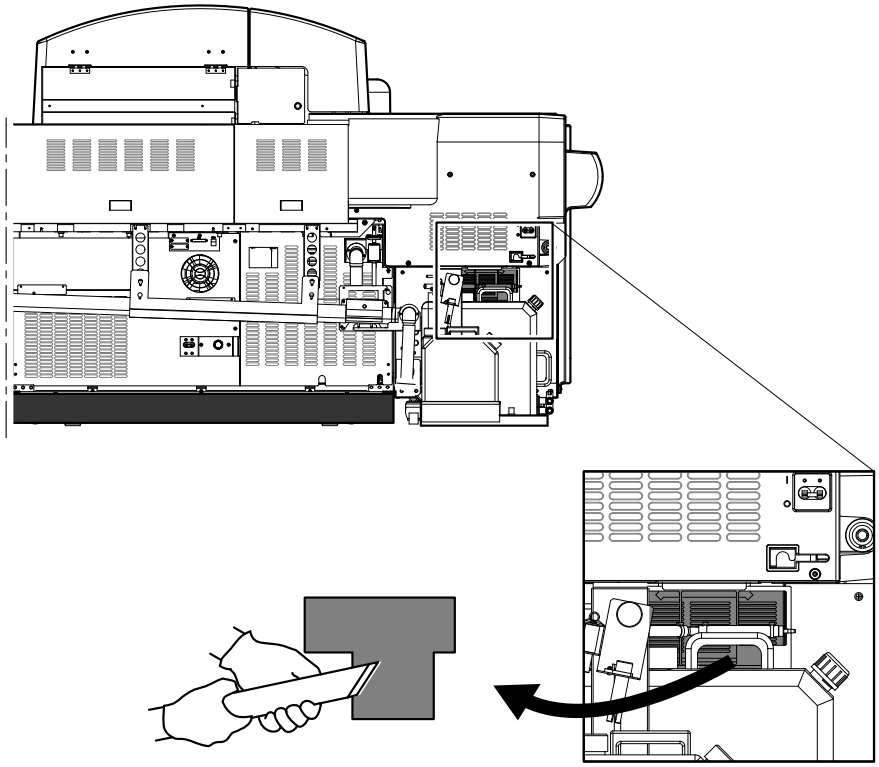

Figure C-18 Cleaning filter of rack sampler unit

2 Remove the filter of the rack sampler unit.

3 Vacuum dirt and other debris from the filter of the rack sampler unit.

4 Reattach the filter of the rack sampler unit.

5 Switch on the analyzer.

■

Every six months maintenance

In this section, you find all the maintenance for the **cu** 150 that must be performed at least once every six months.

This section discusses the following maintenance actions:
Cleaning the inlet water filter on page C-58
Cleaning the cooling fans on page C-60

Cleaning the inlet water filter

Clean the inlet water filter at least once every six months to prevent blockages of the water system.

Operator time approximately 5 minutes

Materials required
- ☐ Inlet water filter (in case replacement is required)
- ☐ Beaker, 500 mL
- ☐ Deionized water

► To clean the inlet water filter

1 Put the analyzer in shutdown status.

2 Close the water tap and halt the supply of water from the external deionized water supply.

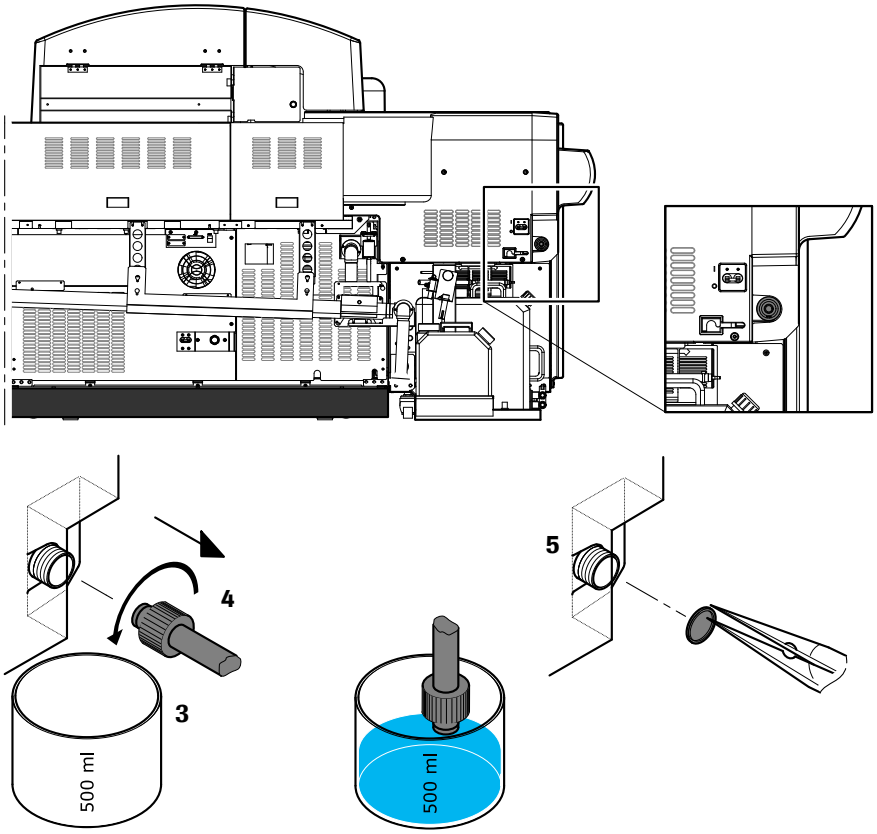

Figure C-19 Disconnecting inlet water hose and removing inlet water filter

3 Place a 500 mL beaker (or a similar type container) beneath the inlet water manifold.

4 Turn the knurled ring on the water filter cap counterclockwise and disconnect the inlet water hose.

5 Remove the water filter and place the hose in the beaker. Be careful not to tip the beaker.

6 Clean the filter thoroughly with deionized water, then reinstall the filter.

If necessary, replace the inlet water filter.

After cleaning, tighten the filter cap securely and make sure there is no water leakage.

NOTICE! Instrument damage due to loose tube sockets. Water leakage may occur. Reconnect the inlet water hose to the inlet water manifold accurately.

7 Reconnect the inlet water hose to the inlet water manifold.

8 Ensure the water supply is on, before you start up the analyzer again.

■

Cleaning the cooling fans

Clean the cooling fans at the rear of the **c** 501 and **e** 601 modules to remove dust and dirt.

Operator time approximately 5 minutes

Materials required
- ☐ Vacuum cleaner
- ☐ Brush

► To clean a cooling fan

1 Put the analyzer in shutdown status.

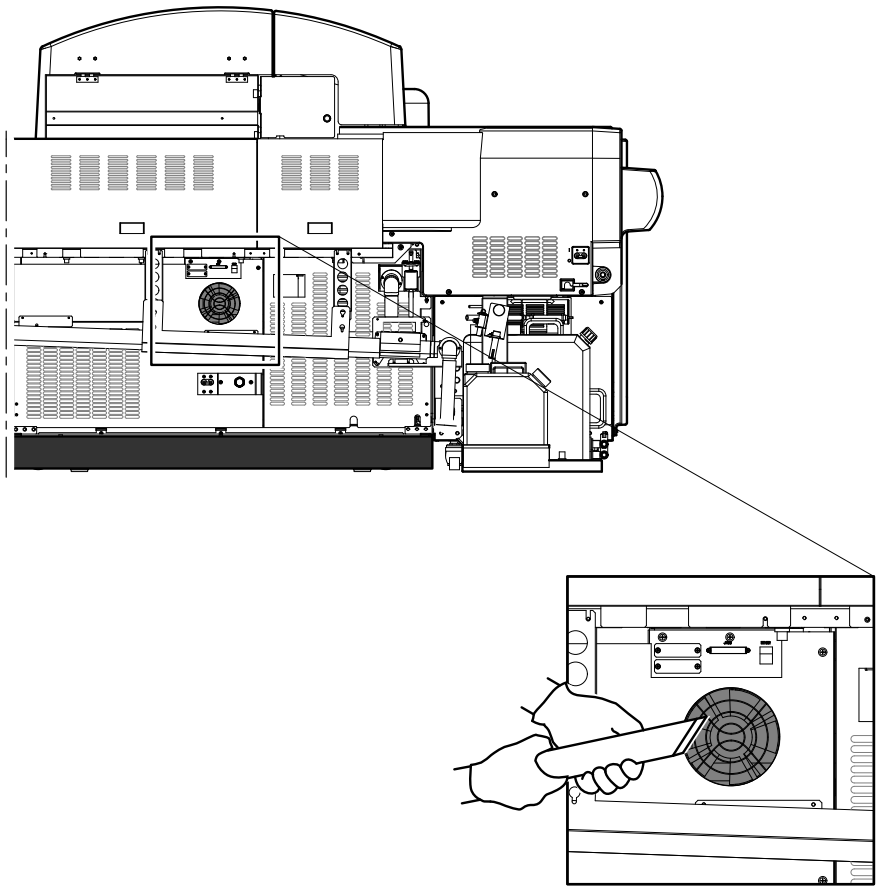

Figure C-20 Cleaning the cooling fans

2 Vacuum or brush dust, dirt, and other debris from all cooling fans on the back of each module.

3 Start up the analyzer.

■

As needed

In this section, you find all the maintenance for **cu** 150 that must be performed as needed and are not subject to a regular time schedule.

Cleaning instrument surfaces

Spills on the instrument surface could be potentially biohazardous and damage the surface.

Operator time approximately 5 minutes

Materials required
- ☐ Cloth or paper towels
- ☐ Laboratory disinfectant (no alcohol or bleach)

► **To clean instrument surfaces**

1. Put the analyzer in shutdown status or in standby.

   See *To shutdown the analyzer* on page C-6.

2. Clean the module surfaces using a cloth or paper towel moistened with disinfectant.

   Clean up all spills immediately. Use this procedure to ensure that surfaces are clean.

■

As needed

Cleaning rack surfaces

Spills on the racks could potentially be biohazardous and damage the racks or barcode labels. A dirty or damaged barcode label leads to barcode read errors.

If a rack is dirty, it is necessary to clean it using the procedure described below.

Materials required

- ☐ Deionized water
- ☐ 2% EcoTergent solution
- ☐ Lint-free gauze pads
- ☐ Cotton swabs

► To clean rack surfaces

1. Clean the surfaces of the rack with gauze pads or cotton swabs moistened with 2% EcoTergent solution.
   - Do not wipe the barcode label.
   - Do not bend or damage the spring clips.
2. Wipe off the EcoTergent solution with gauze pads moistened with deionized water.
3. Wipe off the deionized water with dry gauze pads.

■

► To clean barcode label

1. Clean the barcode label using gauze pads or cotton swabs moistened with 2% EcoTergent solution.
   - Only wipe the barcode label.
   - Do not wipe over the edges of the barcode label.

   If the barcode label is scrubbed repeatedly or liquid gets between the barcode label and the rack surface, the barcode label could be damaged.
2. Wipe off the EcoTergent solution with gauze pads moistened with deionized water.
3. Wipe off the deionized water with dry gauze pads.

■

► To check the rack and barcode

1 Check that the barcode and rack ID labels are completely fixed on the rack.

- The labels do not come off.

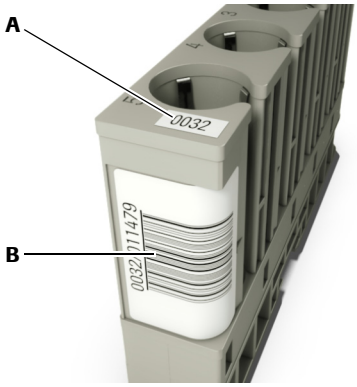

A Rack ID label **B** Barcode label

Figure C-21 Barcode and rack ID labels

2 Check that the rack is clean.

- No waste, lint, or over substances or objects are on or in the rack.
- The Hole IDs and square holes are free.

A Hole ID **B** Square hole

Figure C-22 Barcode and rack ID labels

■

Cleaning rack tray surfaces

Spills on the rack tray surface can be biohazardous. Clean up all spills.

⚠ WARNING

Personal injury due to the edges on the rack tray's center guide rail

The edges on the rack tray's center guide rail may cause personal injury.

- Avoid contact with all edges, even when wearing lab gloves.
- Wear protective equipment such as lab gloves.
- Carefully observe all instructions given in this addendum.

Materials required

- ☐ Alcohol (e.g. isopropyl alcohol or ethanol)
- ☐ Lint-free cloth
- ☐ Cotton swabs

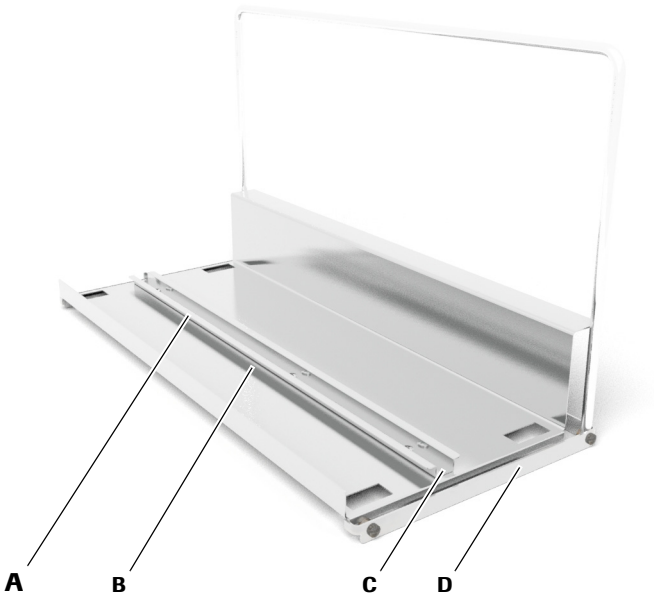

A Rail edge
B Rail groove
C Rail center
D Rack Tray

Figure C-23 Rack tray

► To clean rack tray surfaces

1 Remove the rack tray from the instrument.

2 Wipe the rail center in both directions with a cotton swab moistened with alcohol.

If there is sticking and crystallized dirt on the rack tray, scrape it with a cotton swab.

- Take care not to sustain injuries by coming into contact with the edges.

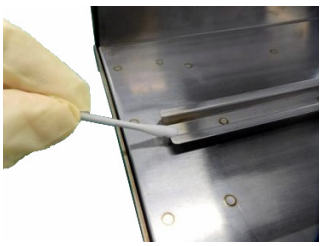

3 Wipe the rail edge in both directions with a cotton swab moistened with alcohol.

If there is sticking and crystallized dirt on the rack tray, scrape it with a cotton swab.

- Take care not to sustain injuries by coming into contact with sharp edges.

4 Wipe the rail groove in both directions with a cotton swab moistened with alcohol.

If there is sticking and crystallized dirt on the rack tray, scrape it with a cotton swab.

- Take care not to sustain injuries by coming into contact with sharp edges.

5 Wipe the edges on the bottom of the rack tray in both directions with a cotton swab moistened with alcohol.

If there is sticking and crystallized dirt on the rack tray, scrape it with a cotton swab.

- Take care not to sustain injuries by coming into contact with sharp edges.

6 Wipe the surface of the rack tray, starting from the center in both directions with an at least 10 mm thick pile of lint-free cloth moistened with alcohol.

Hold the rack tray with one hand, the pile of lint-free cloth with your fingers, and wipe the surface of the rack tray.

- Take care not to sustain injuries by coming into contact with sharp edges.

7 Wipe the rear surface of the rack tray, starting from the center in both directions with an at least 10 mm thick pile of lint-free cloth moistened with alcohol.

Hold the rack tray with one hand, the pile of lint-free cloth with your fingers, and wipe the surface of the rack tray.

- Take care not to sustain injuries by coming into contact with sharp edges.

8 Wipe the bottom surface of the rack tray, starting from the center in both directions with an at least 10 mm thick pile of lint-free cloth moistened with alcohol.

Hold the rack tray with one hand, the pile of lint-free cloth with your fingers, and wipe the surface of the rack tray.

- Take care not to sustain injuries by coming into contact with sharp edges.

9 Visually check the rack trays.

Make sure that there is no textile remaining on the rack tray.

Make sure that there are no wet areas on the rack tray.

■

Maintenance c 501 with ISE

This chapter describes the maintenance actions required for correct and efficient running of the **c** 501 module. The maintenance of both ISE unit and photometric unit is discussed. The schedule of required periodic maintenance actions (daily, weekly, monthly…) is provided as well as maintenance actions that are performed as needed.

Further maintenance actions, that can only be performed by specially trained operators, are required for a correct and efficient running of the **c** 501 module. These maintenance actions are described in a separate manual: *Interlock function cobas* **c** 501 *with ISE.*

In this chapter

Chapter **17**

Maintenance schedule C-69
Periodic replacement of parts C-71
Daily maintenance C-72
Processing green wash rack C-73
Preparing the wash rack and checking the number of cycles C-74
At the end of analysis each day C-75
During a continuous 24-hour shift C-75
Cleaning sample probe, reagent probes, ISE probe and ISE sipper nozzle C-77
Cleaning cell rinse nozzles C-79
Cleaning the drain port for high concentrated waste C-80
Weekly maintenance C-81
Cleaning the reaction system C-81
Cleaning the cell covers C-83
Cleaning the rinse stations C-85
Removing and manually cleaning the IS bath C-87
Monthly maintenance C-88
Cleaning the ISE Ref. (KCl) aspiration filter C-88
Replacing reaction cells C-90
Cleaning the incubator bath C-92
Cleaning the detergent aspiration filters C-98
Cleaning the filters behind the front doors C-100
Every three months maintenance C-102
Cleaning the ultrasonic mixers C-102
Every six months maintenance C-105
Replacing the photometer lamp C-105

As needed maintenance C-110
Cleaning the ISE Ref. (KCl) aspiration filter C-110
Cleaning the detergent aspiration filters C-110
Replacing nozzle tips on cell rinse nozzles C-110
Cleaning the ultrasonic mixers C-112
Replacing the photometer lamp C-112
Draining the vacuum tank C-113
Cleaning instrument surfaces C-114
Extended Power OFF procedures C-115
Power OFF 1 ..... C-115
Power OFF 2 ..... C-116
Power ON procedures (after Extended Power OFF) C-116

Maintenance schedule

The intervals for maintenance and checkup recommended in this document are independent of the system operation time unless otherwise noted (e g. maintenance actions which are based on test count or time).

PO	Power OFF
SB	Stand by
CIB	Cleaning Incubator Bath
CLSL	Change Light Source Lamp

Interval	Procedure	Mode	Operator time (min)	System time (min)	Page
Daily	Processing green wash rack		5	15[(a)]	C-73
	Cleaning sample probe, reagent probes, ISE probe and ISE sipper nozzle	SB/PO	2		C-77
	Cleaning cell rinse nozzles	SB/PO	2		C-79
	Cleaning the drain port for high concentrated waste	SB/PO	1		C-80
Weekly	Cleaning the reaction system	SB	2	55	C-81
	Cleaning the cell covers	SB/PO	5		C-83
	Cleaning the rinse stations	SB/PO	5		C-85
	Removing and manually cleaning the IS bath	SB/PO	5		C-87
Monthly	Cleaning the ISE Ref. (KCl) aspiration filter	SB/PO	5	3	C-88
	Replacing reaction cells	CIB/SB/PO	10	55	C-90
	Cleaning the incubator bath	CIB/PO	15	25	C-92
	Cleaning the detergent aspiration filters	SB/PO	5	7	C-98
	Cleaning the filters behind the front doors	SB/PO	10		C-100
Every 3 months	Cleaning the ultrasonic mixers[(c)]	CIB	6	7	C-102
Every 6 months[(b)]	Replacing the photometer lamp[(d)]	CLSL/PO	5	20	C-105
As needed[(b)]	Cleaning the ISE Ref. (KCl) aspiration filter	SB/PO	5	3	C-110
	Cleaning the detergent aspiration filters	SB/PO	5	7	C-110
	Replacing nozzle tips on cell rinse nozzles	SB/PO	6		C-110
	Replacing the photometer lamp[(d)]	CLSL/PO	5	20	C-112
	Cleaning the ultrasonic mixers[(c)]	CIB	6	7	C-112
	Draining the vacuum tank	SB/PO	5		C-113
	Cleaning instrument surfaces	SB/PO	5		C-114

Table C-23 Maintenance schedule **c** 501

(a) When **Green Rack during Operation** is enabled for a 24 hour shift

(b) All maintenance actions described as 6 monthly or as needed can be covered by appropriate service contract actions.

(c) Every 3 months or after 225.000 tests (whatever comes first)

(d) Every 6 months, after 750 hours or if the photometer check value exceeds 14000 (whatever comes first)

Create a maintenance schedule, which is customized to your laboratory's individual requirements. We recommend letting the analyzer's software remind the operator of all periodic maintenance tasks. You can do this by configuring maintenance types (from **Utility** > **System** (**Page 2/4**) > **Maintenance Setting**). Within a maintenance type, you can assign maintenance intervals (**Period**) and warning levels to each maintenance item and maintenance pipe.

For more information on scheduling maintenance tasks, see *Maintenance types—scheduling and tracking maintenance items* on page C-9.

Periodic replacement of parts

Some parts require periodic replacement for preventive maintenance. Replace these parts regularly and in accordance with your workload and the recommendations given in this document.

ISE unit

Item	2 months	3 months	6 months	As needed	Reference
ISE measuring cartridges[(a)(b)] (Na^+, K^+, Cl^-)	x			x	[(a)]
ISE reference cartridge[(a)]			x		[(a)]
ISE sipper tubing[(a)]		x		x	[(a)]
ISE pinch valve tubing[(a)]		x		x	[(a)]
Syringe seals of ISE pipetter and ISE sipper[(c)]				x	[(c)]

Table C-24 Periodic replacement of parts for **c** 501 ISE unit

(a) Can only be done by specially trained operators
(b) Every 2 months or after 9000 samples (whatever comes first)
(c) Can only be done by a Roche service representative

Photometric unit

Item	Monthly	3 months	6 months	As needed	Reference
Reaction cells	x				C-90
Photometer lamp[(a)]			x	x	C-105
Syringe seals of sample probe and reagent probes[(b)(c)]			x	x	[(c)]

Table C-25 Periodic replacement of parts for **c** 501 photometric unit

(a) Every 6 months or after 750 hours, or if the photometer check exceeds 14000 (whatever comes first)
(b) Every 6 months or after 225.000 tests (whatever comes first)
(c) Can only be done by a Roche service representative

Incorrect results due to improper spare parts

For proper instrument care use only original spare parts provided by Roche Diagnostics.

- The necessary spare parts are listed in the description of the corresponding maintenance action.
- To order spare parts, please contact your Roche service representative.

Daily maintenance

In this section, you find all the maintenance for the **c** 501 module that must be performed every day.

This section discusses the following maintenance actions:
Processing green wash rack on page C-73
Cleaning sample probe, reagent probes, ISE probe and ISE sipper nozzle on page C-77
Cleaning cell rinse nozzles on page C-79
Cleaning the drain port for high concentrated waste on page C-80
Cleaning instrument surfaces on page C-114

Contamination of flow paths or pipetter probes may cause incorrect measurement results or blockages. Therefore, make sure to regularly perform the stated maintenance procedures.

Processing green wash rack

A green wash rack containing detergents and Activator must be processed once every 24 hours as described below.

Normally the green wash rack is processed at the end of analysis each day.

See *At the end of analysis each day* on page C-75.

If your **cobas** 6000 analyzer operates continuously during a 24-hour shift, the green wash rack must be processed once every 24 hours.

See *During a continuous 24-hour shift* on page C-75.

Operator time approximately 5 minutes

System time approximately 15 minutes during a 24-hour shift

Materials required

- ☐ Green rack (wash rack)
- ☐ Sample Cleaner 1, 400 µL (5 cycles) per **c** 501 module
- ☐ SysClean, 300 µL (15 cycles) per **c** 501 module
- ☐ Activator, 300 µL (15 cycles) per **c** 501 module

ISE reagent consumption

Approximately 18 mL internal standard (ISE IS)

Approximately 7 mL diluent (ISE Dil.)

Approximately 2 mL reference electrode solution (ISE Ref.)

⚠ CAUTION

Incorrect patient results due to shortage of ISE conditioning solution (Activator) or ISE cleaning solution (SysClean)

If the amount of Activator or SysClean is not sufficient or the sample cup containing the Activator or SysClean is missing or in an incorrect position, the conditioning or cleaning of the ISE cannot be completed.

- Fill a sufficient amount of Activator and SysClean into sample cups.
- Place the sample cups in the correct position of the green wash rack.
- If an alarm due to insufficient volume of these solutions is issued, all ISE samples measured after the alarm must be rerun.

⚠ CAUTION

Incorrect results due to wrong calibration

After processing a green wash rack all ISE tests must be calibrated.

- P-mask the ISE before running the green wash rack during operation.

For information about P-masking, see *T-masking and P-masking* on page B-241.

- Do not load samples with ISE requests before you have checked the calibration and QC results for ISE.

If the processing of the green wash rack is interrupted for some reason, perform the following maintenance items:

- **(7) Wash Reaction Parts**
- **(8) Reagent Prime** (All)

Preparing the wash rack and checking the number of cycles

This section describes how to prepare the wash rack.

► To prepare the wash rack

1 Place sample cups at positions 1 to 3 on a green rack (wash rack) and fill suitable amounts of Sample Cleaner 1, ISE cleaning solution (SysClean), and Activator into the sample cups as shown in the figure below.

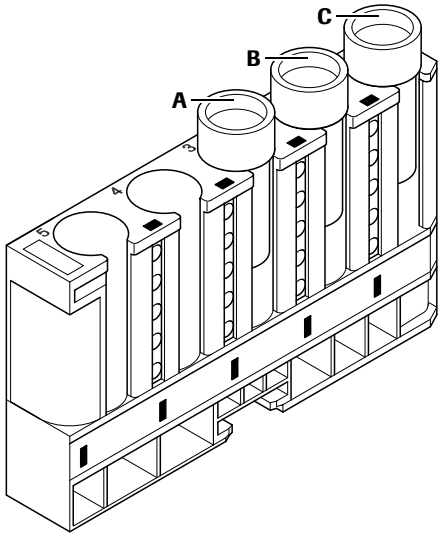

E Activator (for conditioning) **F** SysClean **G** Sample Cleaner 1

Figure C-24 Green rack with reagents for daily ISE maintenance

- Position 1: Sample Cleaner 1, 400 µL (5 cycles) per **c** 501 module
- Position 2: ISE cleaning solution (SysClean), 300 µL (15 cycles) per **c** 501 module
- Position 3: Activator 300 µL (15 cycles) per **c** 501 module

Unless sample cups are positioned as instructed, neither sampling nor rinsing will be conducted.

2 Check the number of cycles for detergent pipetting:

- Choose **Utility** > **System**
- If necessary, change the number of cycles for both Photometric and ISE under **Wash Rack Sampling** (recommended are 5 cycles for Photometric and 15 for ISE).
- Choose **OK** to save the settings.

■

At the end of analysis each day

This section describes how to clean sample flow paths and ISE electrodes.

► To clean sample flow paths and ISE electrodes

1. Place the wash rack on the rack loader.

   For more information, see *To prepare the wash rack* on page C-74.

2. Choose **Start** (global button) and **Start** on the **Start Conditions** screen.

   If the analyzer is already in operational status, skip this step.

3. Perform a full calibration of the ISE unit.

   For details on how to calibrate the ISE unit, see *Requesting and cancelling calibrations manually* on page B-171.

■

For labs not running 24 hours per day, Roche Diagnostics recommends performing the cleaning of the flow paths and conditioning of the electrodes within a sleep pipe. Then the system will go to sleep mode after the sleep pipe with green wash rack is performed.

See *Sleep Pipe function with green wash rack* on page C-17.

During a continuous 24-hour shift

The analyzer offers a function to process a green wash rack in operation during a continuous 24-hour shift.

The **Green Rack during Operation** function is activated under **Utility** > **System** (**Page 3/4**) > **Rack Delivery**.

See *Green Rack during Operation* on page B-290.

Notes for working with the Green Rack during Operation function

- The analyzer must not be in standby to process a green wash rack when this function is activated.
- Since the analyzer is still processing samples, it is possible to load any other rack together with the green wash rack. In this case only photometric and immunological tests are processed on the **c** 501 module or the **e** 601 module.
- Therefore during processing of the green wash rack do not load any sample with ISE requests because ISE tests are P-masked. If you load samples with ISE requests, the ISE requests cannot be processed until the green wash rack is finished.
- Samples with open ISE requests that were registered before masking the ISE tests will be unloaded after masking the ISE tests. You have to reload these samples after processing the green wash rack.
- It is recommended to process the green wash rack immediately before your periodic calibration during a continuous 24-hour shift.

► To process a green wash rack on a analyzer with one c 501 module

1. P-mask the ISE tests on the **Masking** window (**Start** (global button) > **Masking**).
2. Request a full calibration for all ISE tests on the **Calibration Status** screen.

   See *Requesting and cancelling calibrations manually* on page B-171.
3. Place the racks in the following sequence on the rack loader:
   - Green wash rack.

     For more information, see *To prepare the wash rack* on page C-74.
   - Calibrator rack containing the ISE calibrators.
   - QC rack containing the QCs for ISE tests.
4. Choose **Start** (global button) and **Start** on the **Start Conditions** screen.
5. Check the results for calibration and QC.
6. If the analyzer has generated a valid calibration and the QC results are okay, unmask the ISE tests.

■

The analyzer is ready to process routine samples.

► To process a green wash rack on a analyzer with two c 501 modules

1. P-mask the ISE tests for both **c** 501 modules on the **Masking** window (**Start** (global button) > **Masking**).
2. Request a full calibration for both **c** 501 modules for all ISE tests on the **Calibration Status** screen.

   See *Requesting and cancelling calibrations manually* on page B-171.
3. Place the green wash rack on the rack loader.

   For more information, see *To prepare the wash rack* on page C-74.
4. Choose **Start** (global button) and **Start** on the **Start Conditions** screen.
5. Wait until the green wash rack is in the rack unloader.
   - Load a calibrator rack containing the ISE calibrators.
   - Load a QC rack containing the QCs for ISE tests.
6. Choose **Start** (global button) and **Start** on the **Start Conditions** screen.
7. Check the results for calibration and QC.
8. If the analyzer has generated a valid calibration and the QC results are okay, unmask the ISE tests.

■

The analyzer is ready to process routine samples.

If you load the ISE calibrator and QC racks before the green wash rack is in the rack unloader, the green wash rack is processed on the first **c** 501 module. The calibrator and QC racks are processed on the second **c** 501 module previous to the green wash rack.

The thus obtained calibration is no longer valid, after the green wash rack has been processed on the second **c** 501 module.

Cleaning sample probe, reagent probes, ISE probe and ISE sipper nozzle

At the end of analysis each day, clean the outside of the pipetter probes (sample probe, reagent probes, ISE probe) and of the ISE sipper to remove residual solution and precipitation. This is a combined maintenance procedure for both ISE and photometric unit.

When sample aspiration error occurs frequently or if an alarm for blockages of the sample probe occurs and is not reset after cleaning (maintenance item **(12) Sample Probe Wash**), the sample probe must be detached and blockages must be eliminated.

Pipetter probes must be replaced, when they are bent or damaged. Detaching the sample probe and elimination of sample blockages must only be done by specially trained operators. Positional adjustment is required after reattaching the probe.

For more information refer to the separate maintenance manual *Interlock function cobas c 501 with ISE*.

Operator time approximately 2 minutes

Materials required
- ☐ Alcohol (e.g. isopropyl alcohol or ethanol)
- ☐ Lint-free gauze pads

Damage to the probes

Do not bend or damage the lower end of the probes during cleaning. Move the arm gently. Do not move it up and down.

► To clean the outside of sample probe, reagent probes, ISE probe and ISE sipper nozzle

1. Put the analyzer in shutdown status or the module in standby.
2. Unlock and open the top cover of the module.

   For a description of the analyzer parts referred to in this section, see Figure C-25 on page C-78.

   The pipetter probes (**A**, **C**, **F**) and sipper nozzle (**E**) can be easily moved by hand to an accessible position.

   Use a new lint-free gauze pad for each probe to prevent cross contamination.

3. Wipe (from top to bottom) the outsides of the sample, reagent and ISE probes and the sipper nozzle with gauze pads moistened with alcohol.
4. Also wipe the inside of the shield pipe (**B**) with a gauze pad moistened with alcohol.
5. Close the top cover of the module and lock it.
6. Switch on the analyzer, if the analyzer is in shutdown status.

■

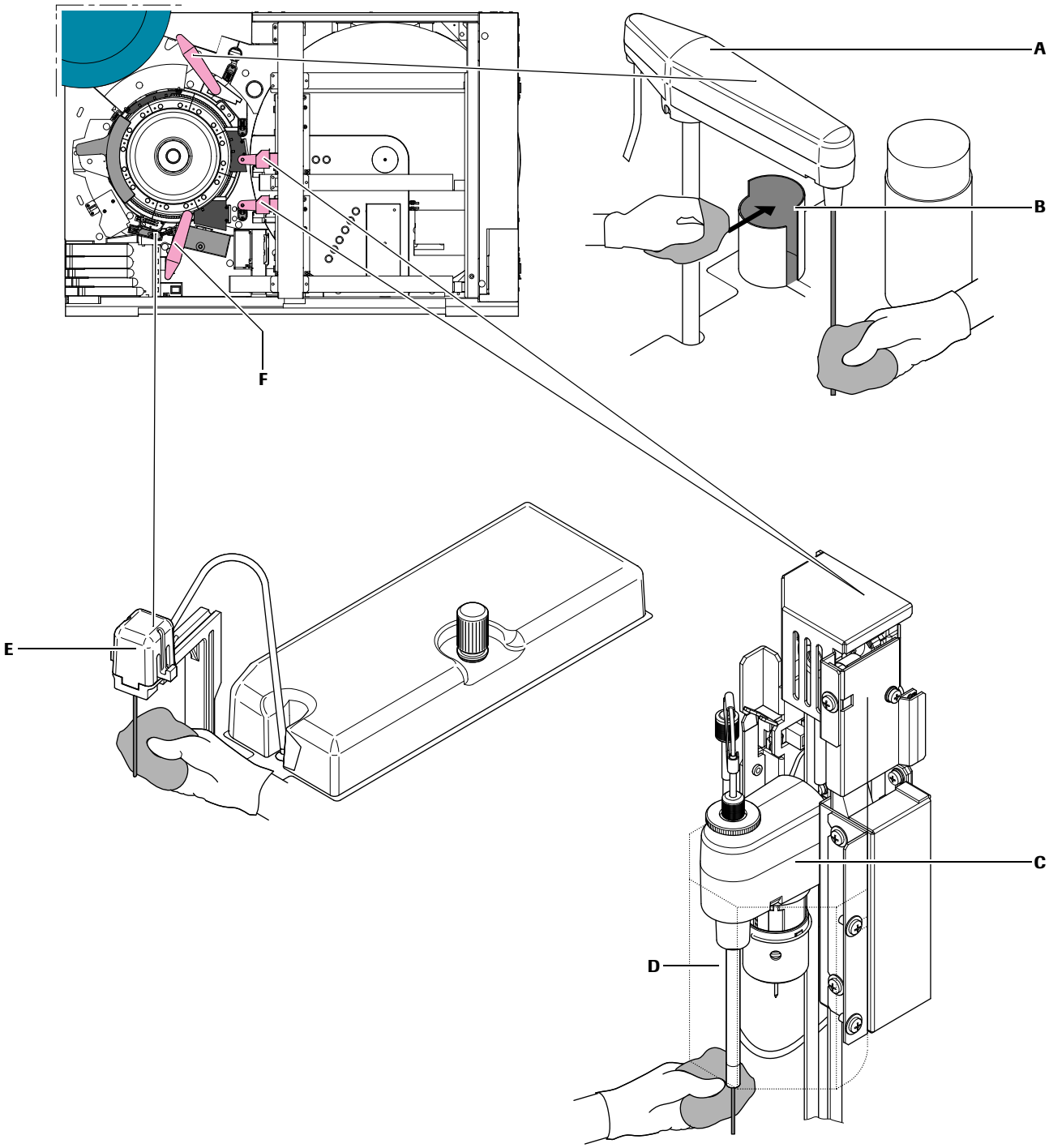

A	Sample probe	**C**	Reagent 1/2 probe	**E**	ISE sipper
B	Shield pipe	**D**	Plexiglas cover	**F**	ISE probe

Figure C-25 Cleaning the outside of sample probe with shield pipe, reagent probe, ISE probe and sipper

Cleaning cell rinse nozzles

At the end of analysis each day, clean the cell rinse nozzles. Regular cleaning prevents contamination, crystal formation, and blockages.

Operator time approximately 2 minutes

Materials required
- ☐ Deionized water
- ☐ Lint-free gauze pads
- ☐ Cleaning wire of 0.5 mm diameter (stainless steel)

► To clean the cell rinse nozzles

1. Put the analyzer in shutdown status or the module in standby.
2. Unlock and open the top cover of the module.

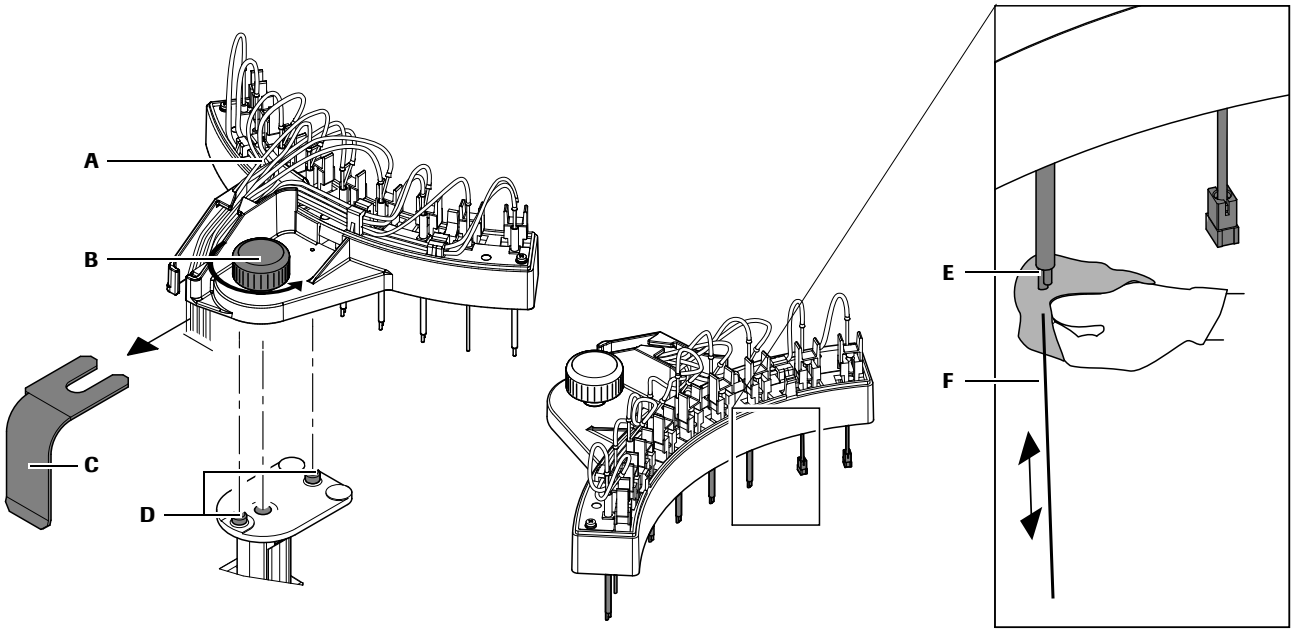

A Cell rinse unit
B Retaining screw
C Tube retainer
D Guide pins
E Nozzle tip
F Probe cleaning wire

Figure C-26 Dismount the cell rinse unit and clean the cell rinse nozzles

3. Loosen the retaining screw (**B**) of the cell rinse unit and lift off the entire unit (**A**).
4. Moisten a lint-free gauze pad with deionized water and gently wipe all tips (**E**) of the cell rinse unit nozzles in a downward motion.
5. If a nozzle is clogged, insert the probe cleaning wire (**F**) (stainless steel wire, 0.5 mm diameter) into the tip of the nozzle and eliminate the blockages.
6. Align the pin holes of the cell rinse unit with the guide pins (**D**) and attach the rinse unit.
7. Fix the tube retainer (**C**) below the screw and then tighten the retaining screw.
8. Close the top cover of the module and lock it.
9. Switch on the analyzer, if the analyzer is in shutdown status.

■

Cleaning the drain port for high concentrated waste

At the end of analysis each day, clean the outlet of the drain port for high concentrated waste. Regularly perform this maintenance to prevent the accumulation of crystals and blockages of the drain port.

Operator time approximately 1 minute

Materials required
- ☐ Cotton swabs
- ☐ Deionized water

► **To clean the outlet of the drain port for high concentrated waste**

1. Put the analyzer in shutdown status or the module in standby.
2. Apply deionized water to the outlet of the drain port at the rear of the module and rinse off crystals using cotton swabs.
3. Switch on the analyzer, if the analyzer is in shutdown status.

■

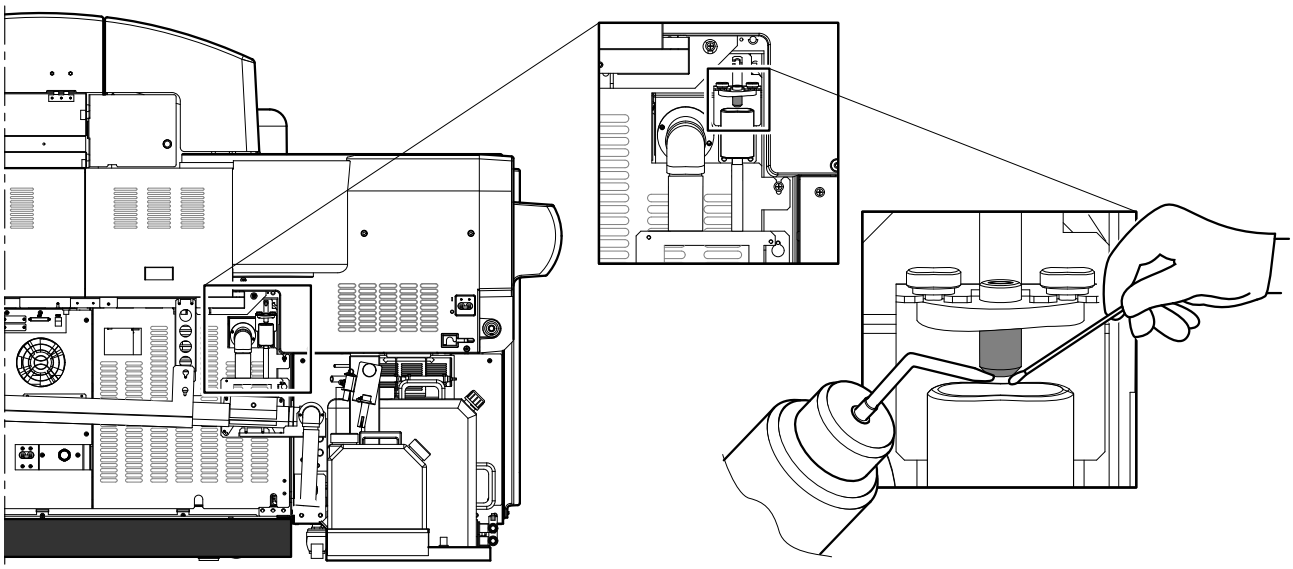

Figure C-27 Cleaning the drain port for high concentrated waste

Weekly maintenance

In this section you find all the maintenance for the **c** 501 module that must be performed at least once a week.

This section discusses the following maintenance actions:
Cleaning the reaction system on page C-81
Cleaning the cell covers on page C-83
Cleaning the rinse stations on page C-85
Removing and manually cleaning the IS bath on page C-87

Cleaning the reaction system

Contamination of the reaction cells or the waste solution flow path will result in incorrect measurement results. Wash the reagent probe and reaction cells at least once a week.

For instructions on how to remove reaction cells, see *Replacing reaction cells* on page C-90.

After rinsing the reaction system, perform a cell blank measurement to monitor the condition of the reaction cells.

Operator time approximately 2 minutes

System time approximately 55 minutes

This maintenance comprises the following procedures and maintenance items:

1. To rinse the reaction system (maintenance item **(7) Wash Reaction Parts**)
2. To perform a cell blank measurement (maintenance item **(4) Cell Blank Measurement**)
3. To view the cell blank measurement results

► To rinse the reaction system

1 Put the module in standby.

2 Select the **c** 501 module on the **System Overview** screen and choose **Reagent Overview**.

3 On the **Reagent** > **Status** screen, check the remaining amounts of detergents for reaction cells, reagent probe and sample probe. If inadequate, add a new detergent bottle or cassette.

Detergent	Reagent	Consumption
Sample probe detergent	Sample Cleaner 1	approximately 1 mL
Reagent probe and reaction cell detergent	NaOH-D cassettes (application code 947)	approximately 58 mL

Table C-26 Detergent consumption

4 Choose **Utility** > **Maintenance**.

5 Choose **Maintenance** (1) on the **Maintenance Types** list on the left.

6 Choose **(7) Wash Reaction Parts** on the **Maintenance** Items list on the right.

7 Choose **Select** to open the **Wash Reaction Parts** window.

8 Select a module. Selected modules are highlighted.

9 Choose **Execute**.

The procedure is finished when the module returns to standby.

Now, proceed with the cell blank measurement.

■

► To perform a cell blank measurement

1 Choose **Utility** > **Maintenance**.

2 Choose **(4) Cell Blank Measurement** on the **Maintenance** Items list on the right.

3 Choose **Select**, to open the **Cell Blank Measurement** window.

4 Select a module. Selected modules are highlighted.

5 Choose **Execute**.

■

After performing a cell blank measurement, the corresponding report can be viewed directly on the **Print View** window.

► To view the cell blank measurement results

1. Choose **Print** (global button).
2. Choose **View** to display the **Print View** window.

   This window shows a short form of the **Cell Blank Measurements** report. In this short report, the cell blank values of the first cuvette are shown. This indicates that the cell blank was successful.

   If an abnormal cell list is displayed below the cell blank values of the first cuvette, the cell blank failed. The cells listed did not compare to cell 1. These cells need to be inspected and the Cell Blank must be performed again.

■

```
                                Cell Blank Measurements                 04/12/08      18:25
MODULE   C1
-----------------------------      ABORMAL CELL LIST      ----------------------------------

27/11/08   17:03 -------------       WAVELENGTH (nm)       ----------------------------------
CELL NO.      340    376    415    450    480    505    546    570    600    660    700    800

     001   10392   9806   9625   9393   9388   9230   9065   9075   8988   8838   8716   8543
     002   10422   9817   9639   9408   9403   9244   9079   9085   8997   8847   8726   8554
     003   10429   9843   9660   9425   9421   9262   9099   9107   9021   8872   8749   8568
     004   10522   9917   9721   9481   9472   9310   9139   9142   9053   8898   8772   8588
     005   10379   9798   9612   9382   9380   9222   9060   9068   8981   8833   8711   8532
     006   10421   9827   9641   9408   9404   9244   9079   9084   8998   8848   8725   8549
     007   10400   9817   9628   9395   9392   9233   9068   9076   8990   8840   8719   8540
     008   10503   9894   9694   9452   9440   9277   9105   9110   9020   8865   8741   8558
     009   10500   9896   9692   9449   9437   9274   9102   9108   9017   8863   8737   8551
     010   10509   9898   9703   9461   9452   9289   9119   9122   9033   8878   8753   8573
```

Figure C-28 Cell Blank Measurements report

For more information, see *To replace reaction cells* on page C-91
and refer to the *Online Help* of the Cell Blank Measurements report (Print > Utility > Cell Blank).

Cleaning the cell covers

Clean the cell covers of the reaction cells at least once a week. The cell covers serve to prevent contamination by reagent and reaction solution. If reagent adheres to the front or rear face of a cell cover, the analytical accuracy may decrease.

Operator time approximately 5 minutes

Materials required
- ☐ Cotton swabs
- ☐ Lint-free gauze pads
- ☐ Alcohol (e.g. isopropyl alcohol or ethanol)

► To clean the cell covers

1 Put the analyzer in shutdown status or the module in standby.

2 Unlock and open the top cover of the module.

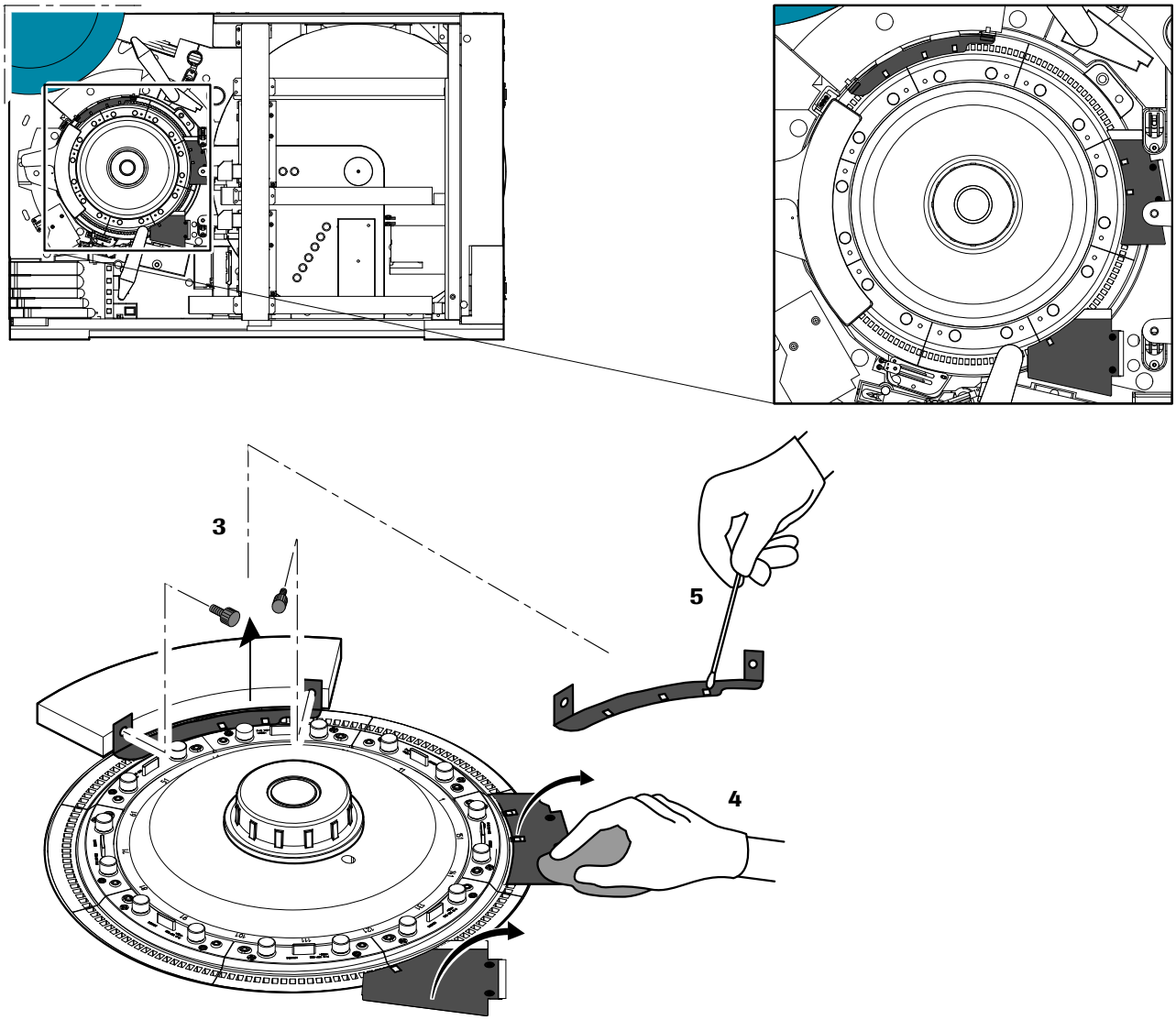

Figure C-29 Cleaning the cell covers

3 Loosen the screws and remove the cell cover above the ultrasonic mixers.

4 Wipe the front and rear faces of the cell covers using a gauze pad moistened with alcohol.

5 Wipe the openings of cell covers using a cotton swab moistened with alcohol.

Be careful not to splash alcohol in the reaction cells.

6 Return the cell cover above the ultrasonic mixers.

7 Close the top cover of the module and lock it.

8 Switch on the analyzer, if the analyzer is in shutdown status.

■

Cleaning the rinse stations

Clean the rinse stations of the sample probe, reagent probes, ISE probe and ISE sipper nozzle at least once a week, to prevent bacterial growth or precipitation that may clog the rinse stations.

Operator time approximately 5 minutes

Materials required
- ☐ Wash bottle
- ☐ Cotton swabs
- ☐ 2% EcoTergent solution
- ☐ Deionized water
- ☐ Alcohol (e.g. isopropyl alcohol or ethanol)

► **To clean the rinse station**

1 Put the analyzer in shutdown status or the module in standby.

2 Unlock and open the top cover of the module.

3 Move the sample probe, reagent probes, ISE probe and ISE sipper nozzle to positions that leave the rinse stations easily accessible.

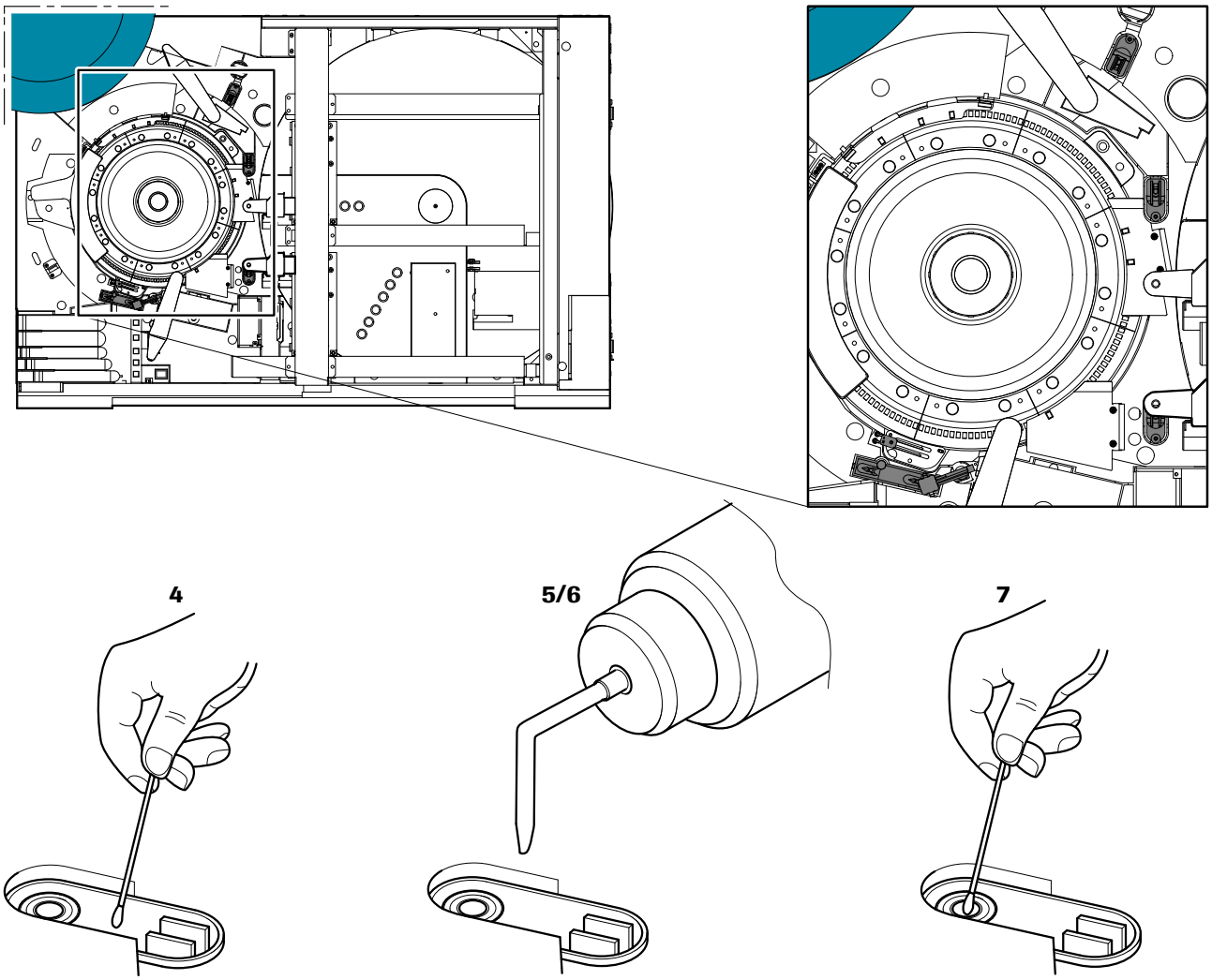

Figure C-30 Cleaning rinse stations of sample probe, reagent probe, and ISE probe

4 Using cotton swabs moistened with 2% EcoTergent solution, clean the inside of each rinse station.

5 Inject about 10 mL of 2% EcoTergent solution to each of the rinse stations.

Be careful not to splash water on the drying cylinder (for vacuum suction).

6 Inject about 100 mL of deionized water to each of the rinse stations to rinse them.

7 Wipe the drying cylinder (used for vacuum suction in the sample probe rinse station) with cotton swabs moistened with alcohol.

8 Close the top cover of the module and lock it.

9 Switch on the analyzer, if the analyzer is in shutdown status.

■

Removing and manually cleaning the IS bath

Crystals may remain on the upper part of the IS bath even after daily automatic rinsing. Therefore, remove and manually clean the IS bath once a week.

We recommend combining this maintenance with the monthly cleaning of the incubator bath. This allows the incubator bath to be cleaned below the IS bath.

See *Cleaning the incubator bath* on page C-92.

Operator time approximately 5 minutes

Materials required ☐ Deionized water

► To remove and manually clean the IS bath

1 Put the analyzer in shutdown status or the module in standby.

2 Unlock and open the top cover of analyzer.

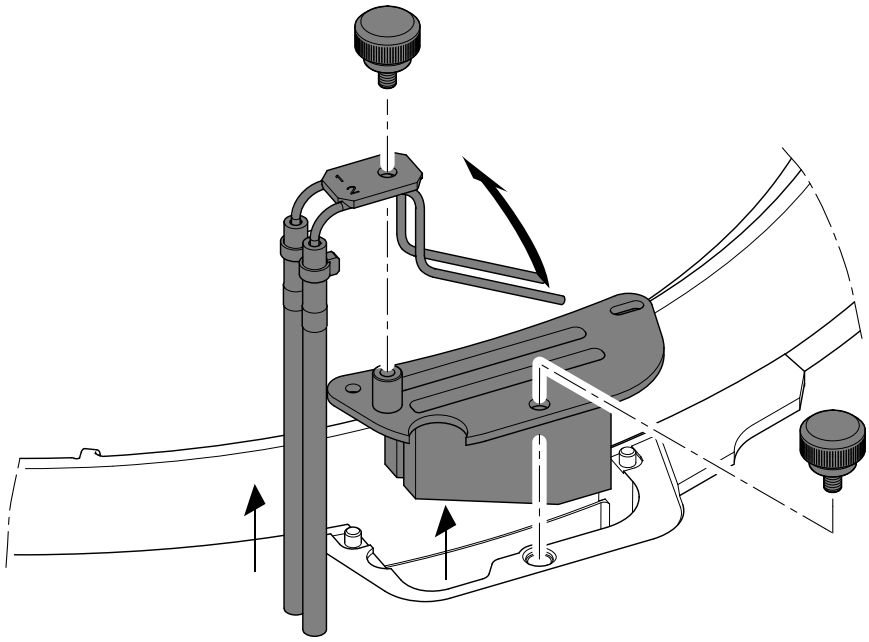

Figure C-31 Removing and cleaning the IS bath

3 Loosen the screws and remove the IS bath.

4 Wash away any crystals or contamination in the IS bath with deionized water.

5 Drain the water from the IS bath and then attach it in the analyzer.

6 Close the top cover of the module and lock it.

7 Switch on the analyzer, if the analyzer is in shutdown status.

■

Monthly maintenance

In this section, you find all the maintenance for the **c** 501 module that must be performed at least once a month.

This section discusses the following maintenance actions:
Cleaning the ISE Ref. (KCl) aspiration filter on page 88
Replacing reaction cells on page C-90
Cleaning the incubator bath on page C-92
Cleaning the detergent aspiration filters on page C-98
Cleaning the filters behind the front doors on page C-100

Cleaning the ISE Ref. (KCl) aspiration filter

Inspect the ISE Ref. aspiration filter, which is attached to the tube end in the ISE reference solution bottle. Clean the filter each time you replace the bottle but at least once a month. Blockages of the filter will reduce the accuracy of ISE Ref. aspiration and data reliability.

This maintenance comprises the following procedures and maintenance items:

1. To clean the ISE Ref. aspiration filter
2. To prime the ISE Ref. tubing

Operator time approximately 5 minutes

System time approximately 3 minutes

Materials required
- ☐ Deionized water
- ☐ Paper towel

► To clean the ISE Ref. aspiration filter

1 Put the analyzer in shutdown status or the module in standby.

2 Unlock and open the top cover of the module.

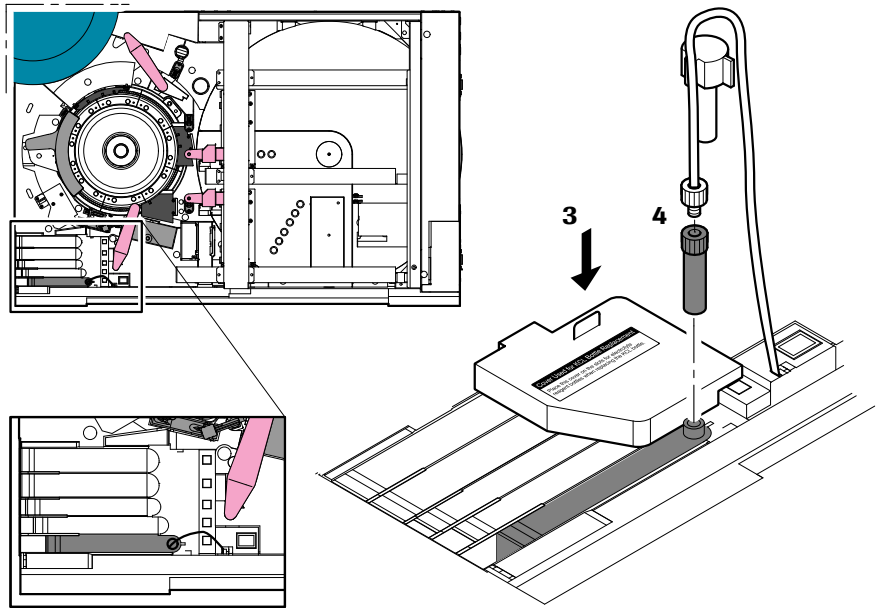

Figure C-32 Cleaning the ISE Ref. aspiration filter

CAUTION! Liquid from the tip of the tube may drop into another ISE reagent and may lead to false results. Place the dedicated cover over the ISE reagent bottles.

3 Attach the dedicated cover.

4 Remove the tubing from the ISE Ref. bottle and unscrew the filter from the tube end.

5 Clean and rinse the filter with deionized water.

6 Finally, screw the filter on the tube end and place it back into the bottle.

Make sure that the end of the tube touches the bottom of the bottle. Otherwise, reagent may not be pipetted properly.

7 Clean any spills of ISE Ref. from the surface of the instrument, using paper towels.

Damage to the ISE probe

If the dedicated cover for the ISE reagent bottles is in place during operation, the ISE pipetter probe will be damaged.

- Before starting operation, remove the dedicated cover for the ISE reagent bottles.

8 Remove the dedicated cover from the ISE reagent bottles.

9 Close the top cover of the module and lock it.

10 Switch on the analyzer, if the analyzer is in shutdown status.

After replacing the ISE Ref. aspiration filter, it is important to perform a reagent prime (maintenance item (8) Reagent Prime) for the ISE Ref. tubing.

■

► To prime the ISE Ref. tubing

1 Choose **Utility** > **Maintenance**.

2 Select **Maintenance** (1) from the **Maintenance Type** list on the left.

3 Select **(8) Reagent Prime** from the **Maintenance** Items list on the right.

4 Choose **Select** to open the **Reagent Prime** window.

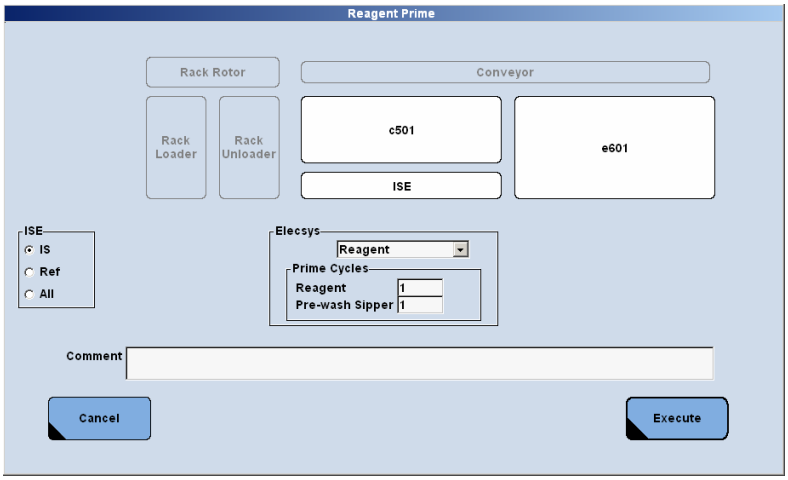

Figure C-33 Reagent Prime window

5 Select a module. Selected modules are highlighted.

6 Choose **Ref** in the **ISE** area and choose **Execute**.

The prime is complete when the system returns to standby.

■

Replacing reaction cells

Replace the reaction cells once a month because they gradually deteriorate over long use. We recommend cleaning the incubator bath and incubator bath filter at the same time.

Replacing reaction cells can be performed with the analyzer being in one of the following states:

- Shutdown status or standby (all mechanical parts can be moved by hand)
- If this maintenance is performed in combination with cleaning the incubator bath, reaction cells are replaced in incubator bath cleaning mode.

  Cleaning the incubator bath on page C-92

The decision which status or mode to choose depends on the analyzer's current status and on other maintenance actions that are to be performed.

Materials required ☐ Reaction cells

Operator time approximately 10 minutes

System time approximately 55 minutes ((7) Wash Reaction Parts, (4) Cell Blank Measurement)

► To replace reaction cells

1. Put the analyzer in shutdown status or the module in standby.
2. Unlock and open the top cover of the module.

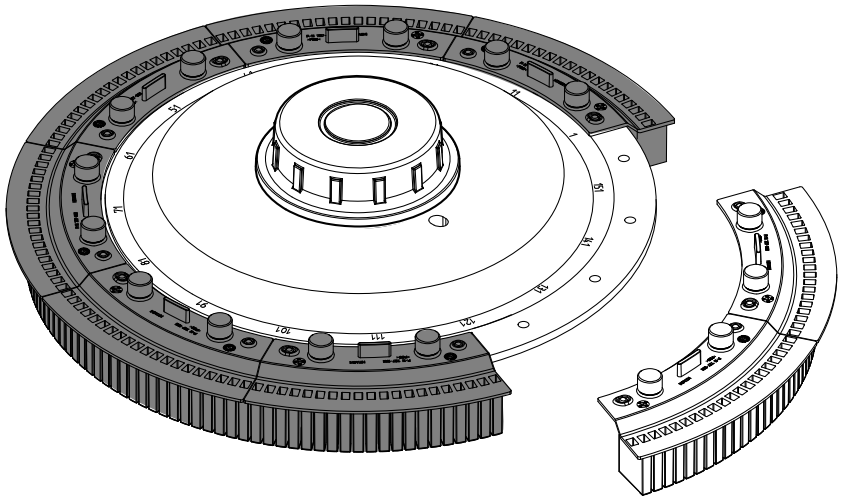

Figure C-34 Removing reaction cells

3. On each section of reaction cells, loosen and remove the thumbscrews and lift the reaction cells out of the reaction disk.
4. Dispose of the used reaction cells according to local regulations.
5. Remount new sections of reaction cells aligning them with the guide pins. Be careful not to touch the optical surfaces.
6. Switch on the analyzer, if the analyzer is in shutdown status.

   After replacing reaction cells, perform the maintenance item (7) Wash Reaction Parts and then perform maintenance item (4) Cell Blank Measurement to verify the integrity of the reaction cells.

■

For detailed instructions, see:
To rinse the reaction system on page C-82
To perform a cell blank measurement on page C-82

Cleaning the incubator bath

Contamination inside the incubator bath or on the photometric window will reduce the reproducibility of measurement results. Clean the incubator bath and photometric window at least once a month.

We recommend combining this maintenance with the weekly cleaning of the IS bath, the monthly replacement of reaction cells and with the quarterly cleaning of the ultrasonic mixers.

For more information, see:
Removing and manually cleaning the IS bath on page C-87
Replacing reaction cells on page C-90
Cleaning the ultrasonic mixers on page C-102

Cleaning of the incubator bath can be performed either with the analyzer in shutdown status or with the module in incubator bath cleaning mode. These two states require different steps to be performed for this maintenance; these steps are described in two separate procedures in the remainder of this section.

For more information, see:
To clean the incubator bath (in incubator bath cleaning mode) on page C-92
To clean the incubator bath (in shutdown status) on page C-95.

Operator time approximately 15 minutes

System time approximately 25 minutes

Materials required
- ☐ Deionized water
- ☐ Cotton swabs
- ☐ Lint-free gauze pads

► To clean the incubator bath (in incubator bath cleaning mode)

1 Put the analyzer in incubator bath cleaning mode:

- Choose **Utility** > **Maintenance**.
- Select **Maintenance** (1) from the **Maintenance Type** list on the left.
- Select **(10) Incubator Bath Cleaning** from the **Maintenance** items list on the right.
- Choose **Select** to open the **Incubator Bath Cleaning** window.
- Select the appropriate module. Selected modules are highlighted.
- Choose **Execute**.

  The analyzer enters incubator bath cleaning mode and water is drained from the incubator bath.

- Choose **OK** to confirm the message of the confirmation window.
- Choose **Monitor** to open the **Maintenance Monitor** window.
- Wait until the message **Incubation Bath Cleaning (Wait Restart)** is displayed.

Do not open the top cover of the module until the corresponding message is displayed on the Maintenance Monitor.

If the top cover is opened before the message is displayed, an alarm is issued and maintenance is stopped.

2 Unlock and open the top cover of the module.

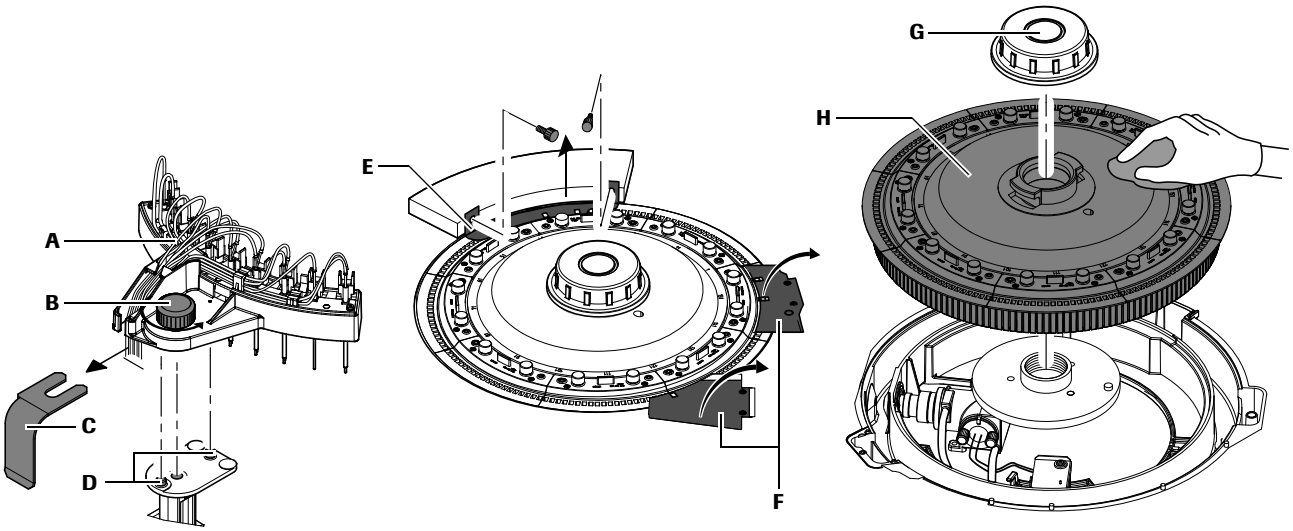

A Cell rinse unit
B Retaining screw
C Tube retainer
D Guide pins
E Cell cover of the ultrasonic mixers
F Cell covers
G Retaining nut
H Reaction disk

Figure C-35 Dismount the cell rinse unit and the reaction cells

3 Loosen the retaining screw (**B**) of the cell rinse unit and lift off the entire unit (**A**).

4 Remove the cell cover above the ultrasonic mixers (**E**). Lift the cell covers (**F**) and leave them vertical.

5 Loosen the retaining nut (**G**) and remove the reaction disk (**H**) inclusive reaction cells from system. Be careful not to touch the optical surfaces.

Damage to the photometer windows

Do not scratch the photometer windows when cleaning. Use only gauze pads moistened with deionized water.

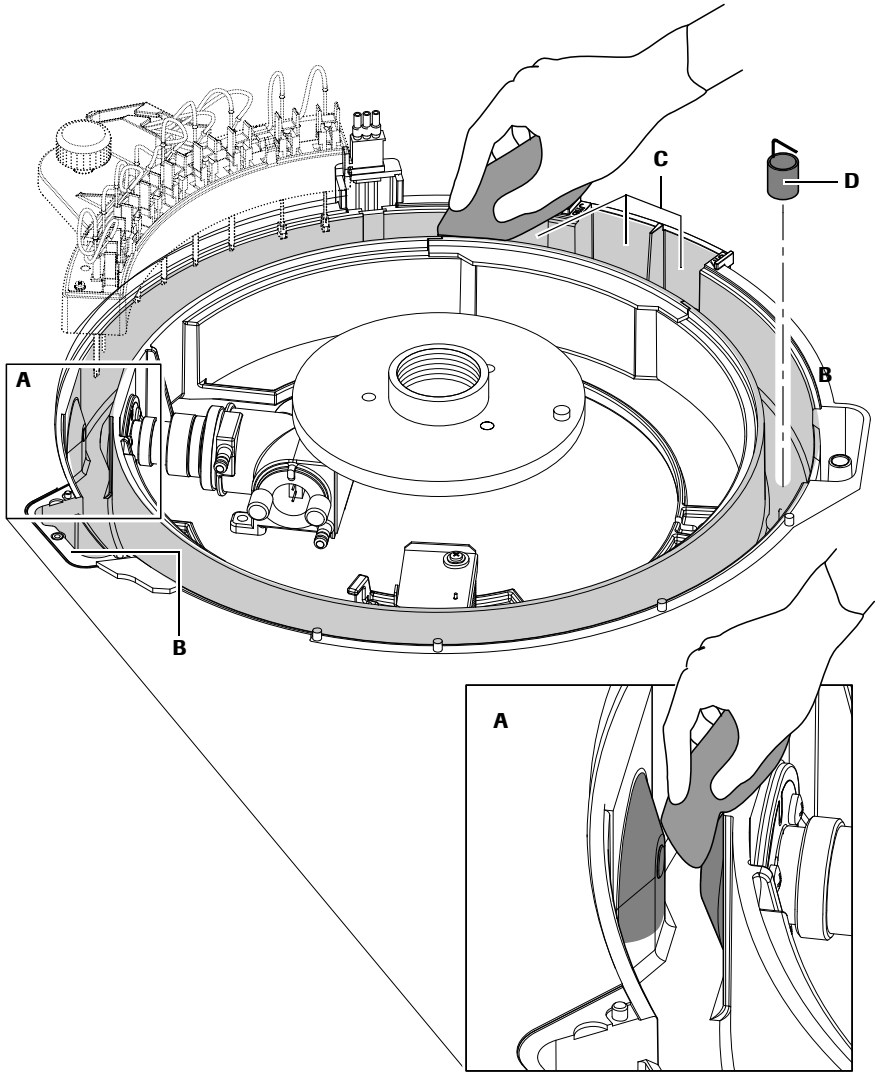

A Photometer windows
B IS bath location
C Ultrasonic mixer positions
D Drain filter

Figure C-36 Wipe the inside surfaces of the incubator bath

6 Carefully wipe the photometer windows (**A**) using a clean lint-free gauze pad moistened with deionized water.

7 If you combine this maintenance action with the weekly maintenance action *To remove and manually clean the IS bath*, remove and manually clean the IS bath.

For instructions, see *To remove and manually clean the IS bath* on page C-87.

8 Wipe the inside surfaces of the incubator bath, using a clean lint-free gauze pad. Wipe the indented part near the ultrasonic mixers (**C**) with a cotton swab.

For instructions, see *To clean the surface of the ultrasonic mixer* on page C-102.

9 Remove the incubator bath drain filter (**D**). Grasp the filter by the handle and pull up to remove.

10 Clean and rinse the filter with deionized water and return it in place.

11 If you combine this maintenance action with the maintenance action *Replacing reaction cells*, replace all sections of reaction cells against new reaction cells.

See *To replace reaction cells* on page C-91.

12 Reinstall the reaction disk (inclusive reaction cells), the cell cover of the ultrasonic mixer and the cell rinse unit.

13 Turn down the cell covers for the reagent probes.

14 Close the top cover of the module and lock it.

15 Choose Continue on the **Utility** > **Maintenance** >**Incubator Bath Cleaning** window to end the incubator bath cleaning mode.

The incubator bath is filled with water and the analyzer returns to standby.

16 Perform maintenance item (4) Cell Blank Measurement.

Perform a cell blank measurement before you resume routine operation. This is necessary to compensate for a potential change in light intensity after the cleaning of the photometric windows and replacing the reaction cells.

For instructions, see *To perform a cell blank measurement* on page C-82.

■

► To clean the incubator bath (in shutdown status)

1 Put the analyzer in shutdown status.

2 Unlock and open the top cover of the module.

3 Loosen the retaining screw of the cell rinse unit and lift off the entire unit.

4 Remove the cell cover above the ultrasonic mixers. Lift the other cell covers and leave them vertical.

Do not let all the water drain. Leave a small amount of water to just cover the bottom of the incubator bath. Close the drain by moving the tap to the Operation position.

5 Turn the tap located on the rear of the analyzer to the DRAIN position and drain the incubator bath. After draining, turn the tap back to its OPERATION position.

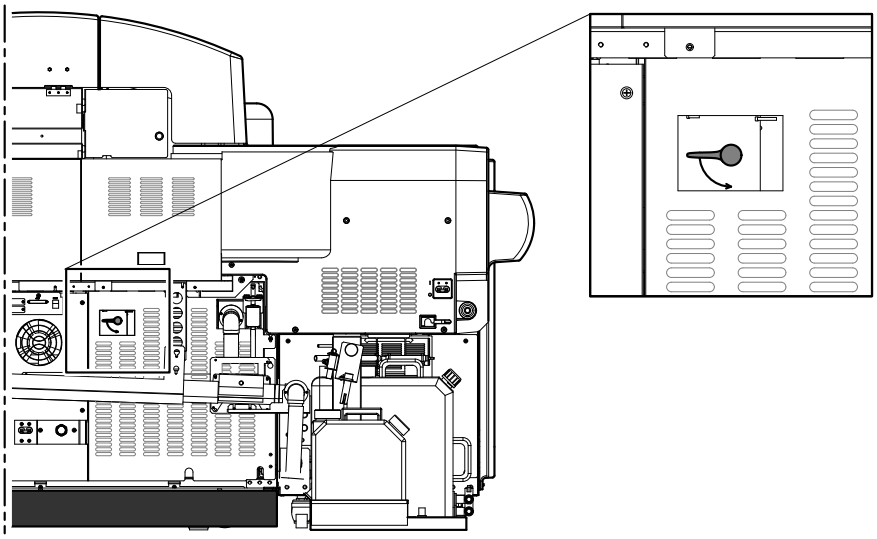

Figure C-37 Tap for manually draining the incubator bath

6 Loosen the retaining nut and remove the reaction disk inclusive reaction cells from system. Be careful not to touch the optical surfaces.

Damage to the photometer windows

Do not scratch the photometer windows when cleaning. Use only gauze pads moistened with deionized water.

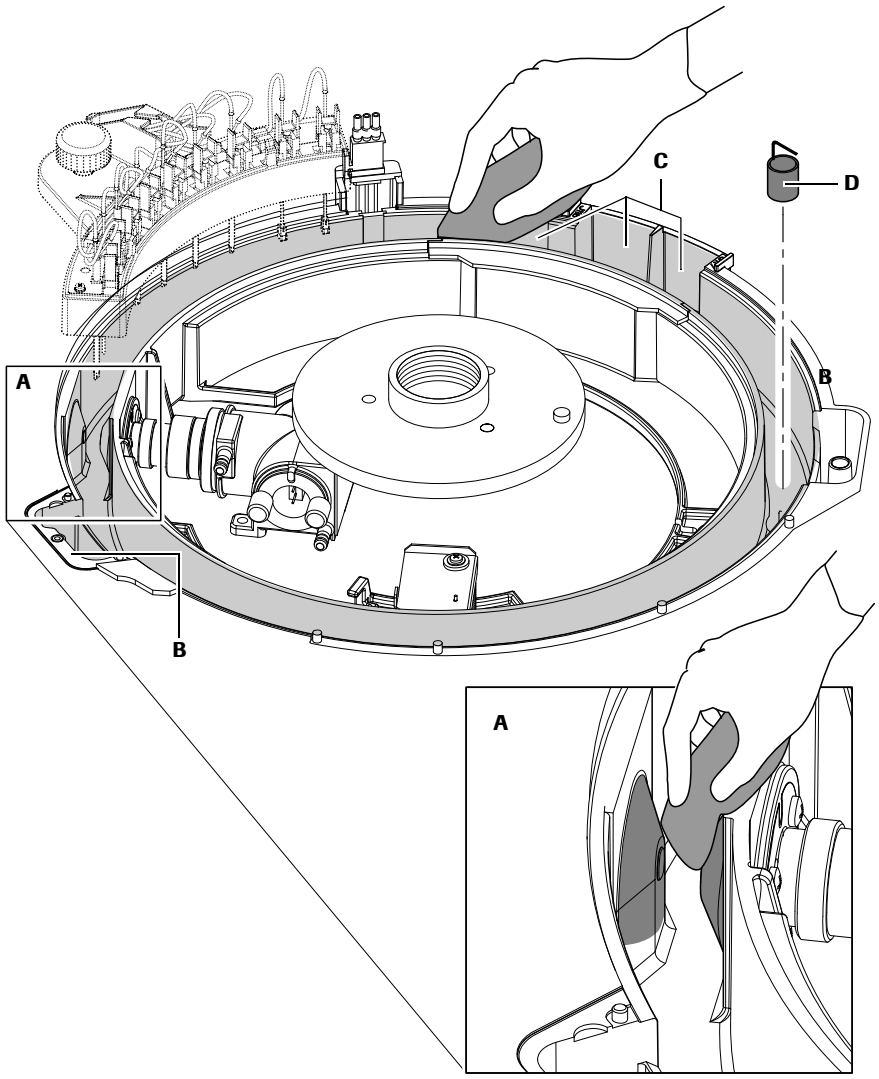

A Photometer windows
B IS bath location
C Ultrasonic mixer positions
D Drain filter

Figure C-38 Wipe the inside surfaces of the incubator bath

7 Carefully wipe the photometer windows (**A**) using a clean lint-free gauze pad moistened with deionized water.

8 If you combine this maintenance action with the weekly maintenance action *To remove and manually clean the IS bath*, remove and manually clean the IS bath.

For instructions, see *To remove and manually clean the IS bath* on page C-87.

9 Wipe the inside surfaces of the incubator bath, using a clean lint-free gauze pad. Wipe the indented part near the ultrasonic mixers (**C**) with a cotton swab.

For instructions, see *To clean the surface of the ultrasonic mixer* on page C-102.

10 Remove the incubator bath drain filter (**D**). Grasp the filter by the handle and pull up to remove.

11 Clean and rinse the filter with deionized water and return it in place.

12 If you combine this maintenance action with the maintenance action *Replacing reaction cells*, replace all sections of reaction cells against new reaction cells.

See *To replace reaction cells* on page C-91.

13 Reinstall the reaction disk (inclusive reaction cells) and the cell rinse unit.

14 Reinstall the cell cover of the ultrasonic mixer and **remove one** section of reaction cells.

15 Turn down the cell covers for the reagent probes.

16 Gradually pour about 500 mL of deionized water into the incubator bath and mount the missing section of reaction cells. Be careful not to allow water to overflow from the incubator bath.

17 Close the top cover of the module and lock it.

18 Start up the analyzer.

19 Perform maintenance items (5) Incubation Water Exchange and (4) Cell Blank Measurement.

Make sure to perform a cell blank measurement before you resume routine operation. This is necessary to compensate for a potential change in light intensity after the cleaning of the photometric windows.

For instructions, see *To perform a cell blank measurement* on page C-82.

■

Cleaning the detergent aspiration filters

Inspect the detergent aspiration filters, which are attached to the tube end in the cell detergent bottles. The cell detergent bottles (Cell Wash Solution I / NaOH-D and Cell wash Solution II / Acid Wash) are located behind the left front door of the **c** 501 module. Clean the filter each time you replace a bottle but at least once a month. Blockages of the filter will reduce the accuracy of detergent aspiration and will lead to insufficient cell cleaning.

This maintenance comprises the following procedures and maintenance items:

1. To clean the detergent aspiration filters
2. To perform a cell detergent prime

Operator time approximately 5 minutes

System time approximately 7 minutes

Materials required
- ☐ Deionized water
- ☐ Paper towel

► To clean the detergent aspiration filters

1 Put the analyzer in shutdown status or the module in standby.

2 Open the front doors of the module and take out the detergent bottle(s).

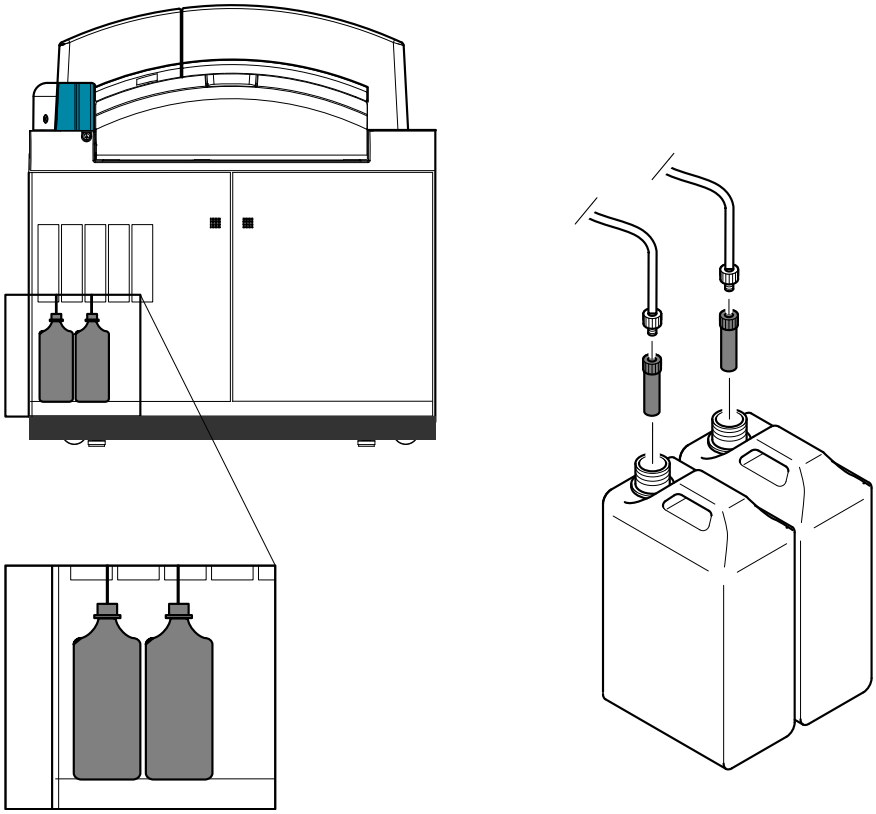

Figure C-39 Cleaning the detergent aspiration filters

3 Remove the tubing from the detergent bottle(s) and unscrew the filter from the tube end.

4 Clean and rinse the filter with deionized water.

CAUTION! Incorrect results due to incorrect insertion of aspiration tube. Insert the aspiration tube so that the end of the tube touches the bottom of the bottle. Do not bend the aspiration tube.

5 Screw the filter on the tube end and place it back into the bottle.

6 Close the front doors.

7 Switch on the analyzer, if the analyzer is in shutdown status.

8 Perform maintenance item **(9) Cell Detergent Prime**.

■

► To perform a cell detergent prime

1 Choose **Utility** > **Maintenance**.

2 Choose **(9) Cell Detergent Prime** on the **Maintenance** Items list on the right.

3 Choose **Select** to open the **Cell Detergent Prime** window.

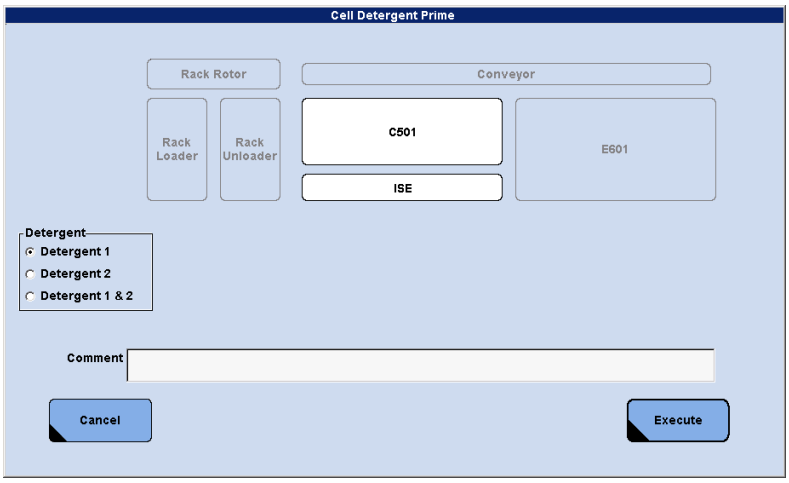

Figure C-40 Cell Detergent Prime window

4 Select a module. Selected modules are highlighted.

5 Select an option in the **Detergent** area to specify which line is to be primed.

Detergent 1 corresponds to Cell Wash Solution I / NaOH-D (basic). **Detergent 2** corresponds to Cell wash Solution II / Acid Wash (acid).

6 Choose **Execute**.

■

Cleaning the filters behind the front doors

Clean the radiator filter, the power supply filter and the filter of the circuit board rack at least once a month to prevent dust or dirt accumulation. Blockages of the filter may cause temperature rise and faulty temperature control of the analyzer.

Operator time approximately 10 minutes

Materials required

- ☐ Paper towels
- ☐ Water for rinsing
- ☐ Vacuum cleaner

⚠ CAUTION

Burns due to contact with the radiator of the refrigerator

You may get burned by touching the radiator.

- Avoid touching the radiator when removing the filter.

► To clean the filters behind the front doors

1 Put the analyzer in shutdown status or the module in standby.

2 Open the front doors.

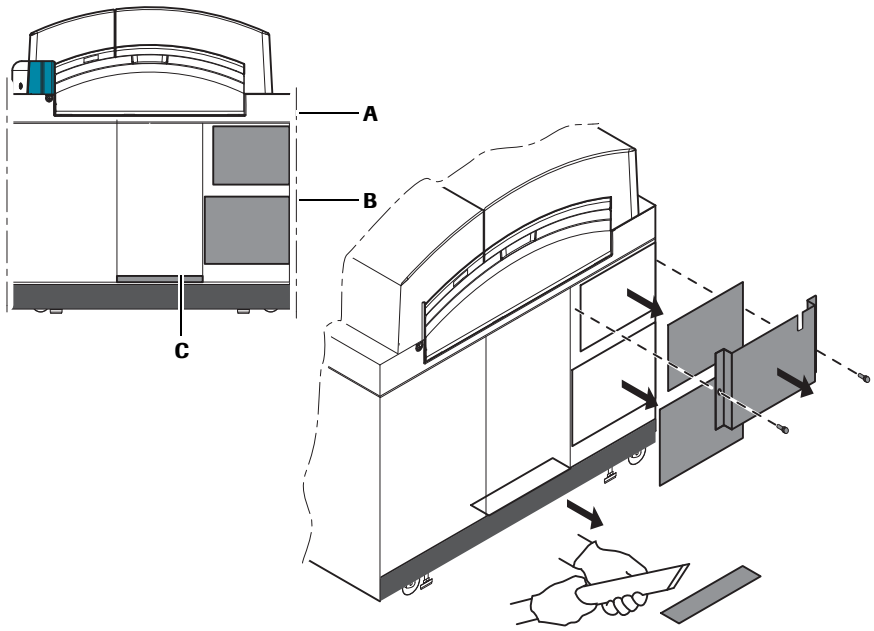

A Power supply filter
B Radiator filter
C Filter of the circuit board rack

Figure C-41 Cleaning power supply filter, the radiator filter and the filter of the circuit board rack

3 Remove the filters:

- Loosen the thumbscrews of the cover plate of the power supply filter (**A**) and remove the plate.
- Remove the power supply filter (**A**) and the radiator filter (**B**) by pulling it forward from the retaining brackets.
- Remove the filter of the circuit board rack (**C**) by pulling it out from underneath the circuit board rack.

4 Vacuum the filters. If it is conspicuously contaminated, rinse the filters with water and blot dry with paper towels.

5 Reinstall the filters:

- To reinstall the radiator filter (**B**), first insert the bottom of the filter. Then, push the top of the filter into the brackets.
- Return the power supply filter (**A**) and the filter of the circuit board rack (**C**) to their original positions.
- Return the cover plate of the power supply filter and tighten the thumbscrews.

6 Close the front doors of the module.

7 Switch on the analyzer, if the analyzer is in shutdown status.

■

Every three months maintenance

In this section, you find all the maintenance for the **c** 501 module that must be performed at least once every three months.

This section discusses the following maintenance actions:
Cleaning the ultrasonic mixers on page C-102

Cleaning the ultrasonic mixers

Clean the ultrasonic mixers every 3 months or after 225.000 tests (whatever comes first). Contamination and precipitation on the surface of the ultrasonic mixers may cause inadequate mixing and thus lead to inaccurate results.

If the ultrasonic mixer cleaning coincides with the monthly incubator bath cleaning, the procedure can be performed together.

Replacement of ultrasonic mixer

The ultrasonic output intensity is continually monitored during measurement. If the data alarm <Mix occurs frequently, replacement of the ultrasonic mixer is required. Contact your Roche service representative for the replacement.

This maintenance comprises the following procedures and maintenance items:

1. To clean the surface of the ultrasonic mixer
2. To check the intensity of the ultrasonic output

Operator time approximately 6 minutes

System time approximately 7 minutes

Materials required
- ☐ 2% EcoTergent solution
- ☐ Deionized water
- ☐ Cotton swabs

► To clean the surface of the ultrasonic mixer

1 Put the analyzer in incubator bath cleaning mode:

- Choose **Utility** > **Maintenance**.
- Select **Maintenance** (1) from the **Maintenance Type** list on the left.
- Select **(10) Incubator Bath Cleaning** from the **Maintenance** Items list on the right.
- Choose **Select** to open the **Incubator Bath Cleaning** window.
- Select the appropriate module. Selected modules are highlighted.
- Choose **Execute**.

  The analyzer turns to incubator bath cleaning mode and water is drained from the incubator bath.

- Choose **OK** to confirm the message of the confirmation window.
- Choose **Monitor** to open the **Maintenance Monitor** window.
- Wait until a message about the Incubator bath cleaning mode is displayed.

Do not open the top cover of the module until the corresponding message is displayed on the Maintenance Monitor.

If the top cover is opened before the message is displayed, an alarm is issued and maintenance is stopped.

2 Unlock and open the top cover of the module.

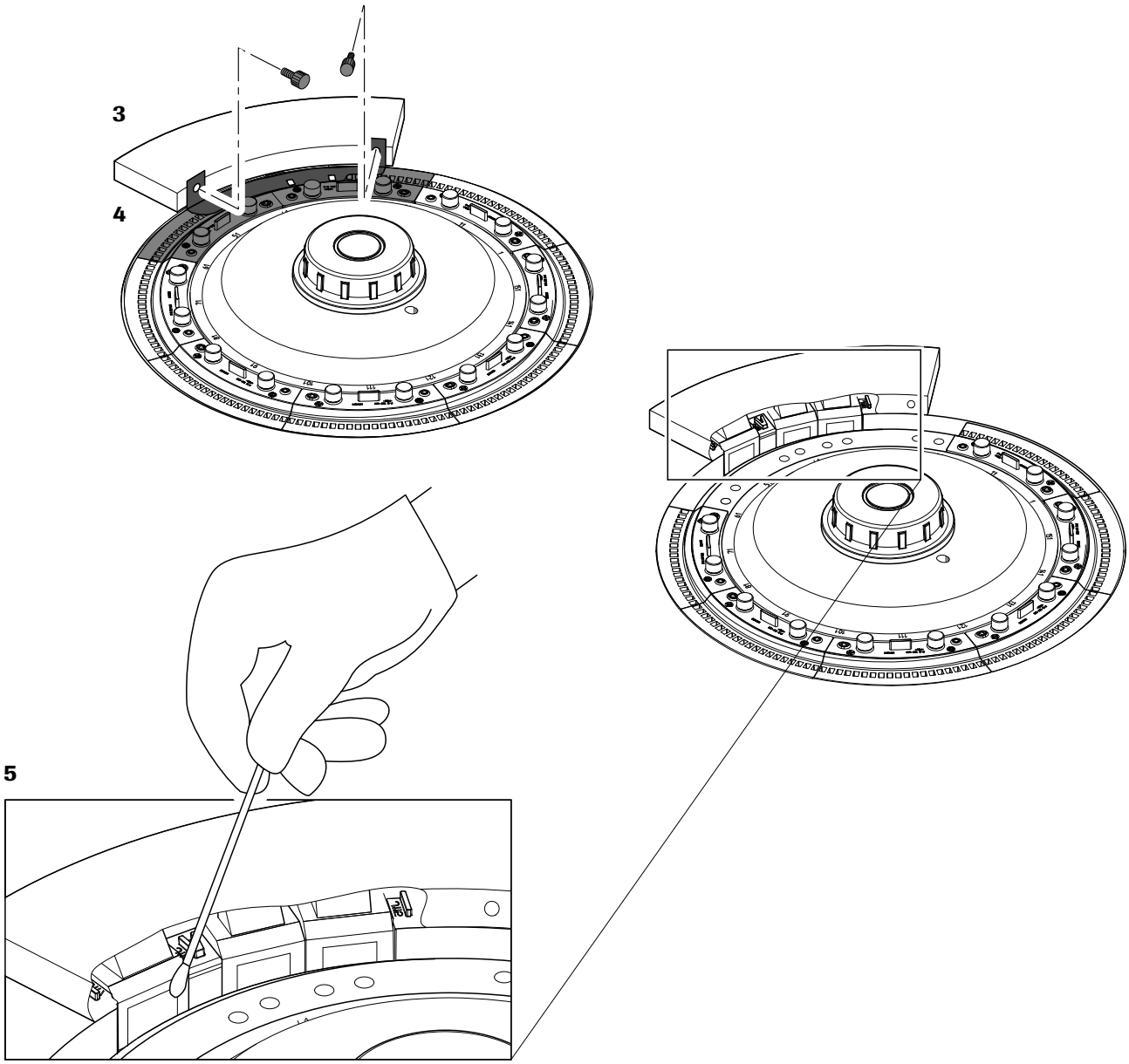

Figure C-42 Cleaning surface of ultrasonic mixer with cotton swabs

3 Remove the cell cover.

4 Loosen and remove the thumbscrews on two or three sections of reaction cells near the ultrasonic mixers. Lift the reaction cells out of the reaction disk. Be careful not to touch the optical surfaces.

5 Gently wipe the surface of the ultrasonic mixers with cotton swabs moistened with 2% EcoTergent solution. Then, wipe off the detergent with cotton swabs moistened with deionized water.

6 Return the removed sections of reaction cells.

7 Return the cell cover.

8 Close the top cover of the module and lock it.

9 Choose **Start** (global button) > **Start** to release the incubator bath cleaning mode.

Water is poured into the incubator bath.

■

► To check the intensity of the ultrasonic output

1 Choose **Utility** > **Maintenance**.

2 Select **Check (2)** from the **Maintenance Type** list on the left.

3 Select **(7) Cuvette Mixing** from the **Maintenance** Items list on the right.

4 Choose **Select**, to open the **Cuvette Mixing** window.

5 Select a module (selected modules are highlighted), and verify the **Cell Wash** check box is not selected.

Selecting the **Cell Wash** check box would rinse all reaction cells prior to the actual intensity check.

6 Choose **Execute**.

■

Every six months maintenance

In this section, you find all the maintenance for the **c** 501 module that must be performed at least once every six months.

This section discusses the following maintenance actions:
Replacing the photometer lamp on page C-105

Replacing the photometer lamp

The reproducibility of measurement will decrease if the photometer lamp deteriorates. Replace the photometer lamp if the lamp has been used for more than six months, for more than 750 hours of continuous powered-on time or if the photometer check value exceeds 14000, whatever comes first.

We recommend combining this maintenance with the monthly cleaning of incubator bath.

This maintenance comprises the following procedures and maintenance items:

1. To check the light intensity
2. To remove the photometer lamp
3. To install a new photometer lamp

Operator time approximately 5 minutes

System time approximately 20 minutes

Materials required
- ☐ Alcohol (e.g. isopropyl alcohol or ethanol)
- ☐ Lint-free gauze pads
- ☐ Photometer lamp

► To check the light intensity

1 Choose **Utility** > **Maintenance**.

2 Select **Maintenance** (1) from the **Maintenance Type** list on the left.

3 Select **(3) Photometer Check** from the **Maintenance** Items list on the right.

4 Choose **Select** to open the **Photometer Check** window.

5 Select a module. Selected modules are highlighted.

6 Select **Execute**.

Water is injected from the rinsing mechanism into reaction cell no. 1 and the absorbance of the water is measured for each available wavelength.

7 After the photometer check select **Print** (global button) to open the **Print** window.

8 Select **Print** to print a **Photometer Check** report and check the absorbance values of the current photometer check.

■

```
                                    Photometer Check                                  8:20
---------------PREVIOUS DATA---------------          ---------------CURRENT DATA---------------
 c501    DATE     05/12/1     8:20                            DATE     05/12/2     8:18
          340 nm      10386                                    340 nm      10386
          376 nm      10358                                    376 nm      10358
          415 nm      9534                                     415 nm      9534
          450 nm      9275                                     450 nm      9275
          480 nm      9195                                     480 nm      9195
          505 nm      9130                                     505 nm      9130
          546 nm      8984                                     546 nm      8984
          570 nm      8967                                     570 nm      8967
          600 nm      8929                                     600 nm      8929
          660 nm      8676                                     660 nm      8676
          700 nm      8657                                     700 nm      8657
          800 nm      8594                                     800 nm      8594
```

Figure C-43 Photometer check report

If the current data exceed 14000, check the following points and then replace the photometer lamp:

- Verify there are no contamination or bubbles in incubator bath or photometric windows.
- Verify reaction cell no. 1 is not scratched, cracked or damaged.

If the current data value is quite different from the previous one, check for the cause!

► To remove the photometer lamp

1 Put the analyzer in shutdown status.

See *To shutdown the analyzer* on page C-6.

Alternatively, cut off the photometer lamp's power supply by executing the maintenance item (39) Change Light Source Lamp from the **Maintenance** Items list on **Utility** > **Maintenance**.

Alternatively, you can combine the incubator bath cleaning with the changing of the photometer lamp.

CAUTION! You may be burned if you touch any part of the photometer lamp unit. Wait about 30 minutes for the lamp and lamp housing to cool down.

2 Unlock and open the top cover of the module.

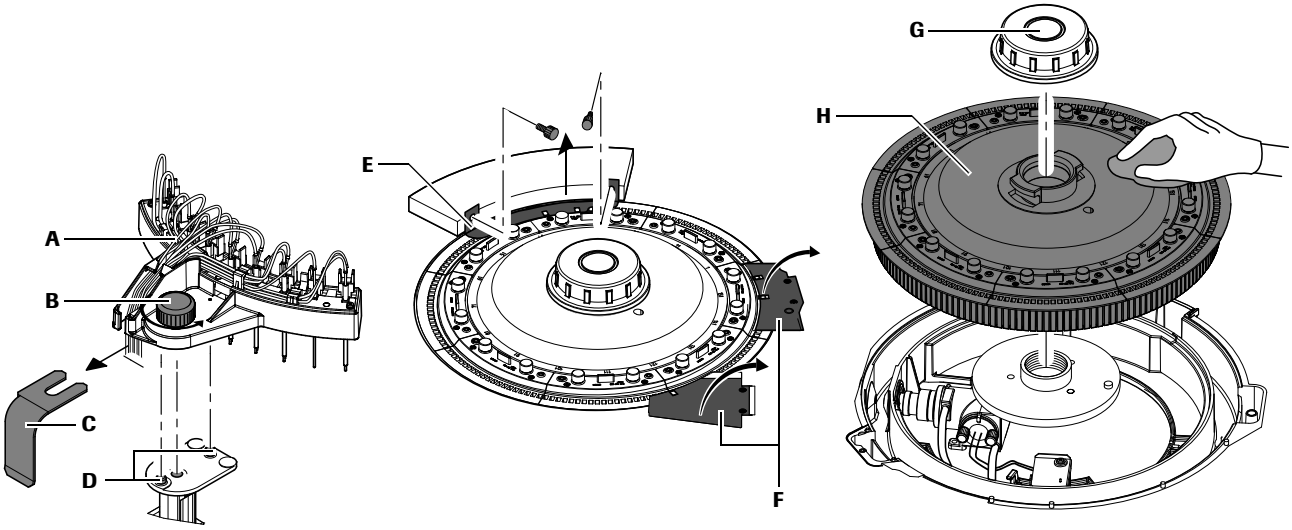

A Cell rinse unit
B Retaining screw
C Tube retainer
D Guide pins
E Cell cover of the ultrasonic mixers
F Cell covers
G Retaining nut
H Reaction disk

Figure C-44 Dismount the cell rinse unit and the reaction cells

3 Loosen the retaining screw (**B**) of the cell rinse unit and lift off the entire unit (**A**).

4 Remove the cell cover above the ultrasonic mixers (**E**). Lift the cell covers (**F**) and leave them vertical.

5 Loosen the retaining nut (**G**) and remove the reaction disk (**H**) inclusive reaction cells from system. Be careful not to touch the optical surfaces.

If the reaction disk is detached with the reaction cells left in place, water drops adhering to the outside of the reaction cells may drip onto the detector, causing an alarm to be issued.

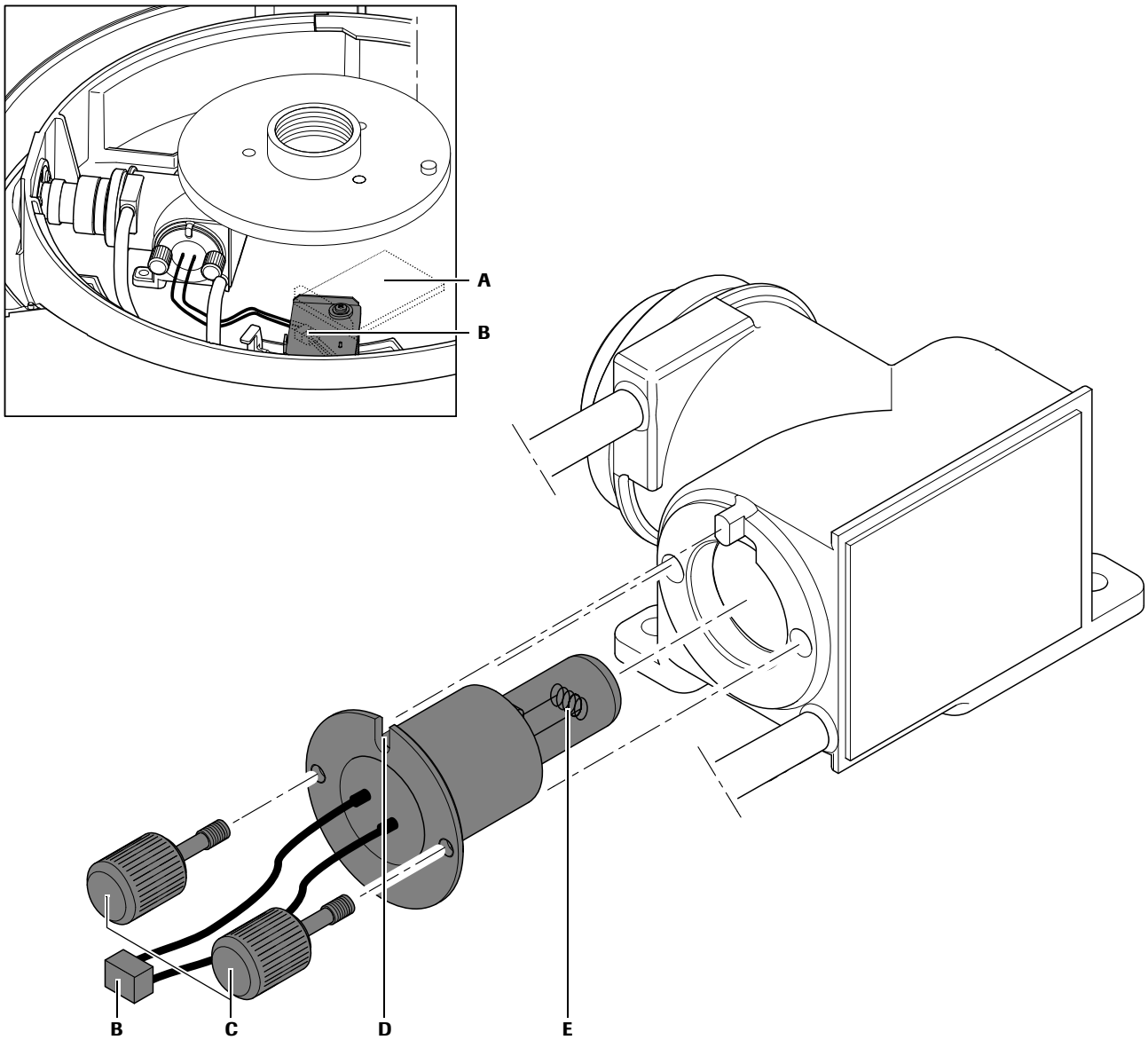

A Cover of the connector
B Connector
C Retaining screws
D Pin hole of the lamp base
E Photometer lamp

Figure C-45 Replacing photometer lamp

CAUTION! You may be burned if you touch any part of the photometer lamp unit. Check that the photometer lamp unit has cooled down before replacing the lamp.

6 Rotate the connector cover (**A**) and disconnect the connector (**B**) of the lamp wire.

7 Loosen two lamp retaining screws (**C**) and pull out the photometer lamp (**E**).

When the screws become easy to turn, the lamp can be detached.

8 Carefully remove the retaining screws from the lamp base. These are needed to install the new lamp.

9 Dispose of the photometer lamp according to local regulations.

■

► To install a new photometer lamp

1. Insert the retaining screws in the new lamp.
2. Insert the new photometer lamp:
   - Align the pin hole (**D**) in the lamp base with the guide pin of the lamp housing
   - Tighten the two lamp retaining screws (**C**).

   If you have touched the glass part of the new photometer lamp, wipe it off with a gauze pad moistened with alcohol.
3. Connect the connectors of the lamp wires.

   Do not let the lamp wires float up from the unit.
4. Reinstall the reaction disk with the reaction cells and close the cell covers.
5. Mount the cell rinse unit to its original position.
6. Close the top cover of the module and lock it.
7. Start up the analyzer again or—if maintenance item (39) Change Light Source Lamp has been executed without shutting down the analyzer—choose **Cancel Maintenance** on the **System Overview** screen.
8. Wait about 30 minutes for the photometer lamp to stabilize.

   Finally, perform a cell blank measurement before you resume routine operation. This is necessary to compensate for a potential change in light intensity.

   For instructions, see *To perform a cell blank measurement* on page C-82.

■

As needed maintenance

In this section, you find all the maintenance for **c** 501 module that must be performed as needed and are not subject to a regular time schedule.

This section discusses the following maintenance actions:
Replacing nozzle tips on cell rinse nozzles on page C-110
Draining the vacuum tank on page C-113

Cleaning the ISE Ref. (KCl) aspiration filter

Inspect the ISE Ref. aspiration filter, which is attached to the tube end in the ISE reference solution bottle. Clean the filter each time you replace the bottle but at least once a month. Blockages of the filter will reduce the accuracy of ISE Ref. aspiration and data reliability.

See *Cleaning the ISE Ref. (KCl) aspiration filter* on page C-88.

Cleaning the detergent aspiration filters

Inspect the detergent aspiration filters, which are attached to the tube end in the cell detergent bottles. The cell detergent bottles (Cell Wash Solution I / NaOH-D and Cell wash Solution II / Acid Wash) are located behind the left front door of the c 501 module. Clean the filter each time you replace a bottle but at least once a month. Blockages of the filter will reduce the accuracy of detergent aspiration and will lead to insufficient cell cleaning.

See *Cleaning the detergent aspiration filters* on page C-110.

Replacing nozzle tips on cell rinse nozzles

Replace the nozzle tips on the cell rinse nozzles if they are worn but latest after 225.000 tests. The replacement cycle is typically one to two years depending on conditions of use.

Replace a nozzle tip if its corner or bottom is worn so that water remains in the reaction cell.

Operator time approximately 6 minutes

Materials required
- ☐ Needle-nose pliers
- ☐ Nozzle tip

► To replace the cell rinse nozzle tips

1 Put the analyzer in shutdown status or the module in standby.

2 Unlock and open the top cover of the module.

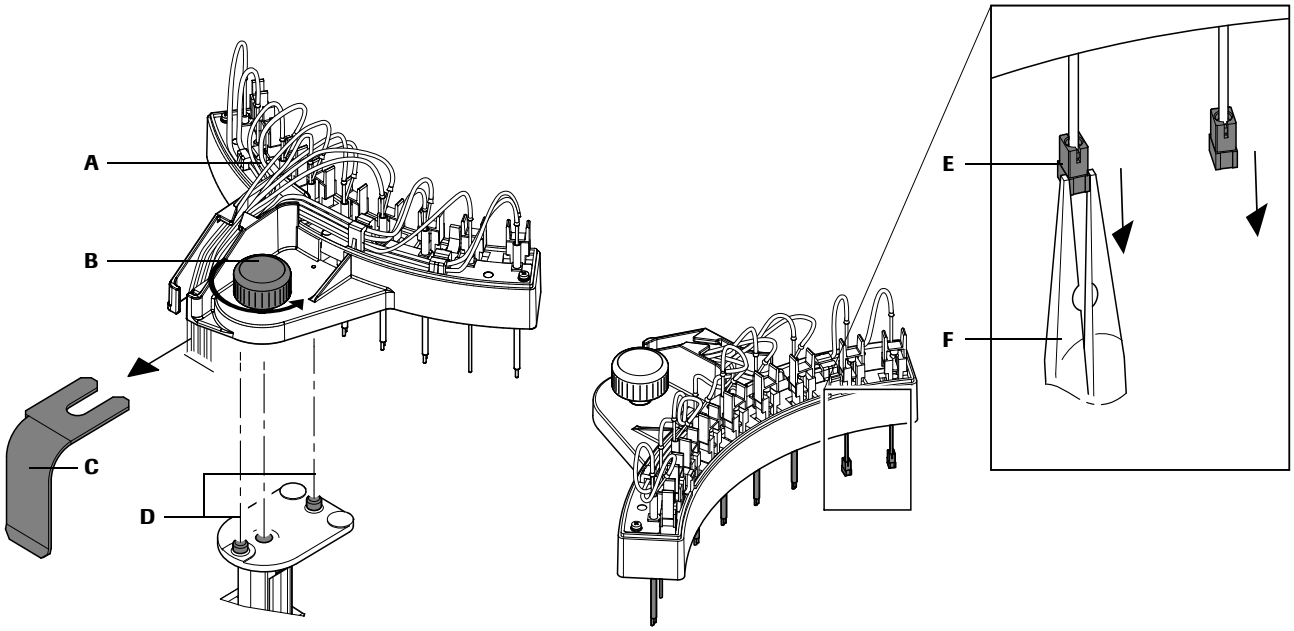

A Cell rinse unit
B Retaining screw
C Tube retainer
D Guide pins
E Nozzle tip
F Needle-nose pliers

Figure C-46 Dismount the cell rinse unit and replace the nozzle tips

3 Loosen the retaining screw (**B**) of the cell rinse unit and lift off the entire unit (**A**).

4 Grasp the sides of the nozzle tip (**E**) with needle-nose pliers (**F**) and pull it out.

Dispose of the nozzle tip according to local regulations.

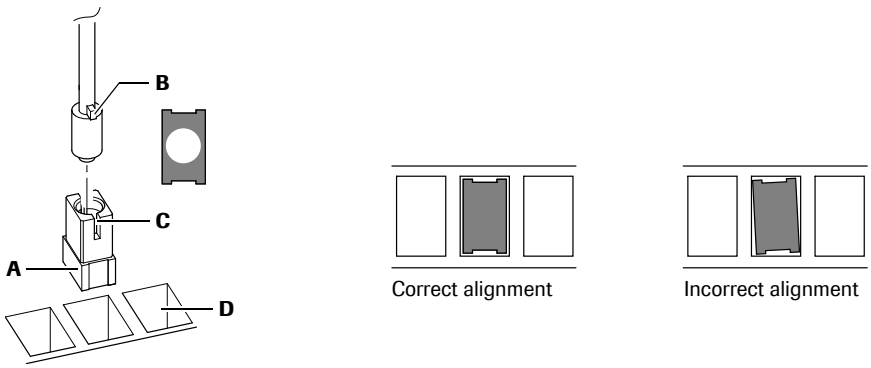

A Nozzle tip
B Guide pin
C Guide groove
D Reaction cell

Figure C-47 Alignment of a nozzle tip in relation to reaction cells

5 Insert a new nozzle tip (**A**) by hand aligning it with the guides (**B**, **C**).

6 Align the pin holes of the cell rinse unit with the guide pins (**D**, Figure C-46) and attach the rinse unit.

7 Fix the tube retainer (**C**, Figure C-46) below the screw and then mount the unit.

8 Make sure the nozzle tip is not at a slant relative to the reaction cell.

9 Close the top cover of the module and lock it.

10 Switch on the analyzer, if the analyzer is in shutdown status.

■

Cleaning the ultrasonic mixers

Clean the ultrasonic mixers every 3 months or after 225.000 tests (whatever comes first). Contamination and precipitation on the surface of the ultrasonic mixers may cause inadequate mixing and thus lead to inaccurate results.

See *Cleaning the ultrasonic mixers* on page C-102.

Replacing the photometer lamp

The reproducibility of measurement will decrease if the photometer lamp deteriorates. Replace the photometer lamp if the lamp has been used for more than six months, for more than 750 hours of continuous powered-on time or if the photometer check value exceeds 14000, whatever comes first.

See *Replacing the photometer lamp* on page C-105.

Draining the vacuum tank

An alarm is issued (Liquid in vacuum tank) when there is water or waste solution in the vacuum tank. If this alarm appears, the vacuum tank must be drained. In case this happens frequently, contact the Roche service representative.

Operator time approximately 5 minutes

Materials required ☐ Beaker

► **To drain the vacuum tank**

1 Shut down the analyzer or power off the **c** 501 module.

2 Open the front doors of the **c** 501 and locate the vacuum tank.

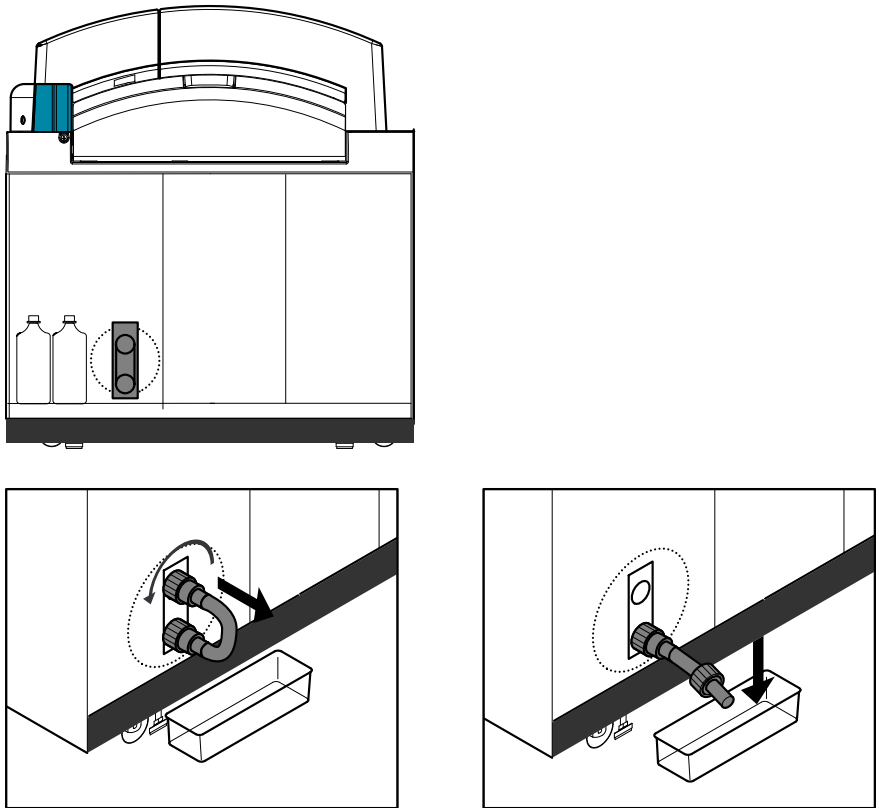

Figure C-48 Draining the vacuum tank

3 Remove the cap holding the drain tube of the vacuum tank.

4 Drain the waste solution into a beaker.

5 Replace the drain tube and reattach the cap to secure the drain tube.

6 Dispose of the contents of the beaker according to local regulations.

7 Close the front doors of the module.

8 Switch on the analyzer, if the analyzer is in shutdown status.

■

Cleaning instrument surfaces

Spills on the instrument surface could be potentially biohazardous and damage the surface.

Operator time approximately 5 minutes

Materials required
- ☐ Cloth or paper towels
- ☐ Laboratory disinfectant (no alcohol or bleach)

► **To clean instrument surfaces**

1. Put the analyzer in shutdown status or the module in standby.
2. Unlock and open the top cover of the module.
3. Clean the module surfaces using a cloth or paper towel moistened with disinfectant.

   Clean up all spills immediately. Use this procedure to ensure that surfaces are clean. If necessary, move the probes or units manually to clean the surface.
4. Close the top cover and lock it with the key.

■

Extended Power OFF procedures

If the system is not used for an extended period of time, it is important to ensure that the system is properly prepared and that the correct shut down maintenance has been performed.

Time period (Days)	Power OFF procedure	Power ON procedure
1 to 2	Power OFF 1	Power ON 1
3 to 7	Power OFF 2	Power ON 2
8 or more	When the instrument was not in use for a period longer than 8 days, call Roche service representative. The necessary procedure is performed by your Roche service representative.	

Table C-27 Extended power OFF procedures

Power OFF 1

Use this procedure if the instrument will not be in use for 1 to 2 days (e.g., a weekend).

► **Power OFF 1**

1. Choose **Shut Down** (global button) to display the **Shut Down** window.
2. Select the **Shut Down** option and choose **Execute** to confirm the shutdown.
3. Wait until the computer power supply turns off. Then, switch off the power switch of the printer and monitor.

   CAUTION! Damage to the control unit or data loss. Before switching-off of the analyzer, make sure the monitor indication has changed from shutdown to a state where nothing is displayed.
4. Switch off the operation power switch on the left side face of the rack sampler unit.
5. Turn off the water supply.
6. Remove and cap the ISE IS and ISE Dil. bottles.

   Store the ISE IS and ISE Dil. bottles at room temperature.
7. Close the top cover.

■

Power OFF 2

Use the following procedure if the instrument will not be used for 3 to 7 days.

► Power OFF 2

1. Choose **Shut Down** (global button) to display the **Shut Down** window.
2. Select the **Shut Down** option and choose **Execute** to confirm the shutdown.
3. Wait until the computer power supply turns off. Then, switch off the power switch of the printer and monitor.

   CAUTION! Damage to the control unit or data loss. Before switching-off of the analyzer, make sure the monitor indication has changed from shutdown to a state where nothing is displayed.
4. Switch off the operation power switch on the left side face of the rack sampler unit.
5. Turn off the water supply.
6. Remove and cap the ISE IS and ISE Dil. bottles.

   Store the ISE IS and ISE Dil. bottles at room temperature.
7. Remove the reaction cells.

   Store the reaction cells in deionized water. All reaction cells must be filled with deionized water.
8. Close the top cover.

■

Power ON procedures (after Extended Power OFF)

Power ON 1

The procedure below correspons to *Power OFF 1*, an extended Power OFF procedure applied if the instrument will not be in use for 1 to 2 days (for example, a weekend).

► To start the system

1. Switch on the water supply of the system.
2. Place ISE IS and ISE Dil. bottles into the reagent position and uncap them.
3. Switch on the operation power switch, located on the left side of the rack sampler unit.

   The analyzer starts the initialization routine (time for **c** 501, **e** 601, and control unit approximately 12 min).
4. Switch on each power switch of the computer, printer, and monitor. While the analyzer is performing initialization the **Logon** screen is displayed.
5. Enter your Operator ID and password to log on.
6. Choose **OK** to gain access to the software. When initialization is completed, the analyzer goes into standby.
7. Perform the *Power ON* maintenance pipe.

   See:
   Performing maintenance items or pipes on page C-13
   Power ON on page C-32

■

Power ON 2 The procedure below correspons to *Power OFF 2*, an extended Power OFF procedure applied if the instrument will not be used for 3 to 7 days.

► To start the system

1. Switch on the water supply of the system.
2. Check the water level of the incubator bath.

   If necessary, refill with deionized water.
3. Place reaction cells on the reaction disk.
4. Place ISE IS and ISE Dil. bottles into the reagent position and uncap them.
5. Switch on the operation power switch, located on the left side of the rack sampler unit.

   The analyzer starts the initialization routine (time for **c** 501, **e** 601, and control unit approximately 12 min).
6. Switch on each power switch of the computer, printer, and monitor. While the analyzer is performing initialization the **Logon** screen is displayed.
7. Enter your Operator ID and password to log on.
8. Choose **OK** to gain access to the software and begin operation. When initialization is completed, the analyzer goes into standby.
9. Perform the *Power ON* and the *Weekly* maintenance pipe.

   See:
   Performing maintenance items or pipes on page C-13
   Power ON on page C-32
   Weekly shutdown on page C-33

■

Maintenance e 601

This chapter describes the maintenance actions required for correct and efficient running of the **e** 601 module. The required schedule of the maintenance actions, for example, daily, weekly, and quarterly is provided as well as actions that are performed as needed.

In this chapter

Chapter **18**

Maintenance schedule C-121
Daily maintenance C-122
Cleaning probes and sippers C-122
Weekly maintenance C-125
Cleaning ProCell/CleanCell nozzles and replace reservoirs C-125
Cleaning mixing station and separation stations of the Pre-wash area C-129
Cleaning incubator C-132
Cleaning vortex mixing station C-134
Cleaning microbead mixer C-136
Cleaning rinse stations C-138
Every two weeks maintenance C-141
Liquid flow path cleaning C-141
Every three months maintenance C-144
Replacing e 601 pinch valve tubing C-144
As needed C-147
Cleaning ProCell/CleanCell stand and aspiration tubes C-147
Cleaning reagent disk and compartment C-150
Cleaning solid waste compartment C-152
Cleaning instrument surfaces C-154
Finalization C-155
Extended Power OFF procedures C-156
Power OFF 1 ..... C-156
Power OFF 2 ..... C-157
Power ON procedures (after Extended Power OFF) C-160

Maintenance schedule

All maintenance actions are listed in descending frequency.

PO	Power OFF
SB	Stand by
MM	Module Masked
MC	Manual Cleaning

Procedure		Mode	Operator Time (min)	System Time (min)	Page
Daily	Cleaning probes and sippers	MC	5		C-122
Weekly	Cleaning ProCell/CleanCell nozzles and replace reservoirs	MC	8	15	C-125
	Cleaning mixing station and separation stations of the Pre-wash area	MC	5		C-129
	Cleaning incubator	MM	10		C-132
	Cleaning vortex mixing station	MC	2		C-134
	Cleaning microbead mixer	MC	2		C-136
	Cleaning rinse stations	MC	5		C-138
Every 2 weeks	Liquid flow path cleaning	SB	5	30	C-141
Every 3 month	Replacing e 601 pinch valve tubing	SB/PO	5	30	C-144
As Needed	Cleaning ProCell/CleanCell stand and aspiration tubes	SB	5	15	C-147
	Cleaning reagent disk and compartment	MM	10		C-150
	Cleaning solid waste compartment	MM	5		C-152
	Cleaning instrument surfaces	MM	5		C-154
	Finalization	SB			C-155
	Extended Power OFF procedures	SB			C-156

Table C-28 Maintenance schedule

Daily maintenance

In this section you find all the maintenance for the **e** 601 module that must be performed every day.

Cleaning probes and sippers

Clean the reagent probe, sample probe, sipper probes and Pre-wash sippers to remove residual solution and precipitation. Impurities on the sample probe may cause problems and affect results. After cleaning the probe, its discharge and operation should be checked. When cleaning, take care not to bend or damage the probes or sippers.

Operator time approximately 5 minutes

Materials required
- ☐ Lint-free gauze squares
- ☐ Alcohol (e.g. isopropyl alcohol or ethanol)
- ☐ Deionized water
- ☐ Paper towel

Damage to the probes
- Do not bend or damage the lower end of the probes during cleaning. Move the arm gently. Do not move it up and down.
- Use new lint-free gauze square for each probe to prevent cross contamination.
- Do not bend the electrode for LLD inside the reservoir. If they are bent, contact the Roche service representative.

► **To position probes for maintenance**

1. Choose **Utility** > **Maintenance**.
2. Choose **Maintenance** on the **Maintenance Type** list.
3. Choose **(29) Manual Cleaning** on the **Maintenance** Items list.
4. Choose **Select** to display the **Manual Cleaning** window.
5. Select the appropriate **e** 601 module and deselect all other modules and units. Selected modules are highlighted in white.
6. Choose **Execute**. The probes on the selected module(s) move to their cleaning positions. After all movement has stopped, manual cleaning can begin.

■

► To clean probes

1. Touch a screw on the rack sampler unit in order to ground any static charge which may have built-up on you.
2. Open the top cover.
3. To ensure no alcohol drops into the module, place a paper towel underneath the probe.

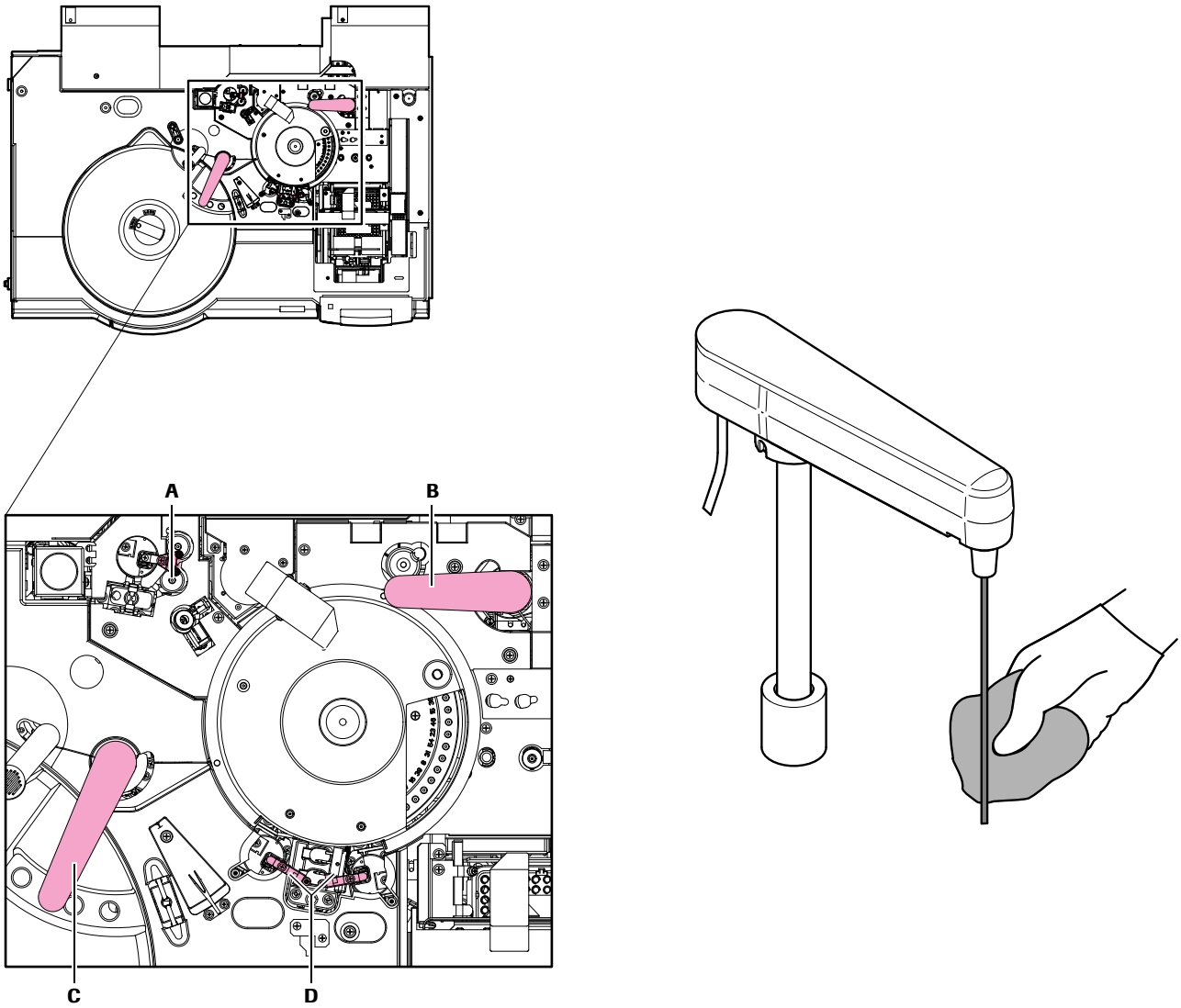

A Pre-wash probes (sipper, dispenser) **C** Reagent probe
B Sample probe **D** Sipper probes for measuring cells 1 and 2

Figure C-49 Cleaning probes and sippers

4 Clean the probes and sippers using the following procedures.

- Sample probe

  Wipe the probe from top to bottom in a downward motion with lint-free gauze square soaked in deionized water.

  If the probe still appears dirty, wipe the outer surface with lint-free gauze square soaked in alcohol, then immediately with deionized water.

- Reagent probe
- Sipper probes for measuring cells 1 and 2
- Pre-wash sipper and dispenser probe

  Wipe each of the probes from top to bottom in a downward motion with lint-free gauze square soaked in alcohol, followed by lint-free gauze square moistened with deionized water.

5 Remove the paper towels from the module.

6 Close top cover and lock it with the key.

7 Choose **Stop** (global button) once cleaning has been completed.

8 Choose **Yes** to stop maintenance after confirmation.

■

► To return probes to standby positions

1 Choose **Utility** > **Maintenance**.

2 Select **Maintenance** on the **Maintenance Type** list.

3 Select **(1) Reset** on the **Maintenance** Items list.

4 Choose **Select** to display the **Reset** window.

5 Select the appropriate **e** 601 module and deselect all other modules and units. Selected modules are highlighted in white.

6 Choose **Execute**. The probes on the selected module(s) return to their standby positions.

■

Weekly maintenance

In this section you find all the maintenance for the **e** 601 module that must be performed at least once a week.

Cleaning ProCell/CleanCell nozzles and replace reservoirs

As ProCell dries, crystals are formed. To prevent problems, the ProCell/CleanCell filling nozzles and electrodes must be cleaned and the reservoirs must be replaced regularly.

This maintenance is divided into 5 procedures and must be performed in the order specified:

- Procedure 1 – To empty ProCell/CleanCell reservoirs
- Procedure 2 – To clean nozzles and electrodes
- Procedure 3 – To replace ProCell/CleanCell reservoirs
- Procedure 4 – To perform Reagent Prime
- Procedure 5 – To perform Finalization

Operator time approximately 8 minutes

System time approximately 15 minutes

Materials required
- ☐ Cotton tipped applicator sticks
- ☐ Deionized water
- ☐ 2 ProCell/CleanCell reservoirs

► **Procedure 1 – To empty ProCell/CleanCell reservoirs**

1. Choose **Utility** > **Maintenance**.
2. Select **Maintenance** from the **Maintenance Type** list.
3. Select **(33) Empty PC/CC Reservoir** from the **Maintenance** Items list.
4. Choose **Select** to display the **Empty PC/CC Reservoir** window.
5. Select the appropriate **e** 601 module and deselect all other modules and units. Selected modules are highlighted in white.
6. Choose **Execute**. The PC/CC reservoirs are emptied.
7. After the procedure has been completed, the **e** 601 module goes into standby mode.

■

► Procedure 2 – To clean nozzles and electrodes

1. Make sure that the module is in standby.
2. Touch a screw on the rack sampler unit in order to ground any static charge which may have built-up on you.
3. Open the top cover.

Damage to the sipper probes

- Do not bend or damage the lower end of the sipper probes during cleaning. Move the arm gently. Do not move it up and down.
- Do not bend the electrode for LLD inside the reservoir. If they are bent, contact the Roche service representative.

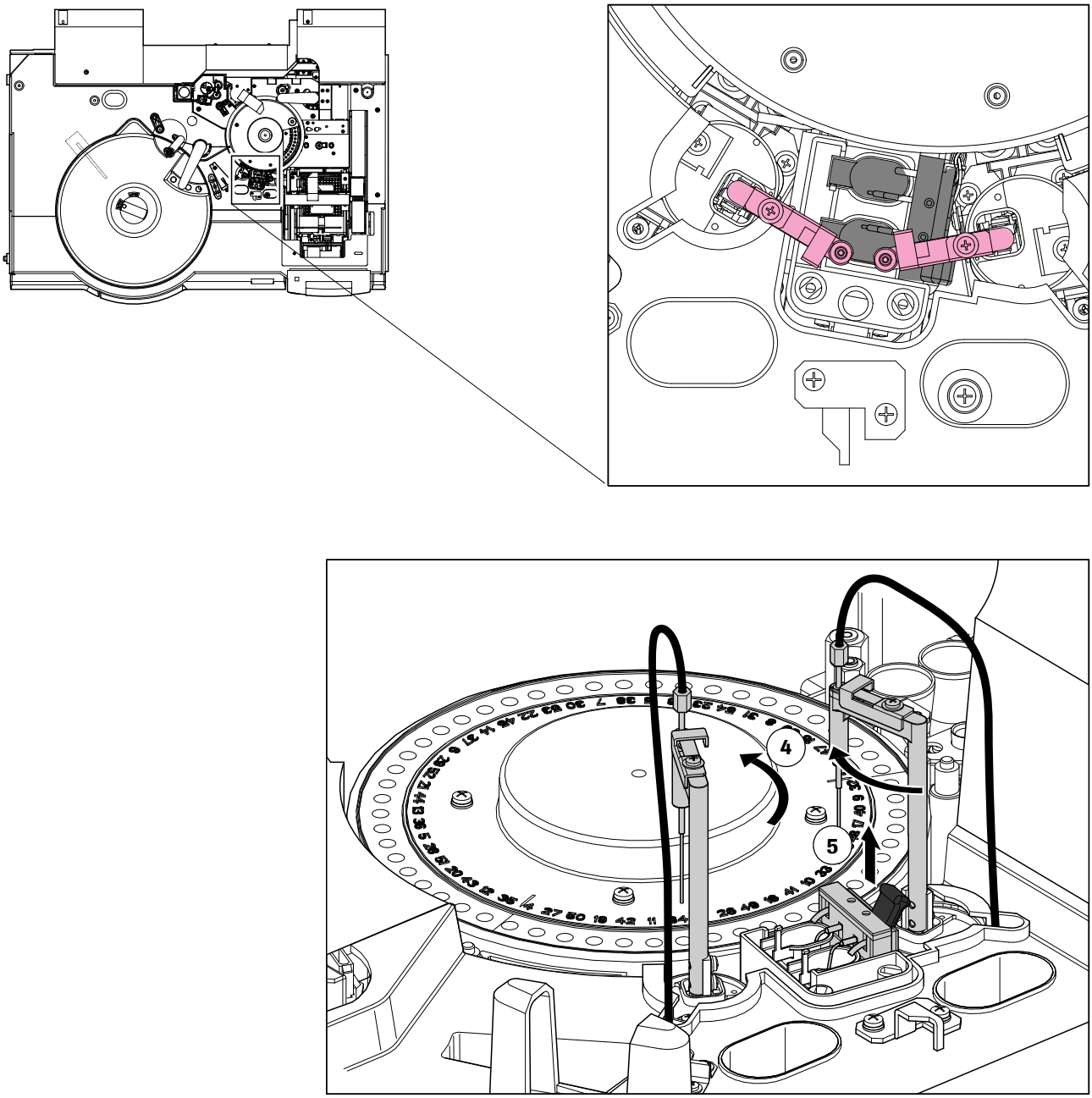

Figure C-50 Move the sipper probes over the incubator

4 Manually move the sipper probes over the incubator.

5 Pull up the unit containing the PC/CC supplier nozzles and the electrodes using the black handle gently to the stop/hold position.

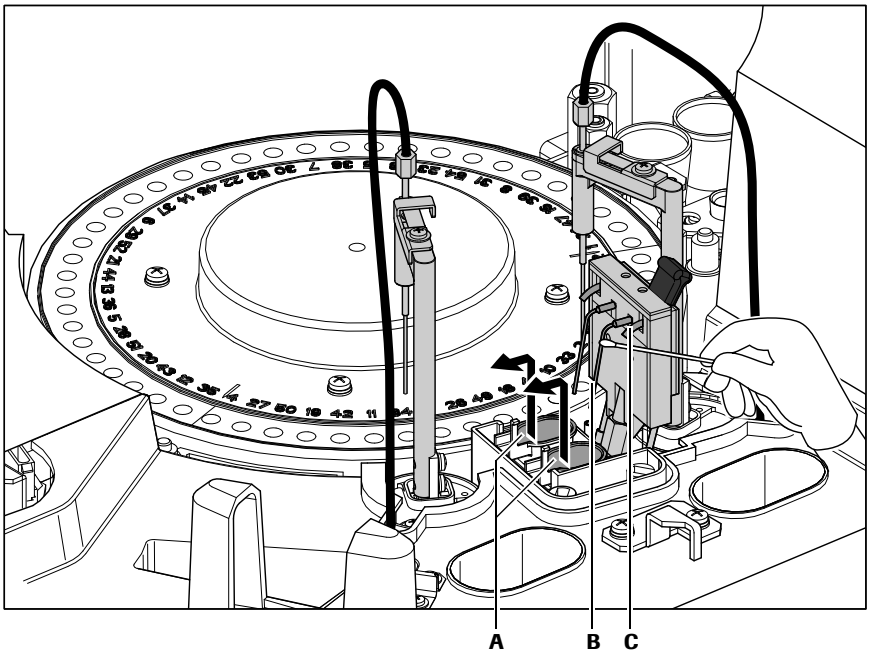

A Reservoirs
B Electrodes
C Reservoir filling nozzle

Figure C-51 Cleaning ProCell/CleanCell reservoir filling nozzle

6 Clean the ProCell/CleanCell reservoir filling nozzle (**B**) and electrodes (**C**) by wiping them with cotton tipped applicator stick soaked in deionized water.

■

► Procedure 3 – To replace ProCell/CleanCell reservoirs

1 Carefully remove the ProCell/CleanCell reservoirs (**A**) (upward /left direction) making sure the electrodes are not bent.

2 Dispose of the ProCell/CleanCell reservoirs according to local regulations.

3 Clean the inside of the reservoir positions by wiping them with cotton tipped applicator stick soaked in deionized water.

4 Place new reservoirs in the reservoir positions and push the sipper nozzle unit back into place.

5 Close the top cover and lock it with the key.

6 Choose **Stop** (global button) once cleaning is complete.

7 Choose **Yes** to stop maintenance after confirmation.

■

► Procedure 4 – To perform Reagent Prime

1 Choose **Utility** > **Maintenance**.

2 Choose **(8) Reagent Prime** in the **Maintenance** Items list.

3 Choose **Select** to display the **Reagent Prime** window.

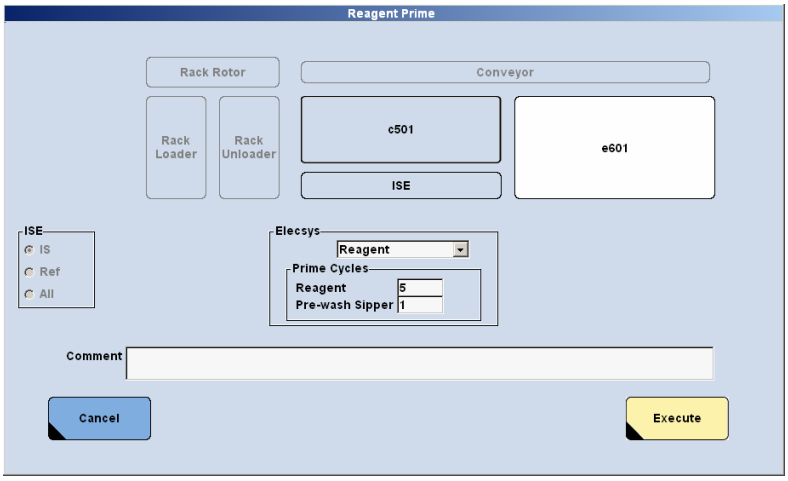

Figure C-52 Reagent Prime window

4 Deselect the **c** 501 module and select the **e** 601 module.

5 In the **Elecsys** area select **Reagent** from the **e** 601 list box. In the **Prime Cycles** area enter 1 for the **Reagent**

6 Choose **Execute** to start reagent priming.

7 Wait until the reagent prime is completed and the instrument enters standby mode, then start finalization.

If, after the maintenance is performed, the instrument is to be powered off or in standby for an extended period of time then a finalization must be performed.

If further samples are to be processed then finalization is not necessary.

■

► Procedure 5 – To perform Finalization

1 Choose **Utility** > **Maintenance**.

2 Choose **(32) Finalization** in the **Maintenance** Items list.

3 Choose **Select** to display the **Finalization** window.

4 Select the appropriate **e** 601 module and deselect all other modules and units. Selected modules are highlighted in white. Channel 1+2 is activated.

5 Choose **Execute** to start finalization. The procedure is complete when the system returns to standby.

■

Cleaning mixing station and separation stations of the Pre-wash area

Spills on the mixing station and the separation stations could cause gripper movement alarms.

Operator time approximately 5 minutes

Materials required
- ☐ Cotton tipped applicator sticks
- ☐ Lint-free gauze squares
- ☐ Deionized water

► To clean Pre-wash mixer and separation station

1. Choose **Utility** > **Maintenance**.
2. Choose **Maintenance** on the **Maintenance Type** list.
3. Choose **(29) Manual Cleaning** on the **Maintenance** Items list.
4. Choose **Select** to display the **Manual Cleaning** window.
5. Select the appropriate **e** 601 module and deselect all other modules and units. Selected modules are highlighted in white.
6. Choose **Execute**. The probes on the selected module(s) move to their cleaning positions. After all movement has stopped, manual cleaning can begin.
7. Touch a screw on the rack sampler unit in order to ground any static charge which may have built-up on you.

8 Open the top cover of the **e** 601 module to be cleaned.

Damage to the probes

Do not bend or damage the lower end of the sipper and dispenser probes during cleaning.

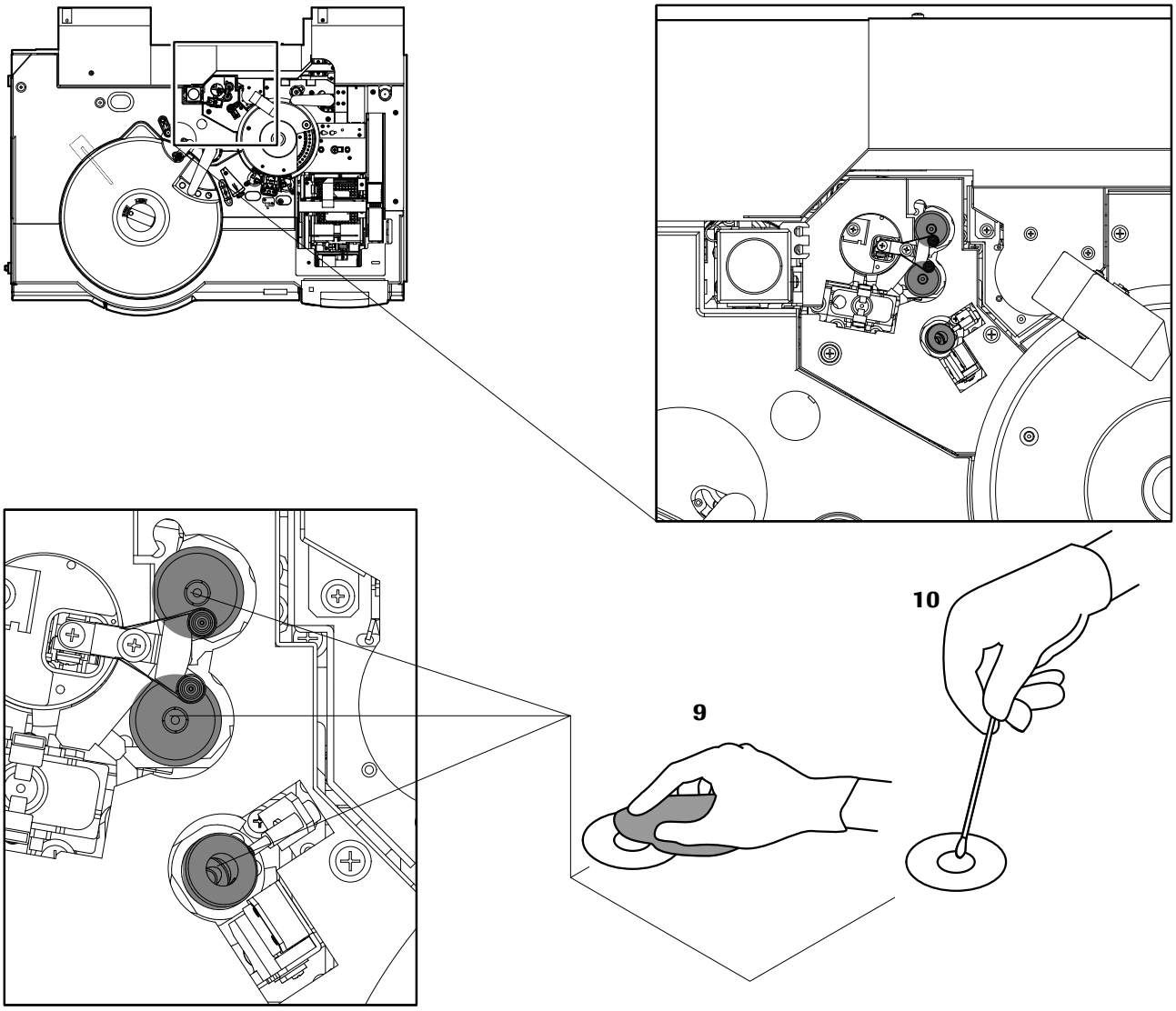

Figure C-53 Cleaning mixing station and separation station

9 Clean the surface of the mixing station and the separation stations with lint-free gauze squares dampened with deionized water. If the mixing station and the separation stations appear dirty, use a slight scrubbing motion with the water-soaked lint-free gauze squares.

10 Next, wet cotton tipped applicator sticks with deionized water and swab the openings on the mixing station and the separation stations.

11 Dry the mixing station and the separation stations with dry lint-free gauze squares and cotton tipped applicator sticks when cleaning is completed.

Ensure that the surface and the openings of the mixing station and the separation stations are dry and not clogged or the gripper may experience problems when operation is resumed.

12 Close the cover and lock it with the key.

13 Choose **Stop** (global button) once cleaning has been completed.

14 Choose **Yes** to stop maintenance after confirmation.

■

► To return mechanical parts to standby position

1 Choose **Utility** > **Maintenance**.

2 Select **Maintenance** from the **Maintenance Type** list.

3 Select **(1) Reset** from the **Maintenance** Items list.

4 Choose **Select** to display the **Reset** window.

5 Select the appropriate **e** 601 module and deselect all other modules and units. Selected modules are highlighted in white.

6 Choose **Execute**. Mechanical parts on the selected **e** 601 module move to their standby positions.

■

Cleaning incubator

Spills on the incubator could cause gripper movement alarms.

Operator time approximately 10 minutes

Materials required
- ☐ Lint-free gauze squares
- ☐ Cotton tipped applicator sticks
- ☐ Deionized water

► To clean the incubator

1. Choose **Start** (global button) > **Masking** > **Module Masking** to display the **Module Masking** screen.
2. Select the **e** 601 module you wish to mask and choose **OK**. The selected **e** 601 module is now masked and goes into standby mode.
3. Touch a screw on the rack sampler unit in order to ground any static charge which may have built-up on you.

4 Open the top cover and move the gripper manually if necessary, to allow the incubator cover to be removed.

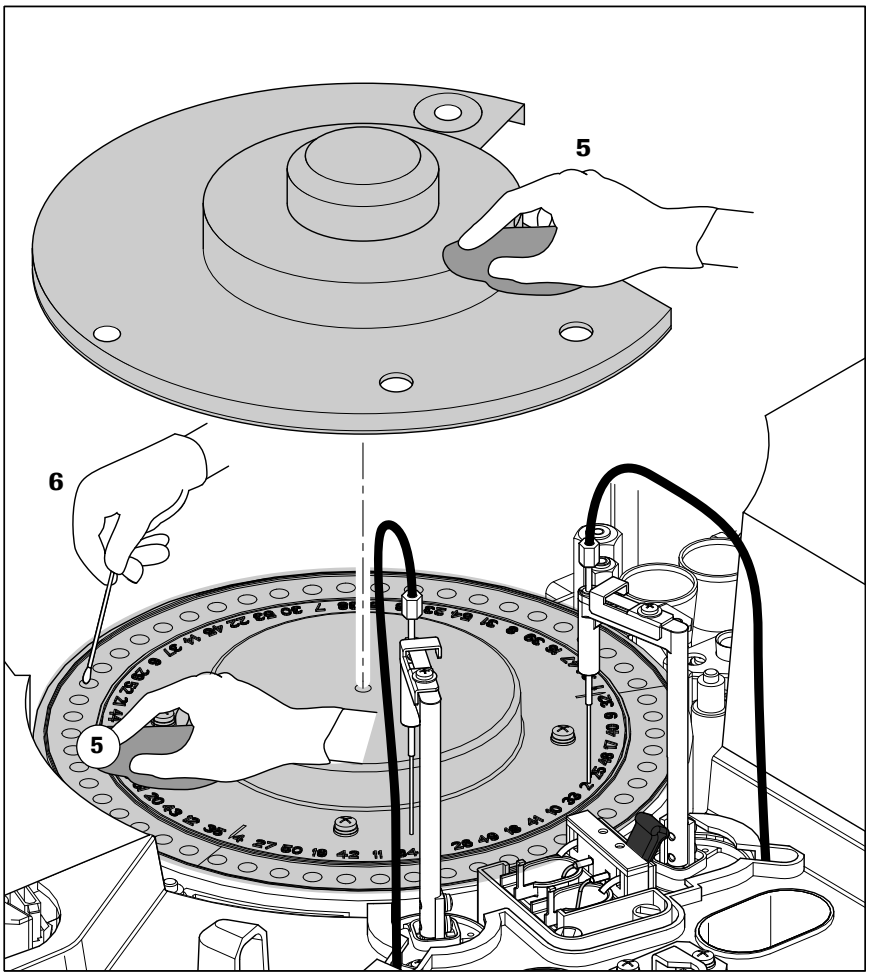

Figure C-54 Cleaning incubator

5 Clean the incubator cover and the top of the incubator with lint-free gauze squares dampened with deionized water. If the incubator or the cover appears dirty, use a slight scrubbing motion with the water-soaked lint-free gauze squares.

6 Next, wet cotton tipped applicator stick with deionized water and swab each of the 54 positions on the incubator.

7 Dry the incubator with dry lint-free gauze squares and cotton tipped applicator sticks when cleaning is completed.

Ensure that the incubator and its positions are dry and not clogged or the gripper may experience problems when operation is resumed.

8 Replace the incubator cover, close the top cover and lock it with the key.

9 Unmask the module at **Start** (global button) > **Masking** > **Module Masking**.

■

Cleaning vortex mixing station

Spills on the vortex mixing station for AssayCups could cause gripper movement alarms.

Operator time approximately 2 minutes

Materials required
- ☐ Lint-free gauze squares
- ☐ Cotton tipped applicator sticks
- ☐ Deionized water

► To clean the vortex mixing station

1. Choose **Utility** > **Maintenance**.
2. Choose **Maintenance** on the **Maintenance Type** list.
3. Choose **(29) Manual Cleaning** on the **Maintenance** Items list.
4. Choose **Select** to display the **Manual Cleaning** window.
5. Select the appropriate **e** 601 module and deselect all other modules and units. Selected modules are highlighted in white.
6. Choose **Execute**. The probes on the selected module(s) move to their cleaning positions. After all movement has stopped, manual cleaning can begin.

7 Touch a screw on the rack sampler unit in order to ground any static charge which may have built-up on you.

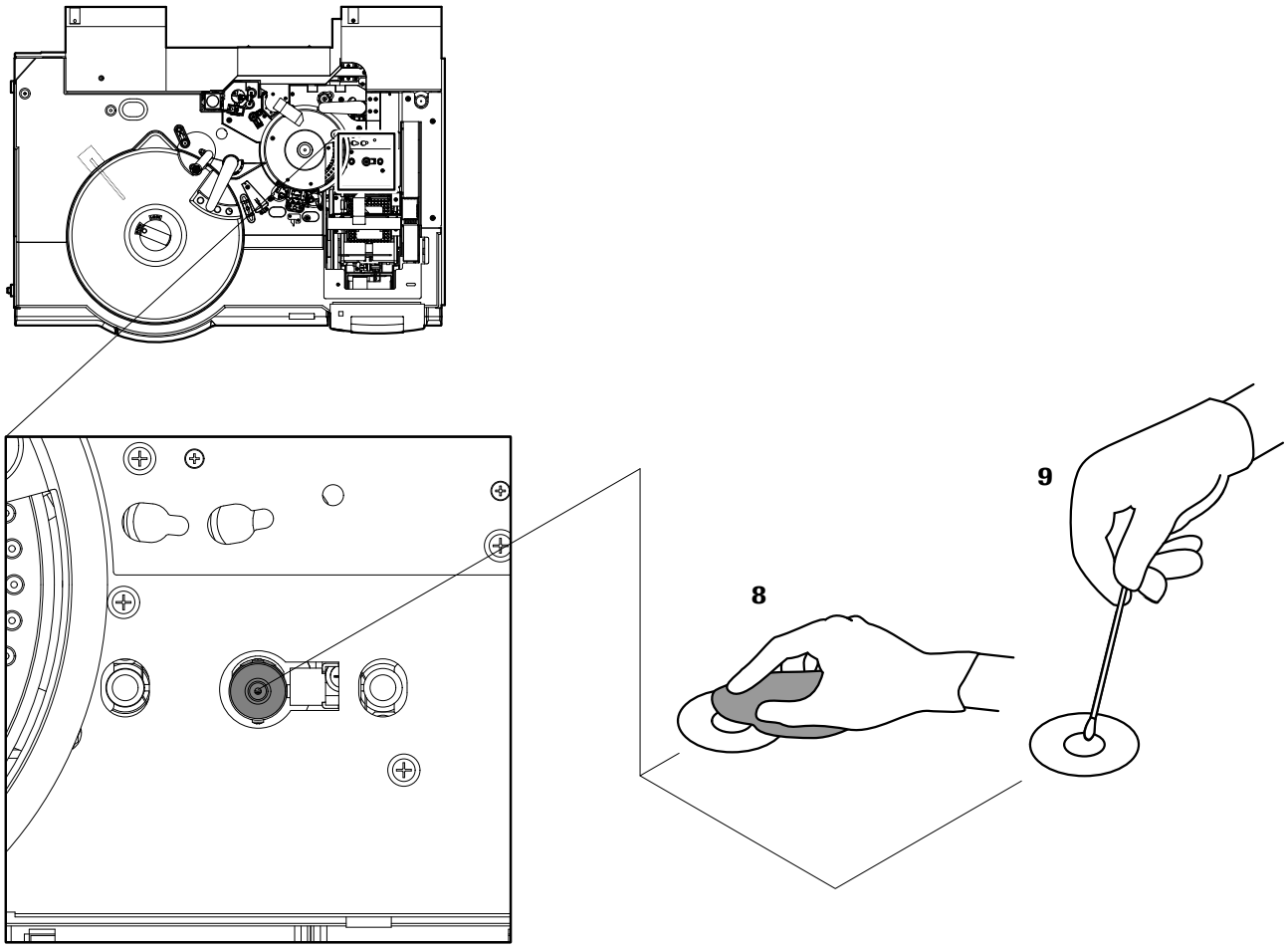

Figure C-55 Cleaning vortex mixing station

8 Clean the surface of the vortex mixing station with lint-free gauze squares dampened with deionized water. If the vortex mixing station appears dirty, use a slight scrubbing motion with the water-soaked lint-free gauze squares.

9 Wet cotton tipped applicator stick with deionized water and swab the opening of the vortex mixing station.

10 Dry the vortex mixing station with dry lint-free gauze squares and cotton tipped applicator sticks when cleaning is completed.

Ensure that the vortex mixing station and its opening are dry and not clogged or the gripper may experience problems when operation is resumed.

11 Close the top cover and lock it with the key.

12 Choose **Stop** (global button).

13 Choose **Yes** to stop maintenance after confirmation.

■

► To return probes to standby positions

1. Choose **Utility** > **Maintenance**.
2. Select **Maintenance** from the **Maintenance Type** list.
3. Select **(1) Reset** from the **Maintenance** Items list.
4. Choose **Select** to display the **Reset** window.
5. Select the appropriate **e** 601 module and deselect all other modules and units. Selected modules are highlighted in white.
6. Choose **Execute**. The probes on the selected **e** 601 module move to their standby positions.

■

Cleaning microbead mixer

Impurities on the microbead mixer may cause problems, and affect results.

Operator time approximately 2 minutes

Materials required
- ☐ Lint-free gauze squares
- ☐ Alcohol (e.g. isopropyl alcohol or ethanol)
- ☐ Deionized water
- ☐ Small Brush

► To clean the microbead mixer

1. Choose **Utility** > **Maintenance**.
2. Choose **Maintenance** on the **Maintenance Type** list.
3. Choose **(29) Manual Cleaning** on the **Maintenance** Items list.
4. Choose **Select** to display the **Manual Cleaning** window.
5. Select the appropriate **e** 601 module and deselect all other modules and units. Selected modules are highlighted in white.
6. Choose **Execute**. The probes on the selected module(s) move to their cleaning positions. After all movement has stopped, manual cleaning can begin.
7. Touch a screw on the rack sampler unit in order to ground any static charge which may have built-up on you.

8 Open the top cover.

Damage to the microbead mixer

- Do not bend the microbead mixer during cleaning.
- Look and make sure the microbead mixer is not bent.

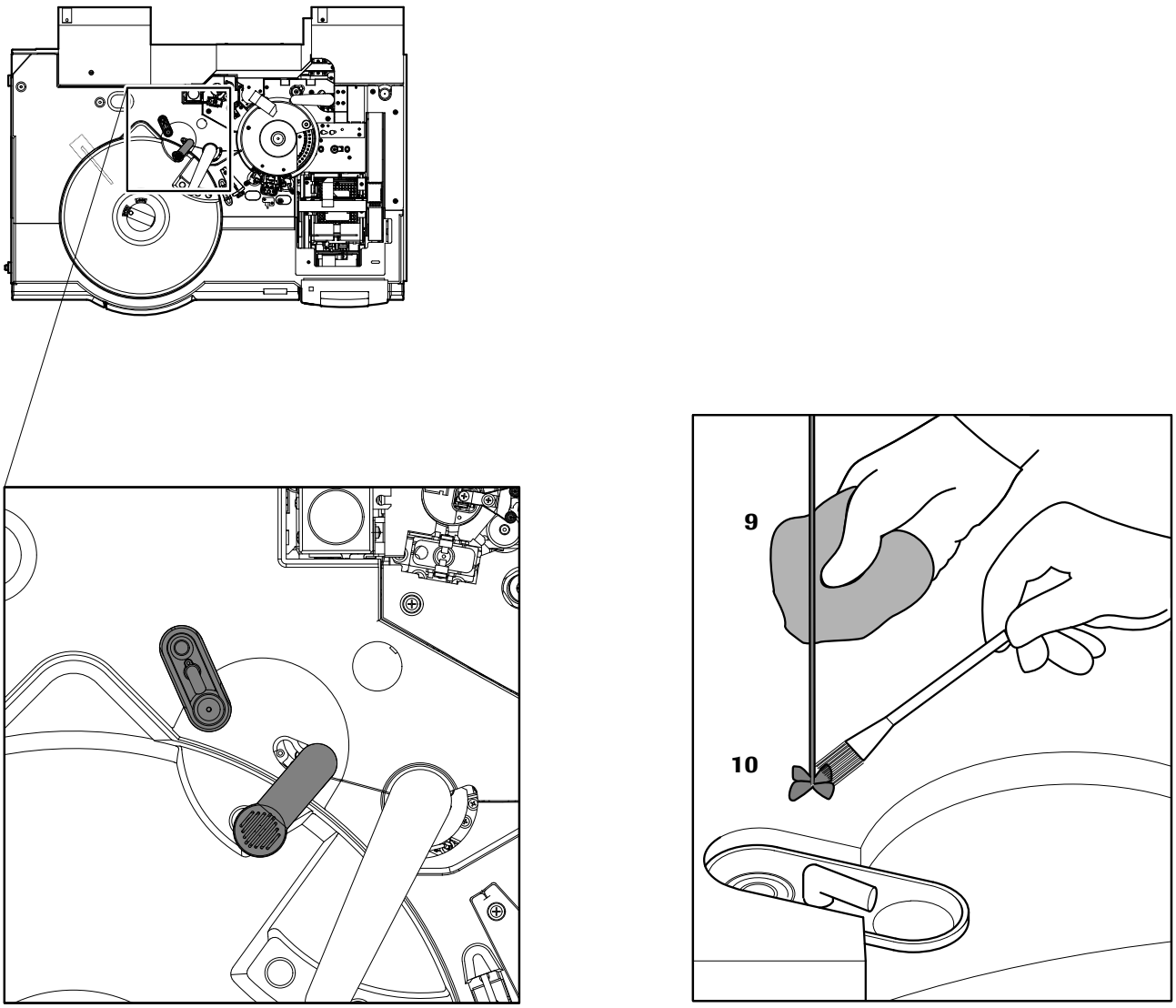

Figure C-56 Cleaning microbead mixer

9 Very carefully wipe the microbead mixer paddle with lint-free gauze square soaked in alcohol from top to bottom.

10 Use a brush to clean the 4 propeller plates with alcohol.

11 Repeat the procedure using deionized water instead of alcohol.

12 Choose **Stop** (global button).

13 Choose **Yes** to stop maintenance after confirmation.

■

► **To return probes to standby positions**

1. Choose **Utility** > **Maintenance**.
2. Select **Maintenance** from the **Maintenance Type** list.
3. Select **(1) Reset** from the **Maintenance** Items list.
4. Choose **Select** to display the **Reset** window.
5. Select the appropriate **e** 601 module and deselect all other modules and units. Selected modules are highlighted in white.
6. Choose **Execute**. The probes on the selected **e** 601 module move to their standby positions.

■

Cleaning rinse stations

Contamination in the rinse stations for the Pre-wash probes, the reagent probe, the microbead mixer, and the sipper probes can cause problems.

Operator time approximately 5 minutes

Materials required
- ☐ Cotton tipped applicator sticks
- ☐ Alcohol (e.g. isopropyl alcohol or ethanol)
- ☐ 2% EcoTergent
- ☐ 50 mL syringe with tubing attached

► **To clean rinse stations**

1. Choose **Utility** > **Maintenance**.
2. Choose **Maintenance** on the **Maintenance Type** list.
3. Choose **(29) Manual Cleaning** on the **Maintenance** Items list.
4. Choose **Select** to display the **Manual Cleaning** window.
5. Select the appropriate **e** 601 module and deselect all other modules and units. Selected modules are highlighted in white.

6 Choose **Execute**. The probes on the selected module(s) move to their cleaning positions. After all movement has stopped, manual cleaning can begin.

7 Touch any screw on the rack sampler unit in order to ground any static charge which may have built-up on you.

8 Open the top cover.

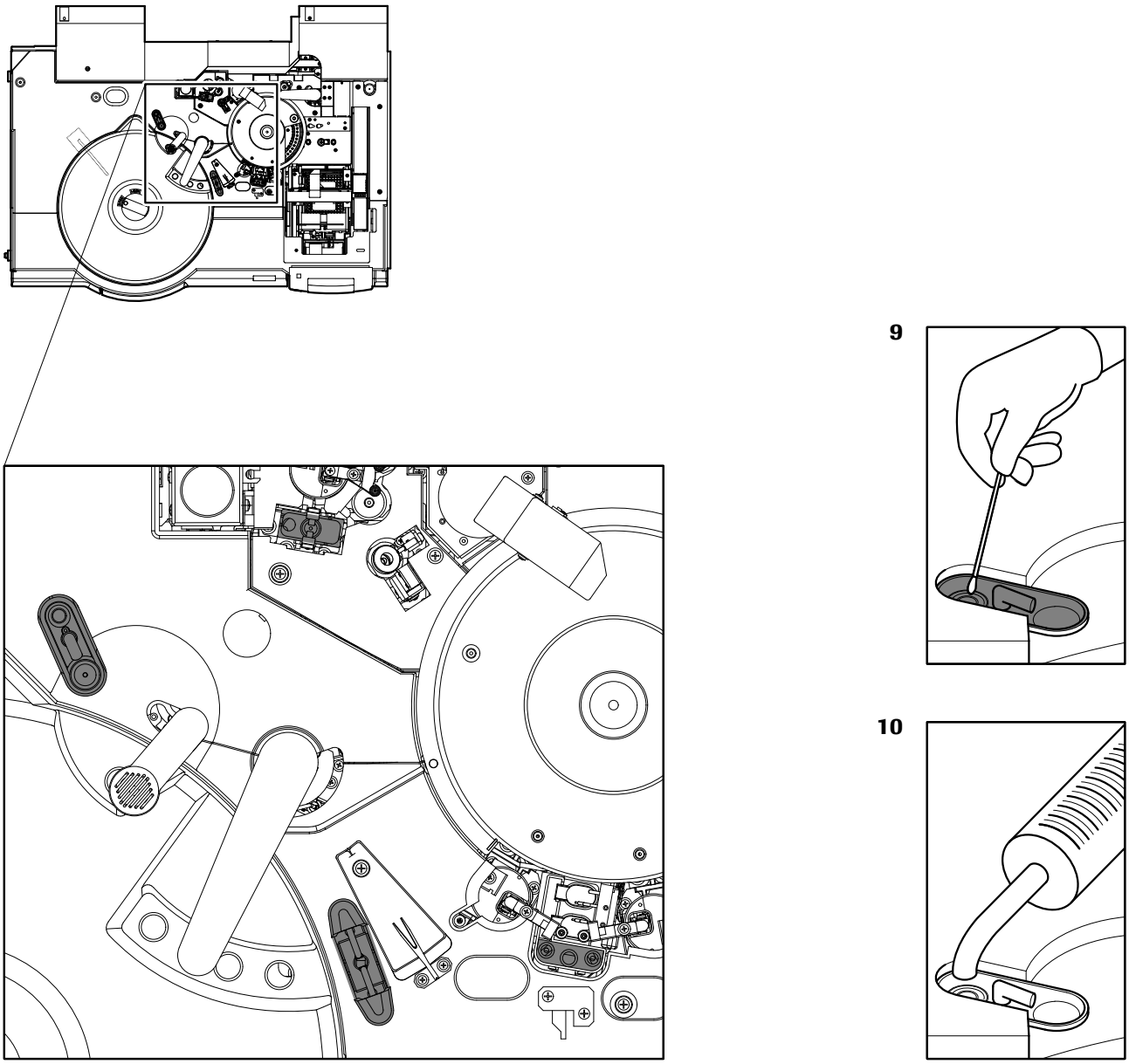

Figure C-57 Cleaning Pre Wash rinse station

9 Clean the inside of each rinse station using cotton tipped applicator stick soaked in alcohol, followed by cotton tipped applicator stick soaked in deionized water.

10 Fill a syringe (with tubing attached) with 50 mL of 2% EcoTergent.

11 Inject the EcoTergent solution (empty the syringe) into the drain hole of the rinse bath.

12 Fill a syringe with 50 mL deionized water.

13 Inject the deionized water (empty the syringe) into the drain hole of the rinse bath.

14 Repeat step 1-13 for all of the probe and stirrer rinse baths on each **e** 601 module.

15 Choose **Stop** (global button).

16 Choose **Yes** to stop maintenance after confirmation.

■

► To return probes to standby positions

1 Choose **Utility** > **Maintenance**.

2 Select **Maintenance** from the **Maintenance Type** list.

3 Select **(1) Reset** from the **Maintenance** Items list.

4 Choose **Select** to display the **Reset** window.

5 Select the appropriate **e** 601 module and deselect all other modules and units. Selected modules are highlighted in white.

6 Choose **Execute**. The probes on the selected **e** 601 module move to their reset positions.

■

Every two weeks maintenance

In this section you find all the maintenance for the **e** 601 module that must be performed at least once every two weeks.

Liquid flow path cleaning

Contamination in the sipper system could cause problems. To keep the flow paths of the sippers clean and maintain the integrity of the measuring cell, perform liquid flow path cleaning at least every two weeks or after 2500 to 3000 determinations per channel, whichever comes first.

Operator time approximately 5 minutes

System time approximately 30 minutes

Materials required
- ☐ 2 SysClean Adapter M
- ☐ SysClean solution

► To prepare Liquid Flow Path Cleaning

1 Open the top cover.

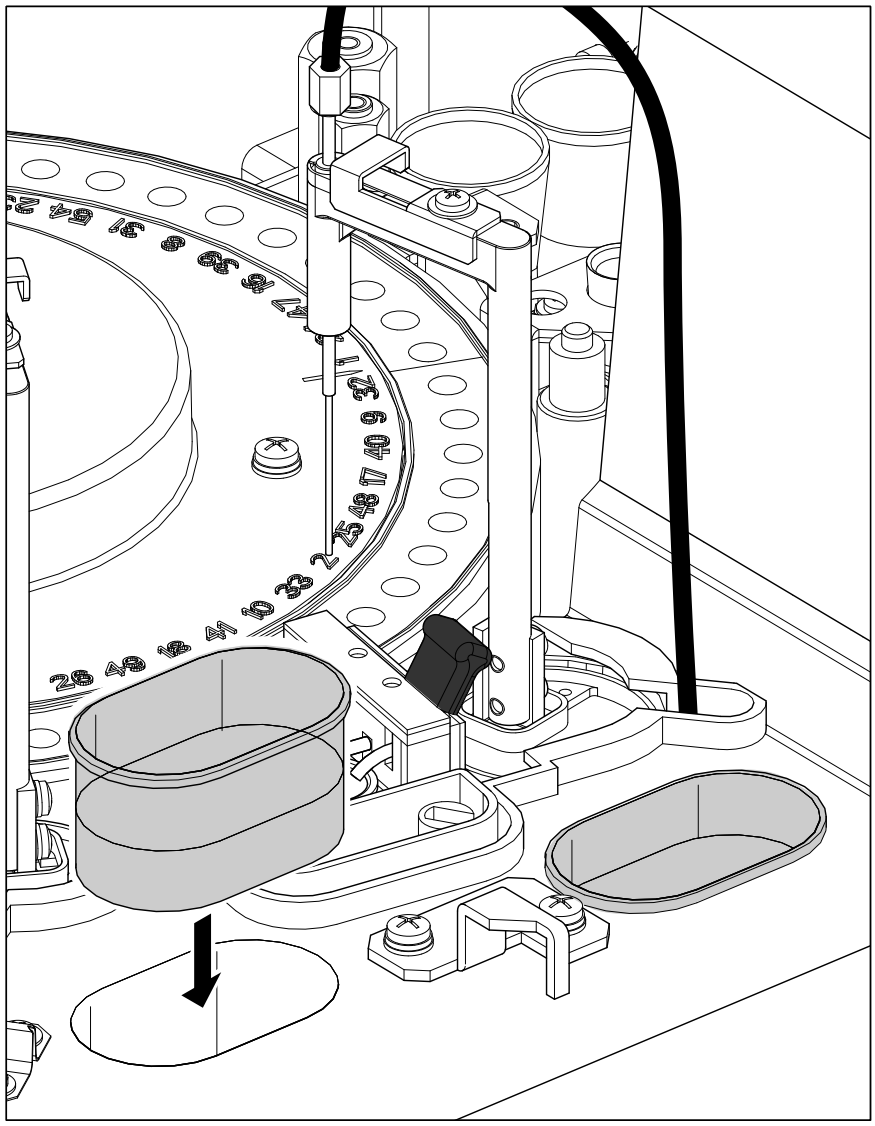

Figure C-58 Placing SysClean Adapter M

2 Fill the SysClean Adapter M with SysClean solution to the lower line (approximately 9 mL/cup).

3 Carefully, insert the filled SysClean cups into the position located in front of the sipper unit to be cleaned.

4 Close the top cover.

■

► To initiate Liquid Flow Path Cleaning

1. Choose **Utility** > **Maintenance**.
2. Select **Maintenance** from the **Maintenance Type** list.
3. Select **(27) Liquid Flow Cleaning** from the **Maintenance** Items list.
4. Choose **Select** to display the **Liquid Flow Path Cleaning** window.
5. Select the appropriate **e** 601 module and deselect all other modules. Selected modules are highlighted in white.
6. Select the **Ch1,2** option and enter *1* in the **Cycles** text box and choose **Execute**.

■

► Post-cleaning steps

1. Open the top cover.
2. Remove the SysClean Adapter M.
3. Dispose of any remaining SysClean solution according to local regulations.
4. Rinse the SysClean Adapter M(s) thoroughly with deionized water.

■

Every three months maintenance

In this section you find all the maintenance for the **e** 601 module that must be performed at least once every three months.

Replacing e 601 pinch valve tubing

Pinch valve tubings wear out in the course of time. To rule out the risk of defective tubings replace **e** 601 pinch valve tubings every 3 months or after measuring 25,000 tests per measuring cell.

Operator time approximately 5 minutes

System time approximately 30 minutes

Materials required
- ☐ Pinch valve tubing
- ☐ Lint-free gauze pads
- ☐ Protective equipment (gloves, paper towels)

► **To replace e 601 pinch valve tubings**

1. Perform maintenance item (26) MC Exchange before removing the tubes, to avoid dripping of fluid on the valves.
2. Shut down the system or put the **e** 601 module into standby mode.

3 Locate the **e** 601 pinch valve tubings behind the front door of the **e** 601 module.

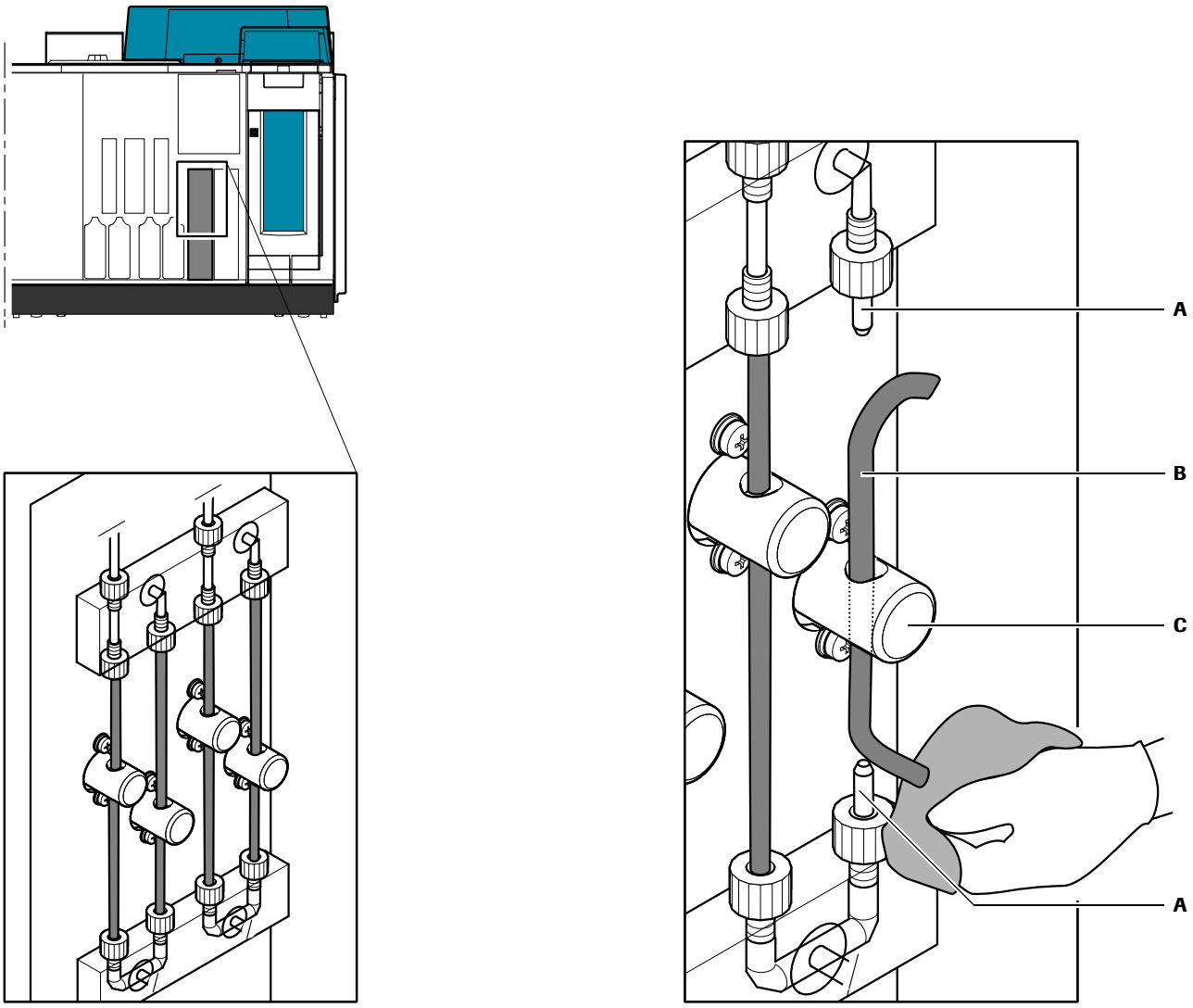

A Tube fitting **B** Tube **C** Pinch valve

Figure C-59 Replacing **e** 601 pinch valve tubing

4 Carefully remove (pull) all 4 pinch valve tubings (**B**) from the fittings (**A**).

5 Dispose of the pinch valve tubings according to local regulations.

6 Use a dry gauze pad to absorb liquid which drains from the acrylic block or from the tubing.

7 Take new pinch valve tubing and insert it through the pinch valve (**C**).

8 Carefully slide the ends of the tubing over each fitting (**A**).

■

After replacement of the **e** 601 pinch valve tubing it is necessary to perform 2 maintenance items before resuming operation:

- (24) Sipper Air Purge
- (25) MC Preparation

► To perform Sipper Air Purge

1. Start up the instrument.
2. After initialization is finished, choose **Utility** > **Maintenance**.
3. Select **(24) Sipper Air Purge** from the **Maintenance** Items list on the right and choose **Select** to display the **Sipper Air Purge** window.
4. Select the appropriate **e** 601 module and deselect all other modules and units. Selected modules are highlighted in white.
5. Enter 10 in the **Cycles** box and choose **Execute** to initiate the Sipper Air Purge.

   While the air purge is executed, inspect the syringe to ensure that no air remains in the syringe and no leaks are visible at any of its fittings. Also check that the sufficient amount of water is discharged from the sipper probe.

■

► To perform MC Preparation

1. After sipper air purge is finished, select **(25) MC Preparation** from the **Maintenance** Items list on **Utility** > **Maintenance**.
2. Choose **Select** to display the **MC Preparation** window.
3. Select the appropriate **e** 601 module and deselect all other modules and units. Selected modules are highlighted in white.
4. Under **Channel** select **Ch1,2**. If only one tube has been replaced, choose the appropriate measuring channel.
5. Enter 10 in the **Cycles** box and choose **Execute** to initiate the maintenance function.

   Again, check for leaks at the fittings and on the tubings while the system is performing the maintenance function.

■

As needed

In this section you find all the maintenance for the **e** 601 module that must be performed as needed and are not subject to a regular time schedule.

Cleaning ProCell/CleanCell stand and aspiration tubes

Clean ProCell and CleanCell stand and aspiration tubes if crystallization is observed.

Operator time approximately 5 minutes

System time 15 minutes

Materials required
- ☐ Lint-free gauze squares
- ☐ ProCell/CleanCell bottle caps
- ☐ Paper towels
- ☐ Deionized water

► To clean ProCell/CleanCell stand and aspiration tubes

1 Open the middle door of the **e** 601 module to be cleaned.

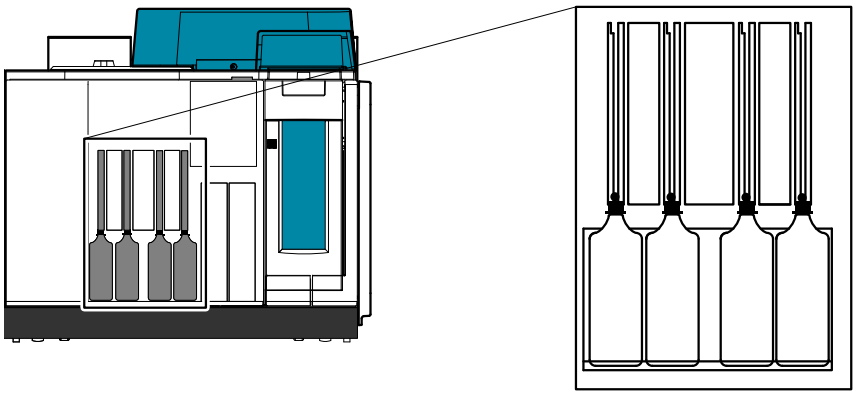

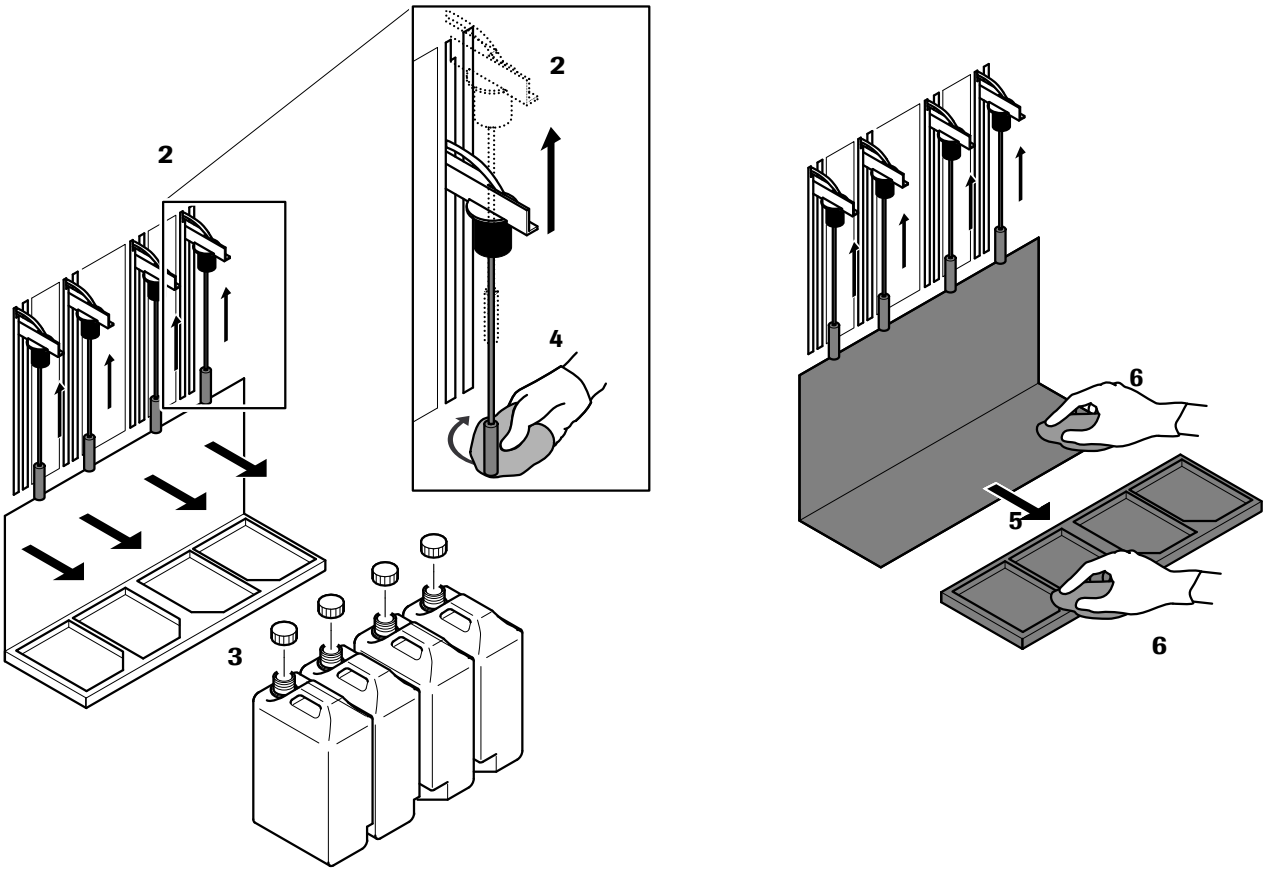

Figure C-60 Cleaning ProCell/CleanCell stand and aspiration tubes

2 Pull the aspiration tubes up and to the left to secure them on their respective notches.

3 Cap the ProCell and CleanCell reagent bottles and remove them from the **e** 601 module.

Droplets of ProCell and CleanCell may drip when ProCell and CleanCell bottles are removed. If this occurs, use paper towels to wipe up the liquid.

4 Wipe the aspiration tubes with lint-free gauze squares soaked with deionized water and then dry them with dry lint-free gauze squares.

5 Remove the ProCell and CleanCell stand from the module.

6 Clean the stands with lint-free gauze squares soaked with deionized water and then dry them with dry lint-free gauze squares.

7 It may be necessary to clean inside the instrument surface. Use lint-free gauze square with water and dry after.

CAUTION! False results due to ProCell/CleanCell bottle misplacement. ProCell and CleanCell bottles are different in shape to fit the keyed position of the bottle stand.

8 Replace the ProCell and CleanCell stand in the module.

9 Replace the ProCell and CleanCell reagent bottles in their original positions and remove the caps.

CAUTION! False results due to loose ProCell/CleanCell aspiration tube filters. Make sure the aspiration tube is pulled up and hooked on to its notch, before removing the bottle. After replacing the bottle, unhook the aspiration tube and lower it slowly into the bottle, do not let it drop into the bottle.

10 Guide the aspiration tubes into the bottles.

11 Close the middle door of the **e** 601 module.

■

As needed

Cleaning reagent disk and compartment

Clean reagent spills as they occur. Clean the reagent disk as needed.

Operator time approximately 10 minutes

Materials required
- ☐ Lint-free gauze squares
- ☐ Alcohol (e.g. isopropyl alcohol or ethanol)
- ☐ Deionized water
- ☐ Cloth or lint-free towels

► **To remove reagent disk and clean the reagent disk and compartment**

1 Ensure the system is in standby.

Damage to the microbead mixer
- Do not bend the microbead mixer when cleaning the reagent disk compartment.
- Avoid contact with the microbead mixer when removing and replacing the cover and reagent disk.

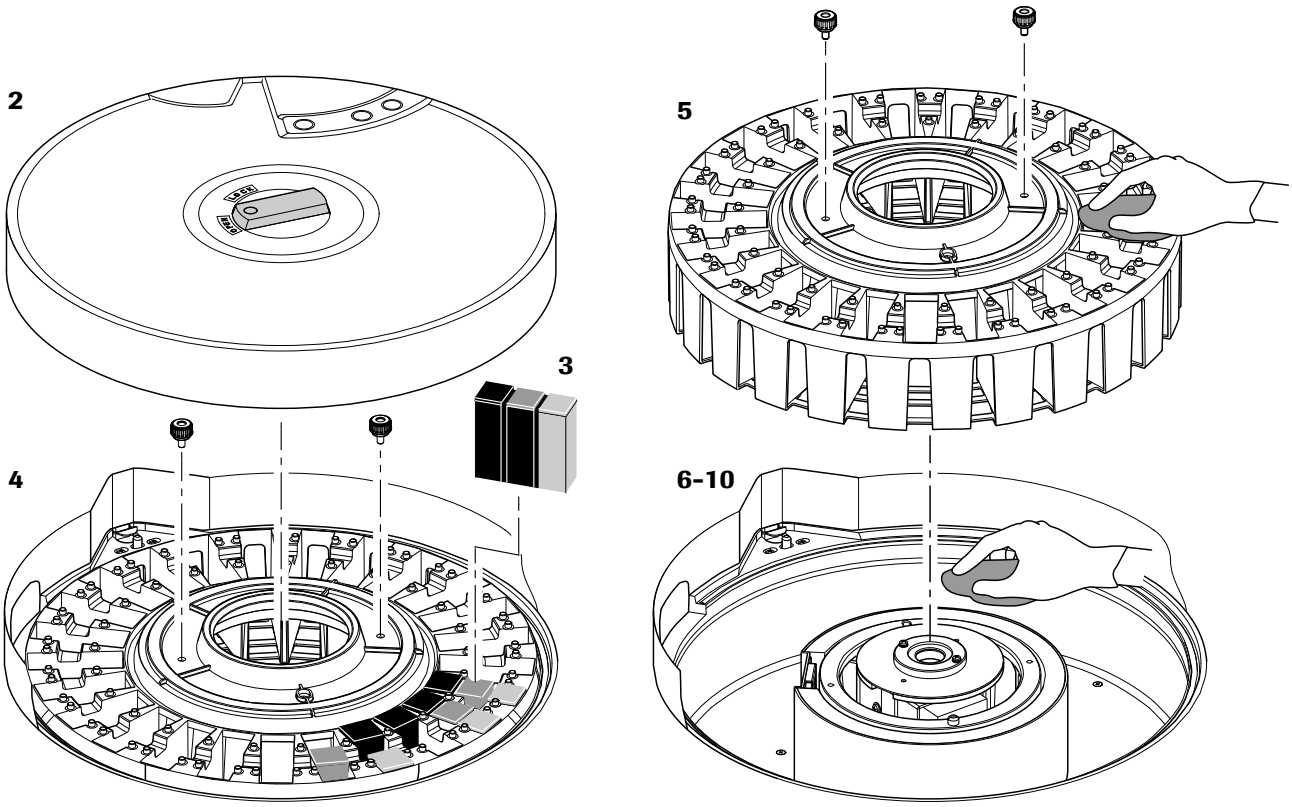

Figure C-61 Cleaning reagent disk and compartment

2 Remove the cover from the reagent disk.

3 Completely close the **cobas e** pack caps and remove all the **cobas e** packs from the reagent disk.

4 Loosen and remove the black thumbscrews.

5 Remove the reagent disk from the compartment.

6 Wipe the inside and outside of the reagent disk with lint-free gauze squares soaked with deionized water.

7 If the disk appears dirty, use lint-free gauze squares soaked with alcohol to clean the disk. Follow with lint-free gauze squares soaked with deionized water.

8 Dry the reagent disk with a cloth or lint-free towels. Set the reagent disk aside.

Do not scratch or smear the barcode reader window as this may cause barcode reading errors.

9 Wipe the reagent disk compartment with lint-free gauze squares soaked with deionized water.

If the compartment appears dirty, use lint-free gauze squares soaked with alcohol to clean the compartment. Follow with lint-free gauze squares soaked with deionized water.

10 Dry the reagent disk compartment with a cloth or lint-free towels.

■

► To reinstall reagent disk

1 Return the reagent disk to the compartment. Make sure that the alignment pin on the center plate is aligned with the opening on the disk.

2 Securely reinstall the thumbscrews.

3 Place the **cobas e** packs back into the reagent disk.

4 Replace the reagent disk cover and lock.

■

Cleaning solid waste compartment

Check the waste compartment when emptying the solid waste containers. If the compartment is dirty and requires cleaning, follow the procedures below.

Operator time approximately 5 minutes

Materials required
- ☐ Lint-free gauze squares
- ☐ Laboratory disinfectant (no alcohol or bleach)
- ☐ Deionized water
- ☐ WasteLiner M

Damage to the solid waste compartment

Do not use alcohol or bleach to clean the solid waste compartment as this may damage the compartment.

► To clean the solid waste compartment

1. Choose **Start** (global button) > **Masking** > **Module Masking** to display the **Module Masking** screen.
2. Select the **e** 601 module which is to be cleaned and choose **OK**. The selected **e** 601 module is now masked and goes into **Module Masking**.

Masking a module prior to performing maintenance ensures that the system does not allocate samples to this module and selectively stops the operation of this module. In this state, the operator can clean the instrument surface safely.

3 Wait until the green indicator lamp (**A**) on the top of the drawer is illuminated, then open the magazine drawer on the right of the module.

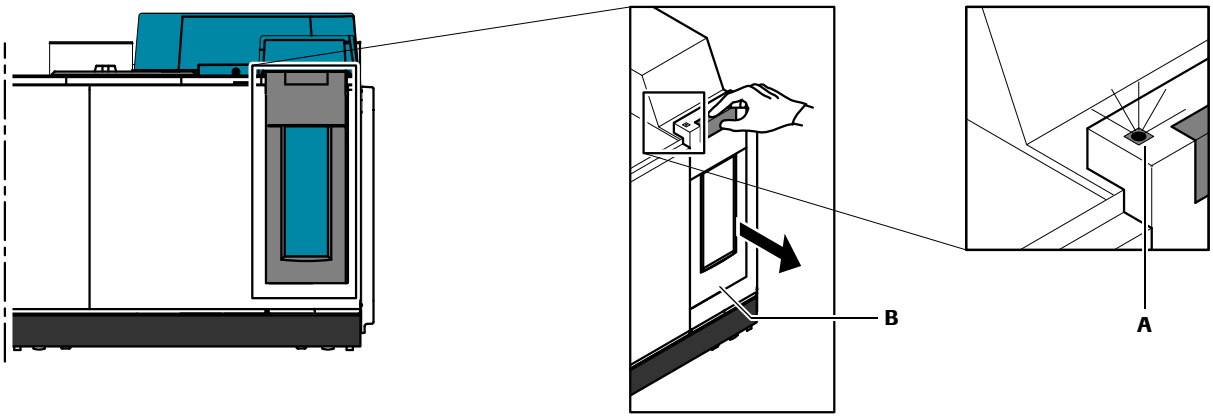

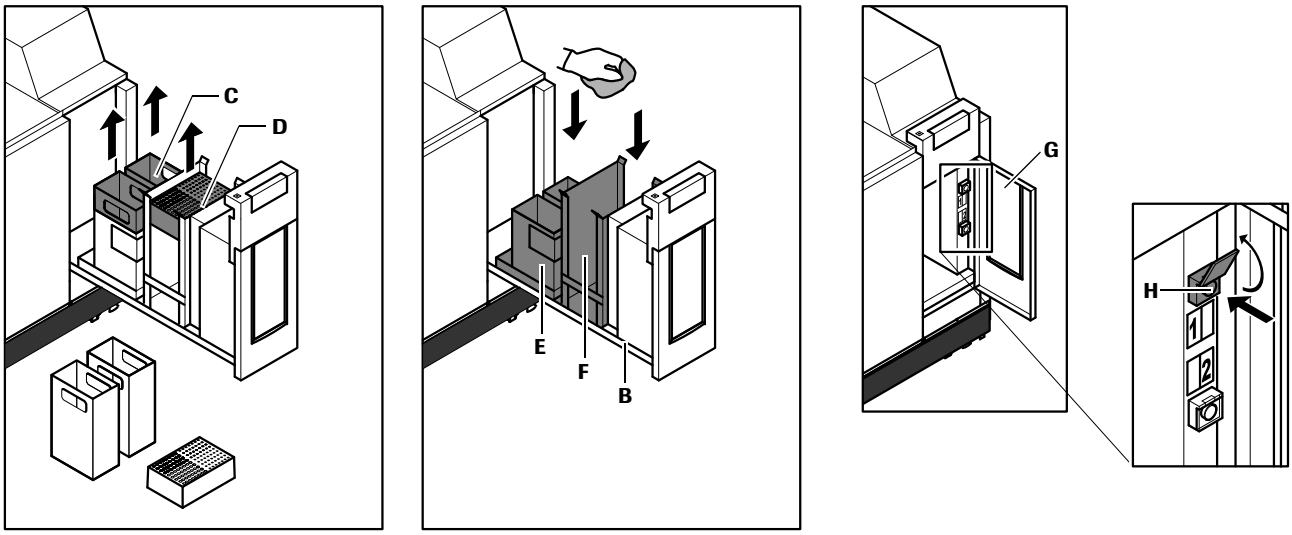

A Indicator lamp
B Magazine drawer
C WasteLiners
D Empty magazines
E Solid waste containers
F Magazine waste compartment
G Drawer door
H Green button (for inventory update)

Figure C-62 Consumables area components

4 Open the magazine drawer (**B**) on the right of the module.

5 Remove both WasteLiners (**C**) from the solid waste containers and the empty magazines (**D**) from the magazine waste compartment.

6 Wipe the inside and outside of the solid waste container (**E**) and the magazine waste compartment (**F**) with lint-free gauze squares soaked with disinfectant.

7 Wipe the inside and outside of the solid waste container (**E**) and the magazine waste compartment (**F**) again, this time using lint-free gauze squares soaked with deionized water.

If the area surrounding the waste containers appears to be dirty, it should also be cleaned using the same procedure.

8 Place new WasteLiners into the waste containers.

9 Close the drawer, ensuring that it is fully closed.

10 Open the transparent door (**G**) at the front of the drawer.

11 Press the green button (**H**) corresponding to the container(s) emptied to update the inventory. These buttons flash for a moment and then light green.

12 Close the door ensuring that it is fully closed.

■

- Ensure that the door at the front of the drawer is closed. Otherwise, the magazine lifter detects the open door the next time it operates and the system stops.
- The inventory is updated and displayed on the **Reagent Overview** window.

Cleaning instrument surfaces

Spills on the instrument surface could be potentially biohazardous and damage the surface.

Operator time approximately 5 minutes

System time 0 minutes

Materials required
- ☐ Cloth or paper towels
- ☐ Laboratory disinfectant (no bleach)

► To clean instrument surfaces

1 Choose **Start** (global button) > **Masking** > **Module Masking** to display the **Module Masking** screen.

2 Select the **e** 601 module you wish to mask and choose **OK**. The selected **e** 601 module is now masked and goes into module masking mode.

3 Touch a screw on the rack sampler unit in order to ground any static charge which may have built-up on you.

4 Open the top cover of the module.

5 Clean the module surfaces using a cloth or paper towel moistened with disinfectant. Clean up all spills immediately. Use this procedure to ensure that surfaces are clean. If necessary, move the probes or units manually to clean the surface.

6 Close the top cover and lock it with the key.

7 Unmask the module at **Start** (global button) > **Masking** > **Module Masking**.

■

Finalization

Finalization allows the module to stand unused for several hours (for example, overnight). The system is primed with water, the measuring cells are filled with ProCell, and the sipper probes are cleaned with water.

Before going into standby mode, the system automatically performs finalization maintenance. Finalization must be manually initiated if finalization was not performed automatically (due to emergency stop, for example) or did not complete (alarm is issued) and the system will stand unused for several hours.

Always start finalization in combination with reagent prime. Never perform finalization alone.

► To perform Reagent Prime

1 Choose **Utility** > **Maintenance**.

2 Choose **(8) Reagent Prime** in the **Maintenance** Items list.

3 Choose **Select** to display the **Reagent Prime** window.

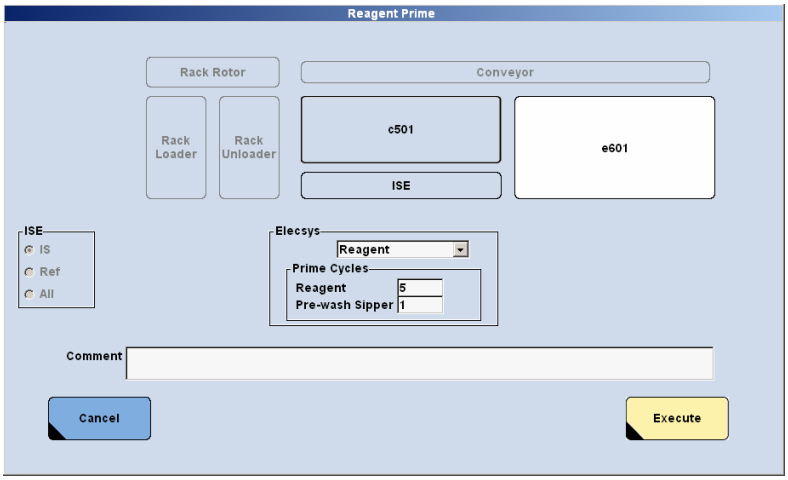

Figure C-63 Reagent Prime window

4 Deselect the **c** 501 module and select the **e** 601 module.

5 In the **Elecsys** area select **Reagent** from the **e** 601 list box. In the **Prime Cycles** area enter 1 for the Reagent.

6 Choose **Execute** to start reagent priming.

7 Wait until the reagent prime completes and the instrument enters standby, then start finalization.

■

► **To perform Finalization**

1. Choose **Utility** > **Maintenance**.
2. Choose (32) Finalization in the **Maintenance** Items list.
3. Choose **Select** to display the **Finalization** window.
4. Select the appropriate **e** 601 module and deselect all other modules and units. Selected modules are highlighted in white. Channel 1+2 is activated.
5. Choose **Execute** to start finalization.
6. After the procedure has been completed, the system goes into standby.

■

Extended Power OFF procedures

If the system is not used for an extended period of time, it is important to ensure that the system is properly prepared and that the correct shut down maintenance has been performed.

Time period (Days)	Power OFF procedure	Power ON procedure
1 to 2	Power OFF 1	Power ON 1
3 to 7	Power OFF 2	Power ON 2
8 or more	When the instrument was not in use for a period longer than 8 days, call Roche service representative. The necessary procedure is performed by your Roche service representative.	

Table C-29 Extended power OFF procedures

Power OFF 1

Power OFF 1 Use this procedure if the instrument will not be in use for 1 to 2 days (e.g., a weekend).

► **Power OFF 1**

1. Choose **Shut Down** (global button) to display the **Shut Down** window.
2. Select the **Shut Down** option and choose **Execute** to confirm the shutdown.
3. Wait until the computer power supply turns off. Then, switch off the power switch of the printer and monitor.

   CAUTION! Damage to the control unit or data loss. Before switching-off of the analyzer, make sure the monitor indication has changed from shutdown to a state where nothing is displayed.
4. Switch off the operation power switch on the left side face of the rack sampler unit.
5. Turn off the water supply.

■

Power OFF 2

Use the following procedure if the instrument will not be used for 3 to 7 days.

System time approximately 45 minutes

The maintenance items listed in this procedure can be programmed as a maintenance pipe.

See *Recommended maintenance pipes* on page C-32.

► To perform Liquid Flow Path Cleaning

For a detailed description of this procedure, see *Liquid flow path cleaning* on page C-141.

1. Open the top cover.
2. Fill the SysClean Adapter M with SysClean solution to the lower line (approximately 9 mL/cup).
3. Carefully, insert the filled SysClean cups into the position located in front of the sipper unit to be cleaned.
4. Close the top cover.
5. Choose **Utility** > **Maintenance**.
6. Select **Maintenance** from the **Maintenance Type** list.
7. Select **(27) Liquid Flow Cleaning** from the **Maintenance** Items list.
8. Choose **Select** to display the **Liquid Flow Path Cleaning** window.
9. Select the appropriate **e** 601 module and deselect all other modules. Selected modules are highlighted in white.
10. Select the **Ch1,2** option and enter *1* in the **Cycles** text box and choose **Execute**.

■

Ensure the system has returned to standby mode before continuing.

► To remove reagents and consumables

1 Remove the reagent cover and press the caps of each **cobas e** pack down to close them. Remove all **cobas e** packs from the reagent disk(s). Refrigerate them in the same manner as unused **cobas e** packs. The **cobas e** packs can be used again.

2 Remove all magazines from the magazine lifter, and magazine waste. Ensure that no AssayTips or AssayCups are present on the module.

Dispose of the magazine waste according to local regulations.

3 Choose **Utility** > **Maintenance**.

4 Select **Check** from the **Maintenance Type** list.

5 Select **(14) Magazine Exchange Check** from the **Maintenance** Items list.

6 Enter *1* in the **Cycles** text box. A caution alarm is issued because there are no AssayTips or AssayCups available.

7 Remove the WasteLiners and replace with fresh ones.

Dispose of the WasteLiners according to local regulations.

8 Remove the ProbeWash, ProCell, CleanCell and PreClean bottles. Replace them with new bottles filled with deionized water.

9 Remove the SysClean Adapters from the instrument.

■

► To perform Reagent Prime

1 Choose **Utility** > **Maintenance**.

2 Choose **(8) Reagent Prime** in the **Maintenance** Items list.

3 Choose **Select** to display the **Reagent Prime** window.

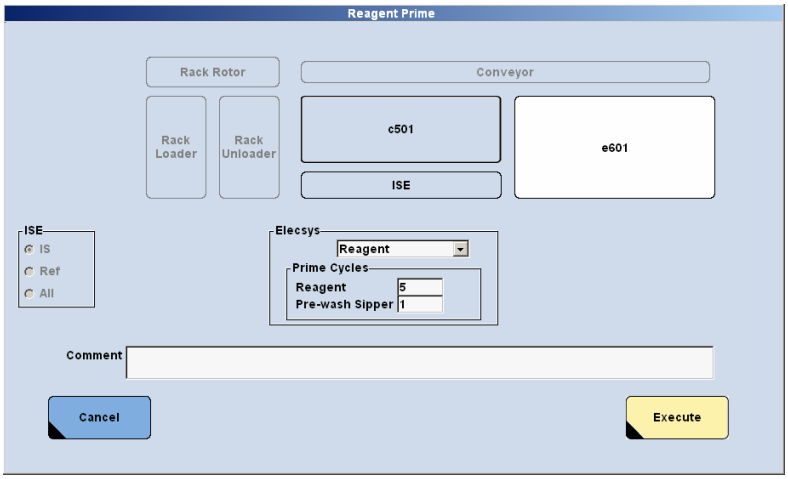

Figure C-64 Reagent Prime window

4 Deselect the **c** 501 module and select the **e** 601 module.

5 In the **Elecsys** area select **Reagent** from the **e** 601 list box. In the **Prime Cycles** area enter 5 for the **Reagent**.

6 Choose **Execute** to start reagent priming.

7 Display the **Reagent Prime** window a second time

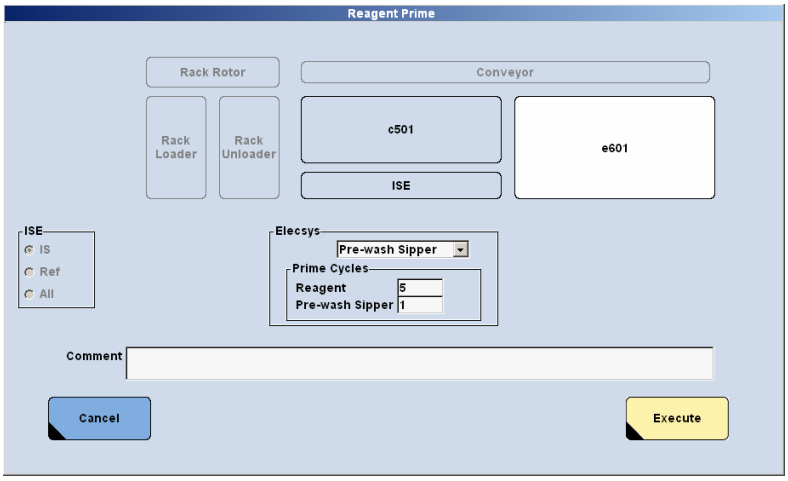

Figure C-65 Reagent Prime window

8 In the **Elecsys** area select **Pre-wash Sipper** from the **e** 601 list box. In the **Prime Cycles** area enter *5* for the **Pre-wash Sipper**

9 Choose **Execute** to start reagent priming.

■

► To empty PC/CC reservoirs

1 Select **(33) Empty PC/CC Reservoir** from the **Maintenance** Items list on **Utility** > **Maintenance**. Choose **Select** to display the **Empty PC/CC Reservoir** window.

2 Select the appropriate **e** 601 module and deselect all other modules. Selected modules are highlighted in white.

3 Choose **Execute**. The PC/CC reservoirs are emptied.

■

► To perform Sipper Air Purge

1 Select **(24) Sipper Air Purge** from the **Maintenance** Items list on **Utility** > **Maintenance**. Choose **Select** to display the **Sipper Air Purge** window.

2 Select the appropriate **e** 601 module and deselect all other modules. Selected modules are highlighted in white.

3 Enter *10* in the **Cycles** text box and choose **Execute** to perform the Sipper Air Purge.

4 Remove the ProCell and CleanCell reservoir cups.

■

► To perform daily and weekly maintenance items and finish Power OFF

1 Perform all Daily and Weekly maintenance items excluding Reagent Prime and Finalization.

For more information, see:
Daily maintenance on page C-122
Weekly maintenance on page C-125

2 Choose **Shut Down** (global button) to display the **Shut Down** window.

3 Select the **Shut Down** option and choose **Execute** to confirm the shutdown.

4 Wait until the computer power supply turns off. Then, switch off the power switch of the printer and monitor.

CAUTION! Damage to the control unit or data loss. Before switch-off of the analyzer, make sure the monitor indication has changed from shutdown to a state where nothing is displayed.

5 Switch off the operation power switch on the left side face of the rack sampler unit.

6 Turn off the water supply.

■

Power ON procedures (after Extended Power OFF)

Power ON 1 The procedures below correspond to *Power OFF 1*, an extended Power OFF Procedure applied if the instrument will not be in use for 1 to 2 days (for example, a weekend).

The maintenance items listed in this procedure can be programmed as a maintenance pipe.

See *Recommended maintenance pipes* on page C-32.

► To start the system

1 Switch on the water supply of the system.

2 Switch on the operation power switch, located on the left side of the rack sampler unit.

The analyzer starts the initialization routine (time for **c** 501, **e** 601, and control unit approximately 12 min).

3 Switch on each power switch of the computer, printer, and monitor. While the analyzer is performing initialization the **Logon** screen is displayed.

4 Enter your Operator ID logon and password to log on.

5 Choose **OK** to gain access to the software and begin operation. When initialization is completed, the analyzer goes into standby.

6 Perform the maintenance items listed below in the specified order to prepare the System for routine operation.

■

► To prepare the system for routine operation

1 Select **(37) System Air Purge (E Module)** from the **Maintenance** Items list on **Utility** > **Maintenance**. Choose **Select** to display the **System Air Purge (E Module)** window.

2 Select the **Ch1,2** option and enter 5 in the **Cycles** text box and choose **Execute** to perform this maintenance item 5 times.

3 Select **(8) Reagent Prime** from the **Maintenance** Items list on **Utility** > **Maintenance**. Choose **Select** to display the **Reagent Prime** window.

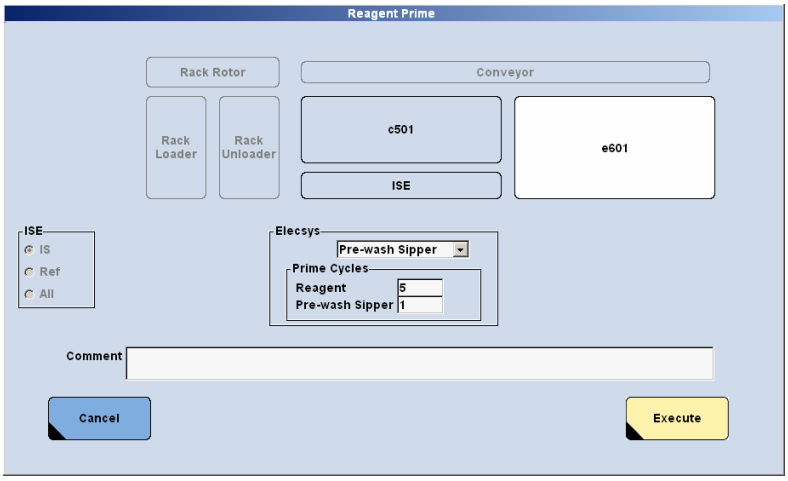

Figure C-66 Reagent Prime window

4 In the **Elecsys** area select **Pre-wash Sipper** from the **e** 601 list box. In the **Prime Cycles** area enter 5 for the **Pre-wash Sipper**

5 Choose **Execute** to start reagent priming.

6 Select **(25) MC Preparation** from the **Maintenance** Items list on **Utility** > **Maintenance**. Choose **Select** to display the **MC Preparation** window.

7 Select the **Ch1,2** option and enter *5* in the **Cycles** text box and choose **Execute** to initiate the MC preparation.

The system is now ready for routine operation.

■

Power ON 2 The procedures below correspond to *Power OFF 2*, an extended Power OFF Procedure applied if the instrument will not be used for 3 to 7 days.

The maintenance items listed in this procedure can be programmed as a maintenance pipe.

See *Recommended maintenance pipes* on page C-32.

► To reload consumables and start the system

1. Return the removed **cobas e** packs to the reagent disk prior to power ON.
2. Dispose of the ProbeWash, ProCell, CleanCell and PreClean bottles filled with deionized water according to local regulations. Place new ProbeWash, ProCell, CleanCell and PreClean bottles.

   See *Reagent reloading (e 601)* on page B-133.
3. Refill magazine lifter and place new ProCell and CleanCell reservoir cups on the instrument.
4. Switch on the water supply of the system.
5. Switch on the operation power switch, located on the left side of the rack sampler unit.

   The analyzer starts the initialization routine. While the analyzer is performing initialization (time for **c** 501, **e** 601, and control unit approximately 12 min), the **Logon** screen is displayed.
6. Enter your Operator ID logon and password to log on.
7. Choose **OK** to gain access to the software and begin operation. When initialization is completed, the analyzer goes into standby.

   Update all system consumables by pressing the corresponding indicator lamps.
8. Perform the maintenance items listed below in the specified order to prepare the System for routine operation.

■

► To prepare the system for routine operation

1 Select **(37) System Air Purge (E Module)** from the **Maintenance** Items list on **Utility** > **Maintenance**. Choose **Select** to display the **System Air Purge** (E Module) window.

2 Select the **Ch1,2** option and enter *5* in the **Cycles** text box and choose **Execute** to perform this maintenance item 5 times.

3 Select **(8) Reagent Prime** from the **Maintenance** Items list on **Utility** > **Maintenance**. Choose **Select** to display the **Reagent Prime** window.

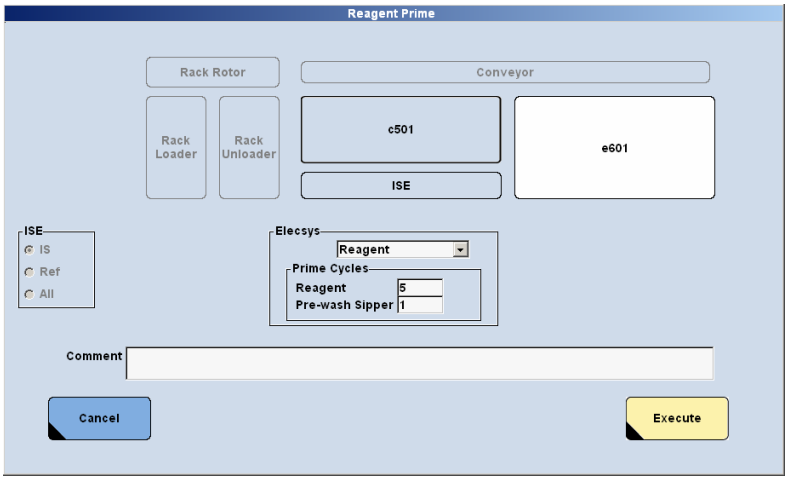

Figure C-67 Reagent Prime window

4 Deselect the **c** 501 module and select the **e** 601 module.

5 In the **Elecsys** area select **Reagent** from the **e** 601 list box. In the **Prime Cycles** area enter *5* for the Reagent.

6 Choose **Execute** to start reagent priming.

7 Select **(25) MC Preparation** from the **Maintenance** Items list on **Utility** > **Maintenance**. Choose **Select** to display the **MC Preparation** window.

8 Select the **Ch1,2** option and enter *30* in the **Cycles** text box to perform MC preparation 30 times on each channel. Choose **Execute** to initiate the MC preparation.

9 Select **(8) Reagent Prime** from the **Maintenance** Items list on **Utility** > **Maintenance**. Choose **Select** to display the **Reagent Prime** window.

10 In the **Elecsys** area select **Pre-wash Sipper** from the **e** 601 list box. In the **Prime Cycles** area enter *5* for the Pre-wash Sipper.

11 Choose **Execute** to start reagent priming.

The system is now ready for routine operation.

■

As needed

Troubleshooting D

19 Data alarms D-3
20 Troubleshooting D-65

Data alarms

This chapter contains the data alarms generated by the **cobas** 6000 system. In addition to a description of the cause of each alarm and remedy, the analytical module of origin and automatic rerun conditions are described here.

In this chapter

Chapter **19**

Introduction D-7
Data alarm list D-10
Data alarms c 501 (ISE) D-12
ADC.E D-12
Calc.? D-13
Cal.E (Sample flag) D-13
ClcT.E D-13
CmpT.? D-14
CmpT.E D-14
Edited D-14
>Index D-15
>I.xxx D-15
ISE.E D-16
ISE.N D-16
<Mix D-17
Mix.E D-17
Over.E D-17
Reag.S D-17
>Rept / <Rept D-18
Samp.S D-18
Samp.C D-18
< >Test D-19
>Test / <Test D-19

Data alarms c 501 (P) D-20
>Abs D-21
ADC.E D-22
Calc.? D-22
ClcT.E D-22
Cal.E D-23
CmpT.? D-23
CmpT.E D-23
>Cuvet D-24
Det.S D-25
Edited D-25
>Index D-25
>I.xxx D-26
>Kin D-26
>Lin D-27
Mix.E D-27
<Mix D-27
Over.E D-28
>Proz D-28
>React D-29
ReagEx D-29
>Rept / <Rept D-29
Samp.? D-30
Samp.C D-30
Samp.O D-30
Samp.S D-31
>Test / <Test D-31
Data alarms e 601 module D-32
>AB D-32
AB.E D-32
ADC.E D-32
Calc.? D-32
Cal.E (Sample flag) D-33
CarOvr D-34
Cell.T D-34
Clot.E D-34
>Curr D-35
Curr.E D-35
Edited D-35
Inc.T D-36
Over.E D-36
ReagEx D-36
Reag.F D-36
Reag.H D-37
Reag.T D-37
Reag.S D-37
>Rept / <Rept D-38

Samp.B D-38
Samp.C D-38
Samp.H D-39
Samp.O D-39
Samp.S D-39
<SigL D-40
SLLD.E D-40
SLLD.N D-40
SysR.S D-41
SysR.T D-41
>Test / <Test D-41
WB.S D-42
WB.T D-42
Data alarms for calibrations D-43
Cal.E D-44
Cond.E D-44
Diff.E D-45
Dup.E D-45
Dupl. D-46
IStd.E D-46
Mono.E D-47
Prep.E D-47
Rsp1.E D-48
Rsp2.E D-48
S1A.E D-48
SD.E D-49
Sens.E D-49
>Sig D-50
<Sig D-50
Sig.E D-50
Slop.E D-51
Std.E D-52
c 501 (ISE) D-52
c 501 (P) D-53
Sys.E D-54
Data alarms for controls D-55
Q3SD D-56
Q2.5SD D-57
R4SD D-57
S2-2Sa D-58
S2-2Sw D-58
S4-1Sa D-58
S4-1Sw D-59
S10Xa D-59
S10Xw D-59

Data problems without alarm D-60
Drift of result data D-60
Erroneous operation D-60
Poor reproducibility D-61
Result data at high level D-61
Result data at low level D-61
Trouble attributed to characteristics of reagent D-62
Trouble for each test D-62
Trouble on each analytical module D-62
Trouble on each channel in same module D-62
Rerun list D-63

Introduction

If any abnormality occurs while the system is switched on, the system notifies the operator of the potential problem by issuing an alarm. These alarms comprise data alarms (referring to irregular measuring results or conditions) and instrument alarms (referring to irregular system conditions). Alarms are classified into five levels:

Alarm levels

Data alarm	This alarm is attached to the results of calibrations or to measurement results of QC or patient samples. If a data alarm occurs at calibration or QC sample measurement and if it will affect subsequent measurements, an instrument alarm of the warning level occurs at the same time. The analyzer does not stop operation.
Warning	This alarm is generated by data alarms or troubles on the instrument. If this alarm occurs during operation, the analyzer does not stop operation. The operator must judge whether to continue or interrupt measurement.
Sampling stop	This alarm concerns troubles on the instrument. For the pipetted sample, measurement is continued.
Stop	This alarm concerns troubles on the instrument. The analyzer stops operation within one cycle (6 seconds). For the sample under measurement, no result data are obtained and the measurement must be repeated.
Emergency stop	This alarm concerns troubles on the instrument. The analyzer immediately stops operation. For the sample under measurement, no result data are obtained and the measurement must be repeated.

Alarm indication

Data alarms are indicated on the **Workplace** > **Data Review** screen, on the **Test Review** window (**Workplace** > **Data Review** > **Test Review**), and on printed reports. If a data alarm occurs, an abbreviation (also referred to as flag) is attached to the measurement result. These flags are strings of three to six characters, which are all explained in this chapter.

Instrument alarms are indicated by the **Alarm** button (global button) on the **System Overview** screen as well as by an audible alarm. If an alarm occurs, the **Alarm** button lights up. Its color indicates the alarm level: Yellow indicates warning level, red indicates sampling stop or emergency stop.

In case of an alarm choose the **Alarm** button to open the **Alarm** window. This window provides an alarm list and descriptions and remedies for each listed alarm.

Data alarm priority

The system displays one data flag for each result in the **Alarm** column. If more than one data flag is associated with a test result, the system displays the alarm depending on the data alarm priority.

The figure below shows the data alarm priority of the **cobas** 6000 analyzer series:

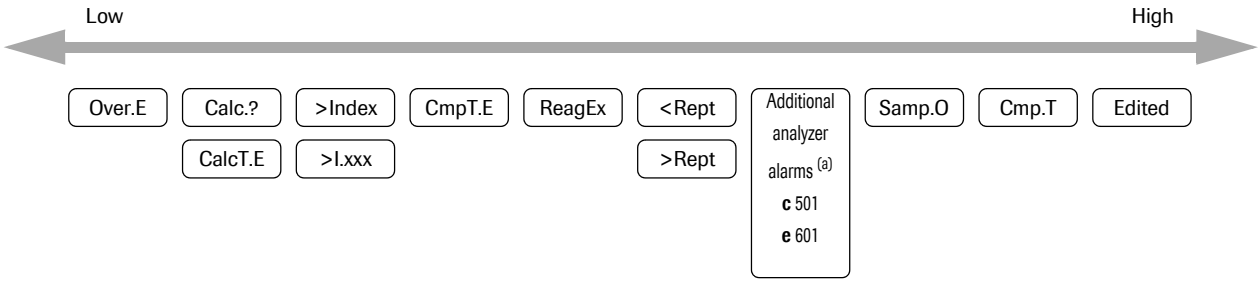

Figure D-1 Data alarm priority of the **cobas** 6000 analyzer series

(a) See data alarm priority of the **c** 501 module and of the **e** 601 module.

The figure below shows the data alarm priority of the **c** 501 module:

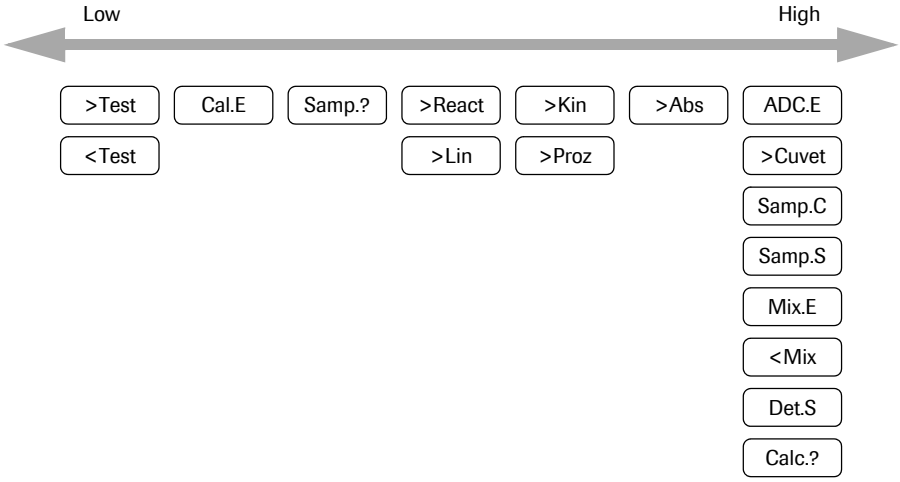

Figure D-2 Data alarm priority of the **c** 501 module

The figure below shows the data alarm priority of the **e** 601 module:

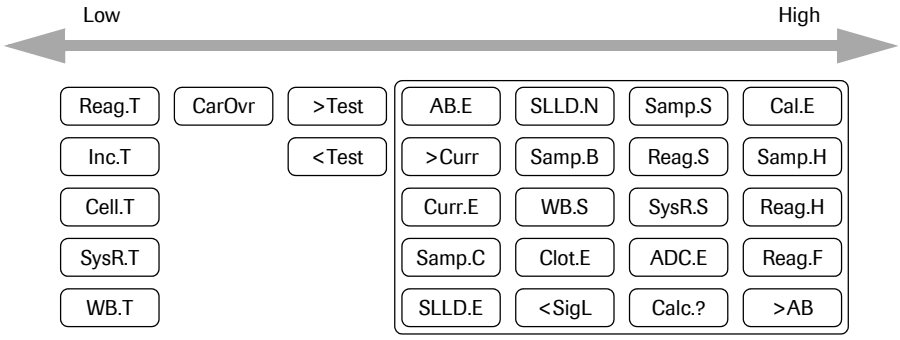

Figure D-3 Data alarm priority of the **e** 601 module

Automatic rerun

If a data alarm occurs on a test for which automatic rerun is selected (check box on **Utility** > **Application** > **Range**), a rerun is automatically requested. For execution of the automatic rerun during measurement, however, automatic rerun needs to be activated on the **Start Conditions** screen as well.

For more information, see *Rerun list* on page D-63.

For QC and patient samples, a data alarm consists of an alarm message and a result message. The result messages are specific to the **cobas** 6000 tests.

Data alarm list

The following table displays the data alarms applicable to ISE tests, **c** 501 tests, **e** 601 tests, and their presentation (flag) on screens and reports.

Flag	Alarm	c 501 (ISE)	c 501 (P)	e 601
>AB	AB level range over (Assay Buffer=ProCell)	–	–	✓
AB.E	AB level check error	–	–	✓
>Abs	ABS over	–	✓	–
ADC.E	ADC abnormal	✓	✓	✓
Cal.E (Sample flag)	Calibration result abnormal (Sample flag)	✓	✓	✓
Calc.?	Calculation not possible	✓	✓	✓
CarOvr	Potential microbeads carryover	–	–	✓
Cell.T	Measuring cell temperature out of range	–	–	✓
ClcT.E	Calculated test error	✓	✓	–
Clot.E	Clot pressure abnormal	–	–	✓
CmpT.?	Unable to calculate compensated test	✓	✓	–
CmpT.E	Data error in compensated test	✓	✓	–
>Curr	Current range over	–	–	✓
Curr.E	Current range check error	–	–	✓
>Cuvet	Cell blank abnormal	–	✓	–
Det.S	Carry over detergent short	–	✓	–
Edited	Edited test	✓	✓	✓
Inc.T	Incubator temperature	–	–	✓
>Index	Serum index check	✓	✓	–
>I.xxx	Serum index check	✓	✓	–
ISE.E	ISE voltage level error	✓	–	–
ISE.N	ISE noise error	✓	–	–
>Kin	Prozone error 2 / Kinetic unstable	–	✓	–
>Lin	Linearity abnormal	–	✓	–
Mix.E	Ultrasonic mixing error	✓	✓	–
<Mix	Mixing power low level	✓	✓	–
Over.E	Overflow	✓	✓	✓
>Proz	Prozone error 1	–	✓	–
>React	Reaction limit over (substrate depletion)	–	✓	–
ReagEx	Reagent expired	–	✓	✓
Reag.F	Reagent film detected	–	–	✓
Reag.H	Reagent hovering	–	–	✓
Reag.S	Reagent short	✓	–	✓
Reag.T	Reagent disk temperature	–	–	✓
>Rept / <Rept	Repeat limit over (upper / lower)	✓	✓	✓

Table D-1 Data alarm list (Sheet 1 of 2)

Flag	Alarm	c 501 (ISE)	c 501 (P)	e 601
Samp.?	ABS maximum over (non-lin curve)	–	✓	–
Samp.B	Sample air bubble	–	–	✓
Samp.C	Sample clot	✓	✓	✓
Samp.H	Sample hovering	–	–	✓
Samp.O	Potential carryover during processing of the rerun measurement	–	✓	✓
Samp.S	Sample short	✓	✓	✓
<SigL	Low signal level	–	–	✓
SLLD.E	Sample LLD abnormal	–	–	✓
SLLD.N	Sample LLD noise	–	–	✓
SysR.S	Auxiliary reagent short	–	–	✓
SysR.T	Auxiliary reagent temperature	–	–	✓
< >Test	Sample range over	✓	–	–
>Test / <Test	Upper/Lower technical Limit	✓	✓	✓
WB.S	Washing buffer short (PreClean)	–	–	✓
WB.T	Washing buffer temperature (PreClean)	–	–	✓

Table D-1 Data alarm list (Sheet 2 of 2)

Data alarms c 501 (ISE)

In this section you find the data alarms of the **c** 501 (ISE) module.

ADC.E

Alarm ADC abnormal

Description The analog/digital converter does not work normally.

Cause Numerical conversion of the electromotive force is abnormal.

Remedy
1. If other instrument alarm exists, correct those alarms and resume operation.
2. Choose **Utility** > **Maintenance** and perform maintenance item (1) Reset. If the alarm recurs call Roche service representative.

Calc.?

Alarm Calculation not possible

Description The denominator becomes zero in calculation.

1. During calculation the denominator became zero.
2. An overflow occurred in logarithmic or exponential calculation.
3. Result was left blank.

Cause Internal calculation error has occurred.

Remedy

1. Check the test that is flagged with an error message in the calculation. Dilute the sample and rerun the sample.
2. Check the calibration type list box on **Utility** > **Application** > **Calib**.
3. Resume operation. If alarm recurs, call Roche service representative.

Cal.E (Sample flag)

Alarm Calibration result abnormal (Sample flag)

Description No calibration data or previous calibration data used.

Cal.E appears on each QC and patient sample for the affected test until the problem is resolved.

Cause No valid calibration stored in the system or the last calibration has failed.

Remedy

1. Correct the condition causing the alarm that occurred during the last calibration attempt.
2. Recalibrate.

ClcT.E

Alarm Calculated test error

Description Calculation error has occurred.

Cause A data alarm has occurred for a test needed in the calculation. This is **not** valid for the following errors and alarms:

- Calculation not possible (Calc.?)

Remedy

1. Correct the data alarm of the test to be used on the calculation.
2. Recalibrate.

CmpT.?

Alarm Unable to calculate compensated test

Description During test-to-test compensation calculation, the denominator became zero. Blank space is left in the report.

Cause
1. The test used for test-to-test compensation has not been measured yet.
2. Any test used for test-to-test compensation has data alarm calculation not possible (Calc.?) or test-to-test compensation error (CmpT.E).
3. Any test used in the compensation formula has a data alarm that leaves the result blank (for example, Samp.S, Reag.S).

Remedy Correct the data alarm of the test to be used for compensation. Rerun the sample.

CmpT.E

Alarm Data error in compensated test

Description
1. In test-to-test compensation calculation, a data alarm other than those shown below is indicated for the compensation test data.
2. Calculation not possible, test-to-test compensation disabled, overflow, random error, systematic error, QC error and outside of expected value.

Cause The test to be used for compensation has a data alarm.

Remedy Correct the data alarm on the test to be used for compensation. Rerun the sample.

Edited

Alarm Edited test

Description An edited first result or replaced rerun result is marked with an *Edited* alarm on the **Data Review** screen. This also prints on the patient report.

Cause The result data has been edited.

Remedy Check the result of measurement.

>Index

Alarm Serum index check

Description The L (lipemic), H (hemolytic), or I (icteric) result is greater than the specified value (**Utility** > **Application** > **Range**).

The serum index check is performed after all test results are generated. If a data alarm is already attached to the result, no serum index check will be performed.

Cause A highly lipemic, hemolytic, or icteric sample has been measured.

Remedy Check the result of measurement.

>I.xxx

Alarm Serum index check

Description The L (lipemic), H (hemolytic), or I (icteric) result is greater than the specified value (**Utility** > **Application** > **Range**).

Possible >I.xxx alarms are:

- >I.L
- >I.H
- >I.I
- >I.LH
- >I.LI
- >I.HI
- >I.LHI

The combination of L, H, I indicates which serum index value is exceeded. For example, the data alarm >I.LH indicates, that the serum index values of L and H are exceeded.

The serum index check is performed after all test results are generated. If a data alarm is already attached to the result, no serum index check will be performed.

Cause A highly lipemic, hemolytic, or icteric sample has been measured.

Remedy Check the result of measurement.

ISE.E

Alarm ISE voltage level error

Description During measurement of internal reference, the EMF was not within the following ranges (ISE IS):

Na^+	-90.0 to -10 mV
K^+	-90.0 to -10 mV
Cl^-	80.0 to 160 mV

Cause
- The reference electrode is deteriorated.
- Insulation is poor due to liquid leakage from the reference electrode mounting section.
- ISE IS is deteriorated.

Remedy
1. Set the reagent and perform maintenance item (8) Reagent Prime for the ISE unit.
2. Replace the electrode and perform maintenance item (8) Reagent Prime for the ISE unit.
3. Make sure that the O-ring is attached to the electrode joint and then perform maintenance item (8) Reagent Prime for the ISE unit.
4. Set the internal standard solution properly and perform maintenance item (8) Reagent Prime for the ISE unit.
5. Check that the electrode cords are correctly connected.

ISE.N

Alarm ISE noise error

Description In ISE measurement, the fluctuation in electromotive force exceeds the following value:

Na^+	0.7 mV
K^+	1.0 mV
Cl^-	0.8 mV

Cause
- Entry of air bubbles for lack of reagent
- Entry of air bubbles due to improper attachment of electrode
- Entry of air bubbles through sipper tube
- Poor insulation of waste solution block
- Poor insulation due to liquid leakage from sipper pipetter

Remedy

1. Check for sufficient reagent volume, make sure the tubing sits correctly in the ISE Ref. bottle, and perform maintenance item (8) Reagent Prime for the ISE unit (All).
2. Make sure that the O-ring is attached to the electrode joint and perform maintenance item (8) Reagent Prime for the ISE unit (All).
3. Replace the sipper tube and perform maintenance item (8) Reagent Prime for the ISE unit (All).
4. Eliminate deposits.
5. Carry out cleaning, checkup, and maintenance of the sipper syringe.

<Mix

Alarm Mixing power low level

For more information, see *<Mix* on page D-27.

Mix.E

Alarm Ultrasonic mixing error

For more information, see *Mix.E* on page D-27.

Over.E

Alarm Overflow

Description Display is not possible because the output figure exceeds 6 digits

Cause The data is obtained in more than six digits including a negative sign and decimal places.

Remedy

1. Minimize the difference in concentration between the sample and calibrator.
2. Obtain the result data with six characters including negative sign and decimal places.

Reag.S

Alarm Reagent short

Description There is insufficient ISE reagent volume when alarm is associated with sodium, potassium and chloride values.

Cause There is not enough reagent in the reagent bottle.

Remedy

1. Verify adequate reagent volumes. Replace low reagent, as necessary. Prime new reagent and recalibrate.
2. If adequate reagent volumes are present, verify volumes on the **Reagent** screen. Rerun the sample.
3. Resume operation. If alarm recurs, call Roche service representative.

>Rept / <Rept

Alarm Repeat limit over (upper / lower)

Description The result falls outside the repeat limit range programmed on **Utility** > **Application** > **Range**.

Cause The sample concentration is higher or lower (>Rept / <Rept) than the set value.

Remedy This alarm can be activated on **Utility** > **System** (**Page 1/4**) > **Alarm**. If activated, the system can also be programmed to automatically repeat this test with normal sample volume.

Samp.S

Alarm Sample short

Description The liquid level cannot be detected in the sample container.

Cause The sample volume is insufficient in the sample container.

Remedy
1. Add sample and rerun.
2. Resume operation. If alarm recurs, call Roche service representative.

Samp.C

Alarm Sample clot

Description The specified volume of sample is not aspirated.

Cause A clot is detected.

Remedy
1. Perform maintenance item (12) Sample Probe Wash.
2. Check if there are clots in the sample.
3. If necessary remove the clots from the sample and rerun.
4. If alarm recurs, call Roche service representative.

< >Test

Alarm Sample range over

Description If the data is out of the following ranges, Sample range over is issued:

Na^+	10-250 mmol/L
K^+	1-100 mmol/L
Cl^-	10-250 mmol/L

Cause
- The electrode is deteriorated.
- The flow path is contaminated.
- Sample concentration is too high or too low.

Remedy
1. Are controls in range?

   If Yes, go to 2.

   If No, go to 3.
2. Continue with routine analysis. Continue with step 3 at the end of the day.
3. Replace the appropriate cartridge.

   Replacing ISE cartridges must only be done by specially trained operators.

   For more information, refer to the separate maintenance manual *Interlock function cobas* **c** 501 *with ISE.*
4. Resume operation.

   If alarm recurs, call Roche service representative.

>Test / <Test

Alarm Upper/Lower technical Limit

Description The sample concentration is outside the technical range entered on **Utility** > **Application** > **Range**.
- Over the technical limit: Value is greater than the upper limit (>Test).
- Under the technical limit: Value is less than the lower limit (<Test).

Cause Sample concentration is too high or too low.

Remedy
1. Manually dilute and rerun the diluted sample until the measured concentration is within the specified range. Be sure to calculate the original concentration from the measured value, using the correct dilution factor.

   In case of urine samples with a >Test alarm, a manual rerun can be performed with decreased volume (6.5 µL instead of normal volume).
2. Perform maintenance item (12) Sample Probe Wash.
3. Clean the outside of the sample probe manually.

   If alarm recurs, call Roche service representative.

Data alarms c 501 (P)

In this section you find the data alarms of the **c** 501 (P) module.

>Abs

Alarm ABS over

Description The absorbance value to be used for calculation after cell blank correction exceeded 33000.

Cause
- The sample concentration is too high or the sample is lipemic.
- The reagent has not been stored or handled properly.
- Obstructions are in the optical path of the photometer.

Remedy
- If only one sample is affected: Check whether the sample is grossly lipemic or has an extremely high value. Follow your laboratory protocol for this situation.
- If only one application is affected: Check reagent storage and handling for that test.
- If all samples are affected:
  - Remove any obstructions in the optical path of the photometer. Make sure the lamp is on.
  - Choose **Utility** > **Maintenance** and perform maintenance item (5) Incubation Water Exchange
  - Clean the incubator bath if it is contaminated.
    For further instructions, see:
    Replacing reaction cells on page C-90
    Cleaning the incubator bath on page C-92
  - Choose **Utility** > **Maintenance** and perform maintenance item (3) Photometer Check.
  - Check the Photometer Check results on the printout (Abs < 14000).
  - Replace the photometer lamp, if necessary.
  - Resume operation. If alarm recurs, call Roche service representative.
- If all samples are affected intermittently:
  - If any reaction cell is scratched, replace the cell.
    For further instructions, see:
    Replacing reaction cells on page C-90
    Cleaning the incubator bath on page C-92

ADC.E

Alarm ADC abnormal

Description The analog-digital converter does not work normally.

Cause
1. Numerical conversion is abnormal.
2. The cell count is abnormal.

Remedy
1. If other instrument alarms exist, correct those alarms and resume operation.
2. Choose **Utility** > **Maintenance** and perform maintenance item (1) Reset.
3. If the alarm recurs, remove the reaction disk and check for water droplets or dust on sensors. Clean if necessary.
4. If the alarm recurs call Roche service representative.

Calc.?

Alarm Calculation not possible

Description The denominator becomes zero in calculation.
- During calculation the denominator became zero.
- An overflow occurred in logarithmic or exponential calculation.
- Result was left blank.

Cause Internal calculation error has occurred.

Remedy
1. Check the test that is flagged with an error message in the calculation.
2. Rerun with a suitable dilution ratio (**Workplace** > **Test Selection** > **S.Vol./D.Ratio**).
3. Check the calibration type list box on **Utility** > **Application** > **Calib**.
4. Resume operation. If alarm recurs, call Roche service representative.

ClcT.E

Alarm Calculated test error

Description Calculation error has occurred.

Cause A data alarm has occurred for the test needed in the calculation. This is not valid for the following data alarms:
- Calculation not possible (Calc.?)
- Reagent expired date (ReagEx)

Remedy
1. Correct the data alarm of the test to be used on the calculation.
2. Recalibrate.

Cal.E

Alarm Calibration result abnormal (Sample flag)

Description No calibration data or previous calibration data used in case of a failed calibration.

Cal.E appears on each QC and patient sample for the affected test until the problem is resolved.

Cause No valid calibration stored in the system or the attempted calibration has failed.

Remedy
1. Correct the condition causing the alarm that occurred during the failed calibration.
2. Recalibrate.

CmpT.?

Alarm Unable to calculate compensated test

Description During test-to-test compensation calculation, the denominator became zero. Blank space is left in the report.

Cause
1. The test used for test-to-test compensation has not been measured yet.
2. Any test used for test-to-test compensation has data alarm calculation not possible (Calc.?) or test-to-test compensation error (CmpT.E).
3. Any test used in the compensation formula has a data alarm that leaves the result blank (for example, Samp.S, Reag.S).

Remedy Correct the data alarm of the test to be used for compensation. Rerun the sample.

CmpT.E

Alarm Compensation Error Between Tests

Description
1. In test-to-test compensation calculation, a data alarm for the compensation test data is indicated.
2. Calculation not possible, test-to-test compensation disabled, overflow, random error, systematic error, QC error and outside of expected value.

Cause The test to be used for compensation has a data alarm.

Remedy Correct the data alarm on the test to be used for compensation. Rerun the sample.

>Cuvet

Alarm Cell blank abnormal

Description For a diluted test the cell blank value of the second reaction cell exceeds the reference by more than 0.1 Abs. The reference is the stored value from the **(4) Cell Blank Measurement**.

If a reaction cell fails the cell blank measurement, the system excludes it from any measurements.

For diluted tests however, the system uses two reaction cells:

- 1st cell: Contains sample and diluent.
- 2nd cell: Used for discharging diluted sample from the 1st cell, adding reagent, and performing measurement.

The >*Cuvet* alarm indicates a failed cell blank measurement for the 2nd cell.

For more information about cell blank measurement, see:
Cell rinse unit on page A-84
Main steps of photometric analysis on page A-87
To perform a cell blank measurement on page C-82
To view the cell blank measurement results on page C-83

Cause Reaction cells are contaminated or damaged.

Remedy

1. Check that the reaction cell is not contaminated or cracked.
2. Choose **Utility** > **Maintenance** and perform maintenance item **(7) Wash Reaction Parts**.
3. Ensure that there is no excessive foaming or particles in the incubator bath.

   If you notice excessive foaming or particles, perform maintenance item **(5) Incubation Water Exchange**.
4. Wipe the outside of the reaction cells with a gauze pad moistened with incubator bath water.
5. Resume operation. If alarm recurs, ensure there is adequate rinse water and cell blank water from the rinse mechanism. The cells must be completely filled.
6. Choose **Utility** > **Maintenance** and perform maintenance item **(5) Incubation Water Exchange**.
7. Resume operation. If alarm recurs, choose **Utility** > **Maintenance** and perform maintenance item **(4) Cell Blank Measurement**.

   If an **Abnormal Cell List** is displayed on the **Cell Blank Measurement** report, the cell blank failed. For the cells listed in the **Abnormal Cell List**, the cell blank value differs more than ± 1000 (± 0.1 Abs) compared to cell no. 1. These cells need to be inspected (or replaced) and the **(4) Cell Blank Measurement** must be performed again.

   For further instructions, see:
   To perform a cell blank measurement on page C-82
   Replacing reaction cells on page C-90
8. Resume operation. If alarm recurs, call Roche service representative.

Det.S

Alarm Carry over detergent short

Description If a special wash for the reagent probe is defined, the reagent probe immerses into the specified detergent cassette. This alarm occurs, if the test is carried out even though the detergent volume is insufficient.

Cause The residual volume of the special wash detergent is insufficient.

Remedy
1. Load a new detergent cassette.
2. Check the results of the measurement and rerun the sample if necessary.

Edited

Alarm Edited test

Description An edited first result or replaced rerun result is marked with an *Edited* alarm on the **Data Review** screen. This also prints on the patient report.

Cause The result data has been edited.

Remedy Check the result of measurement.

>Index

Alarm Serum index check

Description The L (lipemic), H (hemolytic), or I (icteric) result is greater than the specified value (**Utility** > **Application** > **Range**).

The serum index check is performed after all test results are generated. If a data alarm is already attached to the result, no serum index check will be performed.

Cause A highly lipemic, hemolytic, or icteric sample has been measured.

Remedy Check the result of measurement.

>I.xxx

Alarm Serum index check

Description The L (lipemic), H (hemolytic), or I (icteric) result is greater than the specified value (**Utility** > **Application** > **Range**).

Possible >I.xxx alarms are:

- >I.L
- >I.H
- >I.I
- >I.LH
- >I.LI
- >I.HI
- >I.LHI

The combination of L, H, I indicates which serum index value is exceeded. For example, the data alarm >I.LH indicates, that the serum index values of L and H are exceeded.

The serum index check is performed after all test results are generated. If a data alarm is already attached to the result, no serum index check will be performed.

Cause A highly lipemic, hemolytic, or icteric sample has been measured.

Remedy Check the result of measurement.

>Kin

Alarm Prozone error 2 / Kinetic unstable

Description The prozone check value exceeds the specified limit value. (Reaction rate method)

Cause
- The sample concentration is too high. The monotone kinetic check value exceeds the specified limit for other tests.
- The limit value is not set properly.

Remedy
1. Rerun with **Decrease** sample concentration or a suitable dilution ratio (**Workplace** > **Test Selection** > **S.Vol./D.Ratio**).
2. To avoid check, set [0] [0] [0] [0] [0] [Inside] [0] [0] for Prozone Limit (on **Utility** > **Application** > **Analyze**).

>Lin

Alarm Linearity abnormal

Description In rate assay, the reaction linearity exceeds the specified limit value.

Cause
- The photometer lamp is deteriorated.
- The linearity check value is not set properly.
- The sample is extremely lipemic.
- The ultrasonic mixers are defective.
- Debris are in the incubator bath.

Remedy
1. Check the photometer lamp.
2. Rerun with a suitable dilution ratio (**Workplace** > **Test Selection** > **S.Vol./D.Ratio**).
3. Choose **Utility** > **Application** > **Analyze** to check the Linearity Limit.
4. Choose **Utility** > **Maintenance** > **Check** (on **Maintenance Type** list) and perform maintenance check (7) Cuvette Mixing to check the ultrasonic mixing mechanisms.
5. Ensure the incubator bath is free of debris. Clean the incubator bath, if necessary.
   See *Cleaning the incubator bath* on page C-92.
6. Resume operation. If alarm recurs, call Roche service representative.

Mix.E

Alarm Ultrasonic mixing error

Description There is no ultrasonic output for mixing.

Cause
- The water level in the incubator bath is too low.
- The water level sensor of the incubator bath is abnormal.

Remedy Supply water to the incubator bath.

<Mix

Alarm Mixing power low level

Description The ultrasonic monitor value is lower than the reference value.

Cause The ultrasonic mixer is deteriorated.

Remedy
1. Clean the surface of the ultrasonic mixers.
   See *Cleaning the ultrasonic mixers* on page C-102.
2. Call Roche service representative.

Over.E

Alarm Overflow

Description Display is not possible because the output figure exceeds 6 digits

Cause
- The K factor has more than six digits due to the use of a wrong calibrator decimal place.
- The data is obtained in more than six digits including a negative sign and decimal places.

Remedy
- Reduce the number of decimal places used for the calibrator 1.
- Obtain the result data with six characters including negative sign and decimal places.

>Proz

Alarm Prozone error 1

Description The prozone check value exceeds the specified limit value. (Antigen readdition method)

Cause
- The sample concentration is too high for immunological test.
- The limit value is not set properly.

Remedy
1. Check the reagent preparation.
2. Rerun with **Decrease** sample concentration or a suitable dilution ratio (**Workplace** > **Test Selection** > **S.Vol./D.Ratio**).
3. Choose **Utility** > **Application** > **Analyze** to check the upper prozone limit.
4. Resume operation. If the alarm recurs, call Roche service representative.

>React

Alarm Reaction limit over (substrate depletion)

Description In a rate assay, the rate of change in main wavelength absorbance exceeds the specified limit value.

Cause
- The sample concentration is too high.
- The reagent has been prepared improperly or deteriorated.
- On **Utility** > **Application** > **Analyze** there is an improper setting in the **Increase/Decrease** box in the **Abs. Limit** line.

Remedy
1. Verify the setting in the **Increase/Decrease** box on **Utility** > **Application** > **Analyze**.
2. Rerun with **Decrease** sample concentration or a suitable dilution ratio (**Workplace** > **Test Selection** > **S.Vol./D.Ratio**).
3. Prepare the reagent newly.

ReagEx

Alarm Reagent expired

Description The alarm indicates that an expired reagent was used; the test result is not guaranteed. The alarm can be inactivated under **Utility** > **System** > **Alarm**.

Cause The system detected an expired reagent on board the analyzer.

Remedy
1. Check the **Reagent Overview** screen for expired reagents.
   For more information, see *Reagent Overview button* on page B-146.
2. Exchange expired reagents.

>Rept / <Rept

Alarm Repeat limit over (upper / lower)

Description The result falls outside the repeat limit range programmed on **Utility** > **Application** > **Range**.

Cause The sample concentration is higher (>Rept) or lower (<Rept) than the set value.

Remedy This alarm can be activated on **Utility** > **System** (**Page 1/4**) > **Alarm**. If activated, the system can also be programmed to automatically repeat this test with normal sample volume.

Samp.?

Alarm ABS maximum over (non-lin curve)

Description The absorbance of a sample is found equal or greater than the theoretical maximum absorbance (for infinite analyte concentration). The result field will be left blank on the report and **Data Review** screen. This blank result is transmitted, together with the alarm code “46” to the Host.

Cause The sample concentration is too high.

Remedy Dilute the sample, if required, and rerun. If automatic rerun is programmed, the determination will be rerun with a decreased sample concentration.

Samp.C

Alarm Sample clot

Description The specified volume of sample is not aspirated.

For more information, see *Samp.C* on page D-18.

Samp.O

Alarm Potential carryover during processing of the rerun measurement

Description If a sample probe wash is defined for a photometric test and this test is requested for a sample that has been already measured, the Samp.O flag is attached to the test result.

For information about defining a sample probe wash for photometric tests, see *Sample probe wash* on page B-306.

Cause Required measurement condition does not correspond to sample probe wash configuration for this test.

Remedy Repeat measurement with a new sample aliquot.

Samp.S

Alarm Sample short

Description The liquid level cannot be detected in the sample container.

For more information, see *Samp.S* on page D-18.

>Test / <Test

Alarm Upper/Lower technical Limit

Description The sample concentration is outside the technical range entered on **Utility** > **Application** > **Range**.

- Over the technical limit: Value is greater than the upper limit (>Test).
- Under the technical limit: Value is less than the lower limit (<Test).

Cause Sample concentration is too high or too low.

Remedy

1. Manually dilute and rerun the diluted sample until the measured concentration is within the specified range. Be sure to calculate the original concentration from the measured value, using the correct dilution factor.
2. Perform maintenance item (12) Sample Probe Wash.
3. Clean the outside of the sample probe manually.

   If alarm recurs, call Roche service representative.

Data alarms e 601 module

In this section you find the data alarms of the **e** 601 module.

>AB

Alarm AB level range over (Assay Buffer=ProCell)

Description During run preparation, the ProCell signal level is out of range.

Cause ProCell is evaporated or may be contaminated.

Remedy Check for air bubbles in the ProCell reservoir. Replace with a new ProCell bottle.

AB.E

Alarm AB level check error

Description The ProCell level check failed.

Cause ProCell liquid level check failed. The ProCell Volume is inadequate for run preparation.

Remedy Replace the low volume bottle with a new bottle.

ADC.E

Alarm ADC abnormal

Description The analog-digital converter does not work normally.

Cause
- Numerical conversion is abnormal.
- The cell count is abnormal.

Remedy
1. If other instrument alarms exist, correct those alarms and resume operation.
2. Choose **Utility** > **Maintenance** and perform maintenance item (1) Reset.
3. If the alarm recurs, remove the reaction disk and check for water droplets or dust on sensors. Clean if necessary.
4. If the alarm recurs call Roche service representative.

Calc.?

Alarm Calculation not possible

Description The denominator becomes zero in calculation.

Cause Internal calculation error occurred.

Remedy Rerun the sample.

Cal.E (Sample flag)

Alarm Calibration result abnormal (Sample flag)

Description No calibration data or previous calibration data used.

Cal.E appears on each QC and patient sample for the affected test until the problem is resolved.

Cause
- There is no valid calibration stored in the system.
- The attempted calibration has failed.

Remedy
1. Correct the condition causing the alarm that occurred during the latest calibration.
2. Repeat the calibration.
3. Replace with new calibrators and a **cobas e** pack. Repeat the calibration.

CarOvr

Alarm Potential microbeads carryover

Description The signal level of this sample is low.

Cause Microbeads carryover from the previous sample may have occurred.

Remedy Rerun the sample.

Exception: Do not rerun the sample if either qualitative assays are negative or quantitative assays are below the lower limit of the clinical decision.

Cell.T

Alarm Measuring cell temperature out of range

Description Measuring cell temperature is out of range. The system performs an initial check 30 minutes after start-up. The temperature is checked continuously thereafter.

Cause
- The reagent disk cover is open. Radiation of heat does not work normally.
- The room temperature is out of range.

Remedy
1. Verify the temperature of ProCell/CleanCell. Check the fans at the rear part of the module are operating normally and are free of obstructions.
2. Check that room temperature is between 18°C and 32°C (64.4°F and 89.6°F).

Clot.E

Alarm Clot pressure abnormal

Description In checking of the pressure sensor, overflow data is detected.

Cause There are air bubbles in the water flow tube.

Remedy Choose **Utility** > **Maintenance** and perform maintenance item (23) Pipetter Air Purge (10 cycles).

Resume measurement. If the alarm recurs, contact the Roche service representative.

>Curr

Alarm Current range over

Description The measuring cell current is out of range when checked during run preparation.

Cause Abnormal measuring cell condition.

- There are air bubbles in the ProCell reservoir.
- The electrode of the measuring cell is contaminated or deteriorated.

Remedy

1. Check for air bubbles in the ProCell reservoir. Replace with a new ProCell bottle.
2. Choose **Utility** > **Maintenance** and perform maintenance item (27) Liquid Flow Cleaning.

During operation:

1. Choose **Utility** > **Maintenance** and perform maintenance item (25) MC Preparation (10 cycles).
2. Rerun the sample. If alarm recurs immediately, call Roche service representative.

Curr.E

Alarm Current range check error

Description The measuring cell current check failed.

Cause ProCell liquid level check failed. The ProCell Volume is inadequate for run preparation.

Remedy Replace the low volume bottle with a new bottle.

Edited

Alarm Edited test

Description An edited first result or replaced rerun result is marked with an *Edited* alarm on the **Data Review** screen. This also prints on the patient report.

Cause The result data has been edited.

Remedy Check the result of measurement.

Inc.T

Alarm Incubator temperature

Description Incubator temperature is out of range. The system performs an initial check 30 minutes after start-up. The temperature is checked continuously thereafter.

Cause
- Radiation of heat does not work normally.
- The room temperature is out of range

Remedy
1. Check the fans at the back of the module are operating normally and are free of obstructions.
2. Check that room temperature is between 18°C and 32°C (64.4°F and 89.6°F).

Over.E

Alarm Overflow

Description Display is not possible because the output figure exceeds 7 digits

Cause The display of the data result is not possible due to more than 7 digits.

Remedy
- Check the decimal places of the target value of the calibrator 1.
- Repeat the calibration.

ReagEx

Alarm Reagent expired

Description The alarm indicates that an expired reagent was used; the test result is not guaranteed. The alarm can be inactivated under **Utility** > **System** > **Alarm**.

Cause The system detected an expired reagent on board the analyzer.

Remedy
1. Expired reagents are listed on the reagent unload list with the ReagEx alarm.
2. Exchange expired reagents.

Reag.F

Alarm Reagent film detected

Description The reagent probe detects a film or air bubbles on the reagent.

Cause There are bubbles in the reagent bottle.

Remedy Remove bubbles with an applicator stick.

Reag.H

Alarm Reagent hovering

Description The reagent probe hovers over the reagent disk.

Cause A premature LLD signal is detected during reagent pipetting.

Remedy
1. Dry the lids on the affected **cobas e** pack. Check for bubbles in the affected **cobas e** pack.
2. Choose **Utility** > **Maintenance** and perform maintenance item (1) Reset.

Reag.T

Alarm Reagent disk temperature

Description Reagent disk temperature is out of range. The system performs an initial check 30 minutes after start-up. The temperature is checked continuously thereafter.

Cause
- Radiation of heat does not work normally.
- The room temperature is out of range.

Remedy
1. Verify that the reagent disk cover is securely in place.
2. Check the fans at the back of the module are operating normally and are free of obstructions.
3. Check that room temperature is between 18°C and 32°C (64.4°F and 89.6°F).

Reag.S

Alarm Reagent short

Description The liquid level cannot be detected in the **cobas e** pack.

Cause
- There is no reagent in the **cobas e** pack.
- The lead wire for the liquid level sensor is disconnected.

Remedy
1. Replace with a new **cobas e** pack.
2. Connect the lead wire.

>Rept / <Rept

Alarm Repeat limit over (upper / lower)

Description The result is larger than the specified upper limit value (>Rept) or smaller than the lower limit value (<Rept).

Cause
- The sample concentration is higher than the set value (>Rept).
- The sample concentration is lower than the set value (<Rept).
- An improper repeat limit range is specified.

Remedy
1. Rerun the sample and check the measured value. Or rerun the sample with its dilution.
2. Rerun the sample and check the measured value.
3. Specify a proper range for Repeat Limit (test parameter).

Samp.B

Alarm Sample air bubble

Description
- The sample probe detects air bubbles on the sample.
- Air bubble is detected in the sample syringe flow path when the sample is aspirated.

While pipetting samples, the **e** 601 module checks if there are bubbles on the surface of the sample liquid. This check, however, is performed only if the pipetting volume is more than 15 µL.

Cause
- There are bubbles in the sample container.
- There are air bubbles in the water flow tube.

Remedy
1. Remove bubbles from sample tube with an applicator stick.
2. Choose **Utility** > **Maintenance** and perform maintenance item (23) Pipetter Air Purge (10 cycles).

Samp.C

Alarm Sample clot

Description A sample clot is detected during aspiration.

Cause
- The sample volume is insufficient.
- There are clots in the sample.

Remedy
1. Fill the required volume in the sample container.
2. Check sample for fibrin. Remove any clots.

Samp.H

Alarm Sample hovering

Description The sample probe hovers over the sample.

Cause A premature LLD signal is detected during sample pipetting.

Remedy
1. Check for bubbles in the sample.
2. Choose **Utility** > **Maintenance** and perform maintenance item (1) Reset.

Samp.O

Alarm Potential carryover during processing of the rerun measurement

Description If a sample probe wash is defined for an e 601 test and this test is requested for a sample that has been already measured, the Samp.O flag is attached to the test result.

For information about defining a sample probe wash for photometric tests, see *Sample probe wash* on page B-309.

Cause Required measurement condition does not correspond to sample probe wash configuration for this test.

Remedy Repeat measurement with a new sample aliquot.

Samp.S

Alarm Sample short

Description The liquid level cannot be detected in the sample container.

Cause The sample volume is insufficient in the sample container.

Remedy
1. Add sample and rerun.
2. Resume operation.
3. If alarm recurs, call Roche service representative.

<SigL

Alarm Low signal level

Description The signal level is extraordinarily low.

Cause
- The volume of the reaction mixture in the AssayCup is insufficient
- Reaction mixture contain clots

Remedy Rerun the sample

Cause Extremely high sample concentration for a competitive assay

Remedy Rerun manually diluted sample.

Cause Abnormal MC condition of detection unit (sipper/tubing/MC)

Remedy If alarm recurs, call Roche service representative.

SLLD.E

Alarm Sample LLD abnormal

Description The sample probe does not start LLD or LLD is not completed.

Cause
1. The tip of the sample probe is dirty.
2. The tip of the sample probe is wet.

Remedy
1. Clean the tip of the sample probe and resume measurement. If the alarm recurs, call Roche service representative.
2. Dry the tip of the sample probe and resume measurement. If the alarm recurs, call Roche service representative.

SLLD.N

Alarm Sample LLD noise

Description The sample probe detects air bubbles on the sample.

Cause
1. The sample volume is insufficient.
2. There are bubbles in the sample container.

Remedy
1. Check sample volume.
2. Remove the bubbles with an applicator stick.

SysR.S

Alarm Auxiliary reagent short

Description The counted remaining number becomes 0, liquid short signal is detected, or the liquid level cannot be detected in the ProCell reservoir.

Cause There is no reagent in the reagent bottle.

Remedy Replace with new ProCell/CleanCell bottles.

SysR.T

Alarm Auxiliary reagent temperature

Description ProCell/CleanCell temperature is out of range. The system performs an initial check 30 minutes after start-up. The temperature is checked continuously thereafter.

Cause
1. Radiation of heat does not work normally.
2. The room temperature is out of range.

Remedy
1. Check the fans at the rear part of the module are operating normally and are free of obstructions.
2. Check that room temperature is between 18°C and 32°C (64.4°F and 89.6°F).

>Test / <Test

Alarm Upper/Lower technical Limit

Description
- Upper technical limit exceeded:

  The measured value is higher than the measuring range (>Test) coded in the **cobas e** pack barcode.
- Lower technical limit exceeded:

  The measured value is lower than the measuring range (<Test) coded in the **cobas e** pack barcode.

Cause
- The sample concentration is above the upper limit of the measuring (reportable) range (>Test).
- The sample concentration is below the lower limit of the measuring (reportable) range (<Test).

Remedy
1. If >Test, rerun using the recommended dilution and check the measured value.
2. If <Test, report the result as less than the lower detection limit of the assay. Rerun is not requested.

WB.S

Alarm Washing buffer short (PreClean)

Description The remaining volume for PreClean is 0, or liquid short signal is detected.

Cause There is no reagent in the reagent bottle.

Remedy Replace with a new PreClean bottle.

WB.T

Alarm Washing buffer temperature (PreClean)

Description PreClean temperature is out of range. The system performs an initial check 30 minutes after start-up. The temperature is checked continuously thereafter.

Cause
1. Radiation of heat does not work normally.
2. The room temperature is out of range.

Remedy
1. Check the fans at the rear part of the module are operating normally and are free of obstructions.
2. Check that room temperature is between 18°C and 32°C (64.4°F and 89.6°F).

Data alarms for calibrations

The following table displays all calibration data alarms applicable to ISE tests, **c** 501 tests, **e** 601 tests, and their presentation (flag) on screens and reports.

Flag	Alarm	c 501(ISE)	c 501(P)	e 601
Cal.E	CALIB error (Calib flag – c 501 (ISE))	✓	–	–
Cond.E	Conditioning (ISE) abnormal	✓	–	–
Diff.E	Minimum acceptable difference	–	–	✓
Dup.E	Duplicate error (c 501)	–	✓	–
Dupl.	Duplicate error (e 601)	–	–	✓
IStd.E	Internal standard concentration abnormal	✓	–	–
Mono.E	Monotony of curve	–	–	✓
Prep.E	Preparation abnormal	✓	–	–
Rsp1.E	Response (ISE) abnormal 1	✓	–	–
Rsp2.E	Response (ISE) abnormal 2	✓	–	–
S1A.E	S1ABS abnormal	–	✓	–
SD.E	SD limit error	–	✓	–
Sens.E	Sensitivity error	–	✓	–
>Sig	Maximum signal	–	–	✓
<Sig	Minimum signal	–	–	✓
Sig.E	Minimum/Maximum signal	–	–	✓
Slop.E	ISE slope abnormal	✓	–	–
Std.E	Standard error	✓	✓	–
Sys.E	System error	–	–	✓

Table D-2 Data alarm list

Cal.E

Alarm CALIB error (Calib flag – **c** 501 (ISE))

Displayed in **Calibration** > **Status** > **Calibration Trace**.

Description The current calibrator concentration value or slope value differs from the previous one by more than the specified **Compensated Limit**. The **Compensated Limit** is a limit for the difference | previous value – current value | expressed as percentage of the average (previous value + current value)/2.

The Cal.E alarm is a warning only, not necessarily indicative of a problem with the calibration. Check the test's control recovery before accepting the new calibration result.

Cause
- The standard solution or reagent is not placed in proper position.
- The reagent has deteriorated or the standard solution has become concentrated due to evaporation.

Remedy
- Correct any other instrument and/or data alarms.
- Check standards, reagents, and controls. If controls are in range, and standards and reagents are acceptable, resume operation. Otherwise, correct abnormalities and recalibrate.
- Check Compensated Limit on **Utility** > **Application** > **Calib**.

Cond.E

Alarm Conditioning (ISE) abnormal

Description The slope value is 68.1 mV or greater for Na^+ or K^+ electrodes, or it is -68.1 mV or less for the Cl^- electrode. The conditioning is inadequate.

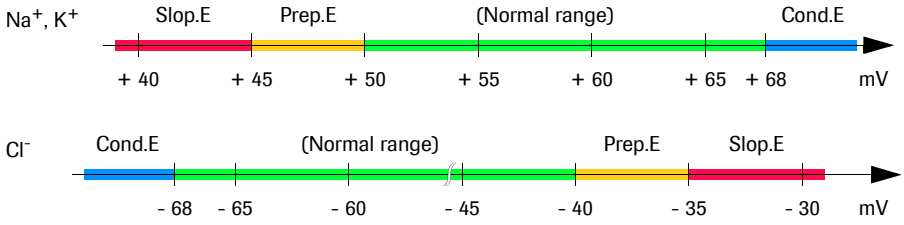

Figure D-4 ISE data alarms and corresponding slope values (EMF values)

Cause
- Conditioning of a new electrode is unsatisfactory.
- The concentration of standard solution LOW/HIGH is improper.

Remedy
1. Run 10 dummy samples of human serum.
2. Pour fresh calibrator ISE Low [Std (1)], ISE High [Std (2)], and ISE High [Std (3)], place on calibration rack and recalibrate the ISEs.
3. Resume operation. If alarm recurs, call Roche service representative.

Diff.E

Alarm Minimum acceptable difference

Description The difference of the signals between each level of calibrators is below the permissible value.

Cause
- The ProCell or calibrator is expired.
- The calibrator does not reach room temperature.

Remedy
1. Replace ProCell.
2. Set the calibrator appropriately.

Dup.E

Alarm Duplicate error (**c** 501)

Displayed in **Calibration** > **Status** > **Calibration Trace**.

Description The difference between the first and second measurement (absorbance) of a calibrator is outside the specified range.

The following steps describe how a decision is made to flag a calibration for violating the duplicate limit.

1. The absorbance for a calibrator (N) is measured twice.
2. The % of error and absorbance error are computed.
3. Is the absorbance error < Duplicate Limit Abs. that appears on **Utility** > **Application**?

   If no, go to step 5.

   If yes, go to step 4.
4. Continue with result calculations. No Dup.E alarm is issued.
5. Is the % error < the % Duplicate Limit?

   If no, go to step 6.

   If yes, go to step 4.
6. Dup.E alarm is issued for this result.

Cause The difference between the first and second measurement (absorbance) of a calibrator is greater than Duplicate Limit Abs and greater than the % Duplicate Error.

Remedy
1. Recalibrate.
2. Check reagent storage, handling and expiration date. Replace the reagent if necessary and recalibrate.
3. If alarm recurs, call Roche service representative.

If this alarm occurs, a Std.E alarm is issued. The Std.E alarm prevents updating of calibration for the affected test.

Dupl.

Alarm Duplicate error (**e** 601)

Displayed in **Calibration** > **Status** > **Calibration Result**.

Description The difference between the first and second measured signal of the calibrator is out of the range specified in the assay.

Cause
- Air was aspirated during the first determination due to air bubbles on the corresponding calibrator. During the second determination no air was aspirated.
- Consequence: The signal values of the first and second determination differ more than the specified percentage.

Remedy
1. Verify that there are not air bubbles on the surface of the calibrator and perform a new calibration.

IStd.E

Alarm Internal standard concentration abnormal

Displayed on **Calibration** > **Status** > **Calibration Trace**

Description The concentration of the internal standard solution (ISE IS) was not within the following ranges:

Na^+	120.0-160.0 mmol/L
K^+	3.0-7.0 mmol/L
Cl^-	80.0-120.0 mmol/L

Cause
- The flow path is contaminated.
- The reagent has deteriorated.

Remedy
1. If the EMF of ISE IS is abnormal on the calibration report, check the ISE IS reagent volume. If necessary, perform a reagent prime and recalibrate.
2. If the EMF of ISE IS is normal on the calibration report, check ISE reagent syringe. The EMF of ISE IS lies ideally midway between the low and the high standard. The ideal ISE IS concentrations values are: Na^+: 140 mmol/L; K^+: 5 mmol/L; Cl^-: 100 mmol/L.
3. Resume operation. If alarm recurs, call Roche service representative.
4. Perform maintenance item (8) Reagent Prime for the ISE unit to wash the flow path.
5. Replace the internal standard solution and recalibrate.

Mono.E

Alarm Monotony of curve

Description The working curve is not monotonically increasing or monotonically decreasing.

Cause
- The ProCell or calibrator is expired.
- The calibrator did not reach room temperature.

Remedy
1. Replace ProCell.
2. Place the calibrator appropriately.

Prep.E

Alarm Preparation abnormal

Displayed on **Calibration** > **Status** > **Calibration Trace**.

Description The slope value is within the following range: 45.0 to 49.9 mV for Na^+ or K^+ electrodes, -39.9 to -35.0 mV for the Cl^- electrodes.

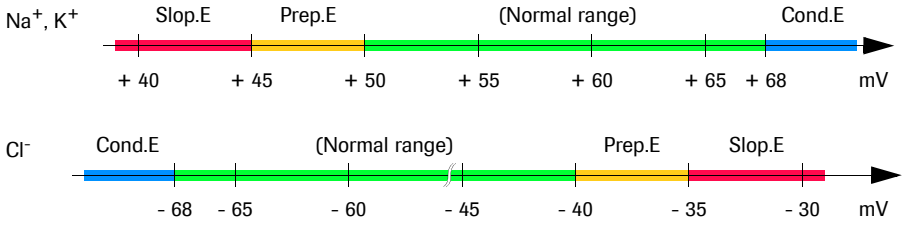

Figure D-5 ISE data alarms and corresponding slope values (EMF values)

Cause
- The electrode is deteriorated.
- The flow path is contaminated.

Remedy
1. Replace the electrode.

Replacing ISE cartridges must only be done by specially trained operators.

For more information, refer to the separate maintenance manual: *Interlock function cobas* **c** 501 *with ISE.*

2. Perform maintenance item (8) Reagent Prime to prime the lines.

Rsp1.E

Alarm Response (ISE) abnormal 1

Description The compensation factor is over the limits (narrower range).

Cause
- The flow path is contaminated.
- The electrode is contaminated or deteriorated.

Remedy
1. Check ISE controls for correct levels.
2. If incorrect, go to step 3 before continuing routine analysis. If correct, go to step 3 after finishing routine analysis at the end of the day.
3. Perform the green wash rack procedure.
   For information on processing the green wash rack, see *Processing green wash rack* on page C-73.
4. Run 10 dummy samples of human serum.
5. Prepare fresh calibrator; place on calibration rack and recalibrate the ISEs.
6. Resume operation. If alarm recurs, repeat steps 3 through 5 a maximum of two times. If alarm recurs, replace the ISE cartridges.

Rsp2.E

Alarm Response (ISE) abnormal 2

Description The compensation factor is over the limits (wider range).

Cause
- The flow path is contaminated.
- The electrode is contaminated or deteriorated.

Remedy See *Rsp1.E* on page D-48.

S1A.E

Alarm S1ABS abnormal

Displayed in **Calibration** > **Status** > **Calibration Trace**.

Description During calibration, expected absorbance is outside the S1 Abs Limit. S1 is read bichromatically for endpoint assays, monochromatically for rate assays.

Cause
- The reagent has been stored or handled improperly or has deteriorated.
- An improper absorbance range is specified for calibrator 1.

Remedy
1. Check reagent storage and handling and calibrator preparation, if applicable.
2. Recalibrate.
3. Check S1 Abs. Limit values on **Utility** > **Application** > **Calib**.
4. Resume operation. If alarm recurs, call Roche service representative.

SD.E

Alarm SD limit error

Description During nonlinear or multipoint linear calibration, the SD value was larger than the SD limit programmed on **Utility** > **Application**.

The result of the calibration is not updated.

Cause
- The calibrator is not placed at a correct position.
- An improper SD limit value is specified.

Remedy
1. Check calibrator positions on **Calibration** > **Calibrator**
2. Choose **Utility** > **Application** > **Calib**. to check the SD limit.
3. Check reagent storage and handling and calibrator preparation. Recalibrate the affected test.
4. Check the standard concentrations on **Calibration** > **Install**. For a calibration with automatic standard dilution; check whether the ratio between concentration, sample, diluent volume and diluted sample is correct on **Utility** > **Application** > **Others**.
5. Resume operation. If alarm recurs, call Roche service representative.

Sens.E

Alarm Sensitivity error

Sensitivity is checked for linear (2 to 6 points), nonlinear, or isozyme-P calibration. This alarm is indicated if the sensitivity value obtained in a calibration falls out of the sensitivity limits specified on **Utility** > **Application** > **Calib**.

A sensitivity value is calculated from the measured absorbance values (Abs) and given concentration values ($Conc$) of the blank calibrator (S_1) and the calibrator S_N:

$(Abs(S_N) - Abs(S_1))/(Conc(S_N) - Conc(S_1))$, where

S_N = Std 2 for 2 Point calibrations and span calibrator for multipoint calibrations

For span calibration, the previous S1 Abs (linear) or previous mean absorbance (nonlinear) of calibrator (1) is used for the sensitivity check.

Cause
- The calibrator is not placed at a proper position.
- The reagent has been prepared improperly or has deteriorated.

  An improper sensitivity limit is specified.

Remedy
1. Check preparation and expiration dates of calibrators and reagents. Recalibrate the affected test.
2. Check sample pipetter for leaks and recalibrate the affected test.
3. Choose **Utility** > **Application** > **Calib**. to check the sensitivity limit and recalibrate the affected test.
4. Resume operation. If alarm recurs, call Roche service representative.

>Sig

Alarm Maximum signal

Description The calibrator signal is larger than the specified upper limit value coded in the **cobas e** pack barcode. Only for qualitative assays.

Cause
- The ProCell calibrator is expired.
- The calibrator does not reach room temperature.

Remedy
1. Replace ProCell.
2. Place the calibrator appropriately.

<Sig

Alarm Minimum signal

Description The calibrator signal is lower than the specified lower limit value coded in the **cobas e** pack barcode. For qualitative and quantitative assays.

Cause
- The ProCell or calibrator is expired.
- The calibrator does not reach room temperature.

Remedy
1. Replace ProCell.
2. Place the calibrator appropriately.

Sig.E

Alarm Minimum/Maximum signal

Description The measured signal of a calibrator for a qualitative test should fall between the designated minimum and maximum signal. If one or more values fall out of the allowable minimum/maximum signal range, the calibration fails.

Cause The measured signal of a calibrator for a qualitative test lies outside the designated minimum/maximum signal range.

Remedy
1. Check the calibrators and reagents and repeat the calibration.
2. Set new calibrators and a **cobas e** pack if necessary, and repeat calibration.

Slop.E

Alarm ISE slope abnormal

Displayed on **Calibration** > **Status** > **Calibration Trace**.

Description The slope value is less than 45.0 mV for Na^+ or K^+ electrodes, or greater than -35 mV for the Cl^- electrode.

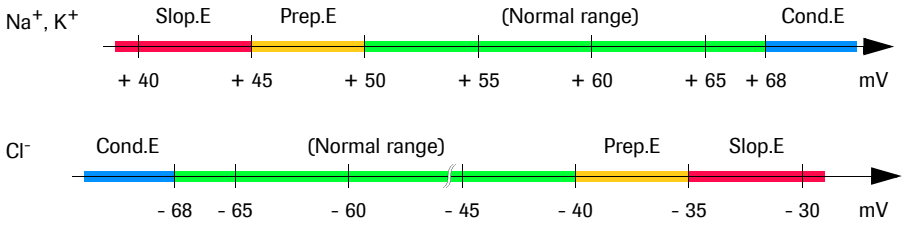

Figure D-6 ISE data alarms and corresponding slope values (EMF values)

Cause
- The electrode is deteriorated.
- Standard solutions Low and High are not placed in the proper positions.
- The sample probe is clogged.

Remedy

1. Replace the appropriate ISE cartridge before continuing routine analysis.

   Replacing ISE cartridges must only be done by specially trained operators.

   For more information, refer to the separate maintenance manual: *Interlock function cobas* **c** 501 *with ISE.*

2. Run 10 dummy samples of human serum.
3. Prepare fresh calibrator; place on calibration rack and recalibrate the ISEs.
4. Resume operation. If alarm recurs, call Roche service representative.

Std.E

This section describes the Std.E alarm for the ISE and photometric unit of the **c** 501 module.

c 501 (ISE)

Alarm Standard error

Description

1. During ISE calibration, any one of the following alarms was encountered:

Data alarm	Data flag
ADC abnormal	ADC.E
Calculation not possible	Calc.?
ISE voltage level error	ISE.E
ISE noise error	ISE.N
Mixing power low level	<Mix
Ultrasonic mixing error	Mix.E
Sample short	Samp.S

Table D-3 Data alarms giving rise to a Std.E alarm when occurring during calibration

2. During calibration, calculation was disabled.

The calibration is not updated if this alarm is issued; i.e. the prior calibration remains in effect.

Cause

- The reagent is empty and has to be replaced.
- The concentration of calibrator is improper or the calibrator is not placed in the proper position.
- An improper check value is specified.

Remedy

1. Correct any other instrument and/or data alarms.
2. Prepare fresh calibrator; place on the rack and recalibrate.
3. Replace reagent, prime, and recalibrate.
4. Choose **Utility** > **Application** to check the calibration parameters.
5. Resume operation. If alarm recurs, call Roche service representative.

c 501 (P)

Alarm Standard error

Description

1. During photometric calibration, any one of the following alarms was encountered:

Data alarm	Data flag
ABS over	>Abs
ADC abnormal	ADC.E
Calculation not possible	Calc.?
Cell blank abnormal	>Cuvet
Duplicate error (c 501)	Dup.E
Linearity abnormal	>Lin
Mixing power low level	<Mix
Ultrasonic mixing error	Mix.E
Prozone error 1, Prozone error 2 / Kinetic unstable	>Proz, >Kin[(a)]
Reaction limit over (substrate depletion)	>React
Reagent short	Reag.S
S1ABS abnormal	S1A.E
Sample short	Samp.S

Table D-4 Data alarms giving rise to a Std.E alarm when occurring during calibration
(a) Not for Std.1

2. During calibration, calculation was disabled.
3. During nonlinear calibration, an extreme value appeared.

The calibration is not updated if this alarm is issued; i.e. the prior calibration remains in effect.

Cause

- The reagent has not been stored or handled properly or is empty and has to be replaced.
- The concentration of calibrator is improper or the calibrator is not placed in the proper position.
- An improper check value is specified.

Remedy

1. Correct any other instrument and/or data alarms.
2. Prepare fresh calibrator; place on the rack and recalibrate.
3. Replace reagent and recalibrate.
4. Choose **Utility** > **Application** to check the calibration parameters.
5. Resume operation. If alarm recurs, call Roche service representative.

Sys.E

Alarm System error

Description An error occurs on the system during measurement.

Cause Check the **Alarm** screen.

Remedy Eliminate problems with the instrument, referring to the **Alarm** screen.

Data alarms for controls

The following table displays the control data alarms applicable to ISE tests, **c** 501 tests, **e** 601 tests, and their presentation (flag) on screens and reports.

Flag	Alarm	c 501(ISE)	c 501(P)	e 601
>AB	AB level range over (Assay Buffer=ProCell)	–	–	✓
AB.E	AB level check error	–	–	✓
>Abs	ABS over	–	✓	–
ADC.E	ADC abnormal	✓	✓	✓
Cal.E (Sample flag)	Calibration result abnormal (Sample flag)	✓	✓	✓
Calc.?	Calculation not possible	✓	✓	✓
CarOvr	Potential microbeads carryover	–	–	✓
Cell.T	Measuring cell temperature out of range	–	–	✓
ClcT.E	Calculated test error	✓	✓	–
Clot.E	Clot pressure abnormal	–	–	✓
CmpT.?	Unable to calculate compensated test	✓	✓	–
CmpT.E	Data error in compensated test	✓	✓	–
>Curr	Current range over	–	–	✓
Curr.E	Current range check error	–	–	✓
>Cuvet	Cell blank abnormal	–	✓	–
Det.S	Carry over detergent short	–	✓	–
Inc.T	Incubator temperature	–	–	✓
ISE.E	ISE voltage level error	✓	–	–
ISE.N	ISE noise error	✓	–	–
>Lin	Linearity abnormal	–	✓	–
Mix.E	Ultrasonic mixing error	✓	✓	–
<Mix	Mixing power low level	✓	✓	–
Over.E	Overflow	✓	✓	✓
Q2.5SD	1-2.5SD (QC error 2)	✓	✓	✓
Q3SD	1-3SD (QC error 1)	✓	✓	✓
R4SD	R-4S (Random error in realtime QC)	✓	✓	✓
>React	Reaction limit over (substrate depletion)	–	✓	–
ReagEx	Reagent expired	–	✓	✓
Reag.F	Reagent film detected	–	–	✓
Reag.H	Reagent hovering	–	–	✓
Reag.S	Reagent short	✓	–	✓
Reag.T	Reagent disk temperature	–	–	✓
S2-2Sa	2-2SA (Syst. error 1 – 2 results)	✓	✓	✓
S2-2Sw	2-2SW (Syst. error 2 – 2 samples / 4 results)	✓	✓	✓
S4-1Sa	4-1SA (Syst. error 3 – 4 results)	✓	✓	✓
S4-1Sw	4-1SW (Syst. error 4 – 4 samples / 8 results)	✓	✓	✓
S10Xa	10XA (Syst. error 5 – 10 results)	✓	✓	✓
S10Xw	10XW (Syst. error 6 – 10 samples / 20 results)	✓	✓	✓

Table D-5 Data alarm list (Sheet 1 of 2)

Flag	Alarm	c 501(ISE)	c 501(P)	e 601
Samp.?	ABS maximum over (non-lin curve)	–	✓	–
Samp.B	Sample air bubble	–	–	✓
Samp.C	Sample clot	✓	✓	✓
Samp.H	Sample hovering	–	–	✓
Samp.S	Sample short	✓	✓	✓
<SigL	Low signal level	–	–	✓
SLLD.E	Sample LLD abnormal	–	–	✓
SLLD.N	Sample LLD noise	–	–	✓
SysR.S	Auxiliary reagent short	–	–	✓
SysR.T	Auxiliary reagent temperature	–	–	✓
< >Test	Sample range over	✓	–	–
>Test / <Test	Upper/Lower technical Limit	–	–	✓
WB.S	Washing buffer short (PreClean)	–	–	✓
WB.T	Washing buffer temperature (PreClean)	–	–	✓

Table D-5 Data alarm list (Sheet 2 of 2)

Q3SD

Alarm 1-3SD (QC error 1)

Description In Realtime QC, the control X or control Y data value is above 3 SD or below -3 SD.

Cause
- Reagent is deteriorated
- Poor precision due to leakage of the pipetter joint
- Proper control values (mean value, standard deviation) are not specified.

This check is performed only when RULE 1-3 SD is selected.

Remedy
1. Check that calibrators, controls and reagents are properly prepared, positioned, and stored.
2. Check that the mean and SD for the specified assays are entered correctly on **QC** > **Install**.
3. Check that calibrator values are correct, if available, on **Calibration** > **Install**.
4. Register a new reagent cassette or **cobas e** pack.
5. Check the pipetter (**Maintenance Check**).

Q2.5SD

Alarm 1-2.5SD (QC error 2)

Description In Realtime QC, the control X value or control Y data value is above 2.5 SD or below -2.5 SD.

Cause
- The reagent is deteriorated (linearity of working curve degraded).
- One control is concentrated or deteriorated.

This check is performed only when RULE 1-2.5SD is selected.

Remedy
1. Register new reagent cassette or replace with a new **cobas e** pack.
2. Prepare a new control. Prepare control X together with control Y and use them for a given period of time.

R4SD

Alarm R-4S (Random error in realtime QC)

Description On Realtime QC, one of X and Y data values is above 2 SD and the other is below -2 SD.

Cause
- The control X and control Y are not set at proper positions.
- Reagent is deteriorated.

This check is performed only when RULE R-4SD is selected. N = run size entered on **Select Rules** window.

Remedy
1. Check that calibrators, controls, and reagents are properly prepared and stored.
2. Check that calibrators and controls are properly positioned on the system.
3. Check proper lot number and expiration dates of calibrators, controls and reagents.
4. Check that the mean and SD for the specified assay are entered correctly on **QC** > **Install**.
5. Check that calibrator values are correct on **Calibration** > **Install**.
6. Resume operation. If alarm recurs, call Roche service representative.

S2-2Sa

Alarm 2-2SA (Syst. error 1 – 2 results)

Description The control X and Y values are above 2 SD or below -2 SD.

Cause
- The calibrators or controls are not properly prepared.
- The controls are not properly positioned on the system.

This check is performed only when RULE 2-2SD is selected.

Remedy
1. Check that calibrators, controls, and reagents are properly prepared and stored.
2. Check that calibrators and controls are properly positioned on the system.
3. Check proper lot number and expiration dates of calibrators, controls and reagents.
4. Check that the mean and SD for the specified assay are entered correctly on **QC** > **Install**.
5. Check that calibrator values are correct on **Calibration** > **Install**.
6. Resume operation. If alarm recurs, call Roche service representative.

S2-2Sw

Alarm 2-2SW (Syst. error 2 – 2 samples / 4 results)

Description The last two control X or last two control Y values were above 2 SD or below -2 SD.

Cause
- The calibrators or controls are not properly prepared.
- The reagents are not properly prepared.

This check is performed only when RULE 2-2SD is selected.

Remedy See *Remedy* of *S2-2Sa* on page D-58.

S4-1Sa

Alarm 4-1SA (Syst. error 3 – 4 results)

Description On realtime QC the last two X and Y data values are above +1 SD or below -1 SD.

Cause
- The calibrators or controls are not properly prepared.
- The reagents are not properly prepared.

This check is performed only when RULE 4-1SD is selected.

Remedy See *Remedy* of *S2-2Sa* on page D-58.

S4-1Sw

Alarm 4-1SW (Syst. error 4 – 4 samples / 8 results)

Description The last four control X or last four control Y values are above 1 SD or below -1 SD.

Cause
- The calibrators or controls are not properly prepared.
- The reagents are not properly prepared.

This check is performed only when RULE 4-1SD is selected.

Remedy See *Remedy* of *S2-2Sa* on page D-58.

S10Xa

Alarm 10XA (Syst. error 5 – 10 results)

Description On realtime QC the last five X and Y data values fall on the + or - side of the mean value.

Cause
- The calibrators or controls are not properly prepared.
- The reagents are not properly prepared.

This check is performed only when RULE 10X is selected.

Remedy See *Remedy* of *S2-2Sa* on page D-58.

S10Xw

Alarm 10XW (Syst. error 6 – 10 samples / 20 results)

Description The last 10 control X or last 10 control Y values are positive-above the mean value or negative-below the mean value.

Cause The mean value specified for one control is improper.

This check is performed only when RULE 10X is selected.

Remedy See *Remedy* of *S2-2Sa* on page D-58.

Data problems without alarm

This chapter provides general information about data problems on the **cobas** 6000 analyzer series instrument without alarm.

Drift of result data

Cause

- Concentration or deterioration of sample
- The calibrator is concentrated or deteriorated.
- The reagent flow path is contaminated. (ISE unit)

Remedy

1. Avoid leaving the sample in the sample cup for a long time.
2. Perform maintenance item (19) System Wash.

Erroneous operation

Cause

- Neglect of preliminary or periodical check(s).
- Carryover between tests.
- Fibrin contained in sample or dust contained in reagent.
- The sample container that was used was not recommended.

Remedy

1. Carry out preliminary and/or periodical check according to the specified procedure.
2. Change the channel, use the wash program, or take any other measure after consulting with the reagent manufacturer.
3. Eliminate fibrin or dust. Be sure to check the sample and reagent before setting them.
4. Perform maintenance item (12) Sample Probe Wash.
5. Use the recommended sample container.

Poor reproducibility

Cause
- A maintenance item is overdue.
- Deterioration of reagent or precipitation of insoluble matter.
- Deterioration of ProCell, CleanCell, or PreClean.
- Poor deionized water quality.
- Reagent handling was not done as recommended.
- Test parameters are not set properly.

Remedy
1. Carry out daily checks and periodical maintenance according to the specified maintenance procedure.
2. Replace with a new reagent cassette or **cobas e** pack. Do not add or mix old and new reagent.
3. Replace with new ProCell/CleanCell or PreClean bottles.
4. The water quality must be 1 µS/cm (microsiemens per cm) or less.
5. Use the recommended reagent handling.
6. Check the completeness of the special wash list. If necessary, install the special wash list according to the recommendation of the manufacturer.
7. Check the application setting of the Open/Close mode in **Utility** > **Application** > **Analyze**. The usage of the Cap Open/Close mode *open upon pipetting* is recommended for all tests in order to guarantee maximum reagent stability.

Result data at high level

Cause
- Concentration of control or sample.
- Deterioration of calibrator.
- Deterioration of ProCell or CleanCell (**e** 601).
- The reagent, control and standard handling were not done as recommended.

Remedy
1. Avoid leaving the sample or control in the sample cup for long time.
2. Avoid leaving the calibrator cup open for a long time.
3. Replace with new ProCell/CleanCell bottles.
4. Use the recommended reagent, control and calibrator handling.

Result data at low level

Cause
- Concentration of calibrator.
- Reagent storage or handling was not done as recommended.
- The test parameters are not set properly.
- Deterioration of ProCell or CleanCell (**e** 601).

Remedy
1. Use the calibrator immediately after opening the cap of the vial.
2. Replace the reagent.
3. Set the concentration of calibrator properly (not for **e** 601).
4. Replace with new ProCell/CleanCell bottles.

Trouble attributed to characteristics of reagent

Cause
- Cross contamination (high value, low value)
- Coloring matter adheres to the reaction cell.

Remedy
1. Perform maintenance item (7) Wash Reaction Parts.
2. Check whether the special wash list is complete. Install the special wash list according to the recommendations of the manufacturer.

See *Special Wash* on page B-301.

Trouble for each test

Cause
- Improper preparation or management of calibrator or control (high value, low value).
- Improper management of reagent (low value).

Remedy
1. Prepare a new calibrator or control.
2. Replace with a new reagent cassette or **cobas e** pack.
3. Set the test parameters properly according to the setting table given by the reagent manufacturer.

Trouble on each analytical module

Cause
- Air bubbles in the sample or reagent syringe (poor reproducibility).
- Liquid leakage from sample or reagent syringe (poor reproducibility).
- Deterioration of ProCell, CleanCell, or PreClean (**e** 601).

Remedy
1. Carry out maintenance and inspection.
2. Replace with new ProCell/CleanCell or PreClean bottles.

Trouble on each channel in same module

Cause
- Air bubbles in the sipper syringe (poor reproducibility).
- Liquid leakage from sipper syringe (poor reproducibility).
- The electrode of the measuring cell is contaminated or deteriorated (high value or low value).

Remedy
1. Call Roche service representative.
2. Perform maintenance item (27) Liquid Flow Cleaning according to the specified procedure.

Rerun list

The following table indicates whether a rerun is automatically *requested* by the system when a data alarm is attached to a result. The rerun conditions are displayed under **c** 501 (ISE unit, Photometric unit) and **e** 601 module, respectively. The automatic rerun column indicates whether a rerun is automatically *performed* by the system.

For more information on performing reruns, see *Processing reruns* on page B-71.

Increase	Sample is rerun at an increased sample concentration
Normal	Sample is rerun at same sample concentration (repeat)
Decrease	Sample is rerun at a decreased sample concentration
No rerun	No rerun is performed on this module

Flag	Alarm	c 501 (ISE)	c 501 (P)	e 601	Auto rerun
>AB	AB level range over (Assay Buffer=ProCell)	-	-	Normal	Yes
AB.E	AB level check error	-	-	Normal	Yes
>Abs	ABS over	-	Decrease	-	Yes
ADC.E	ADC abnormal	Normal	Normal	Normal	Yes
Cal.E	Calibration result abnormal (Sample flag)	Normal	Normal	Normal	No
Calc.?	Calculation not possible	Normal	Normal	Normal	Yes
CarOvr	Potential microbeads carryover	-	-	Normal	Yes
Cell.T	Measuring cell temperature out of range	-	-	Normal	Yes
ClcT.E	Calculated test error	No rerun	No rerun	-	No
Clot.E	Clot pressure abnormal	-	-	Normal	Yes
CmpT.?	Unable to calculate compensated test	Normal	Normal	-	Yes
CmpT.E	Data error in compensated test	Normal	Normal	-	Yes
>Curr	Current range over	-	-	Normal	Yes
Curr.E	Current range check error	-	-	Normal	Yes
>Cuvet	Cell blank abnormal	-	Normal	-	Yes
Det.S	Carry over detergent short	-	Normal	-	No
Edited	Edited test	No rerun	No rerun	No rerun	No
Inc.T	Incubator temperature	-	-	Normal	Yes
>Index	Serum index check	No rerun	No rerun	-	No
>I.xxx	Serum index check	No rerun	No rerun	-	No
ISE.E	ISE voltage level error	Normal	-	-	Yes
ISE.N	ISE noise error	Normal	-	-	Yes
>Kin	Prozone error 2 / Kinetic unstable	-	Decrease	-	Yes
>Lin	Linearity abnormal	-	Normal	-	Yes
Mix.E	Ultrasonic mixing error	Normal	Normal	-	Yes
<Mix	Mixing power low level	Normal	Normal	-	Yes
Over.E	Overflow	No rerun	No rerun	No rerun	No

Table D-6 Rerun list (Sheet 1 of 2)

(a) For urine: Decrease sample volume can only be requested manually.

(b) A rerun is not performed if the normal and increase volumes (**Utility** > **Application** > **Analyze**) are identical.

Flag	Alarm	c 501 (ISE)	c 501 (P)	e 601	Auto rerun
>Proz	Prozone error 1	-	Decrease	-	Yes
>React	Reaction limit over (substrate depletion)	-	Decrease	-	Yes
ReagEx	Reagent expired	-	No rerun	No rerun	No
Reag.F	Reagent film detected	-	-	Normal	Yes
Reag.H	Reagent hovering	-	-	Normal	Yes
Reag.S	Reagent short	Normal	Normal	Normal	No
Reag.T	Reagent disk temperature	-	-	Normal	Yes
>Rept / <Rept	Repeat limit over (upper / lower)	Normal	Normal	Normal	Yes/No due to setting
Samp.?	ABS maximum over (non-lin curve)	-	Decrease	-	Yes
Samp.B	Sample air bubble	-	-	Normal	Yes
Samp.C	Sample clot	Normal	Normal	Normal	No
Samp.H	Sample hovering	-	-	Normal	Yes
Samp.O	Potential carryover during processing of the rerun measurement	-	Normal	Normal	No
Samp.S	Sample short	Normal	Normal	Normal	No
<SigL	Low signal level	-	-	Normal	Yes
SLLD.E	Sample LLD abnormal	-	-	Normal	Yes
SLLD.N	Sample LLD noise	-	-	Normal	Yes
SysR.S	Auxiliary reagent short	-	-	Normal	Yes
SysR.T	Auxiliary reagent temperature	-	-	Normal	Yes
< >Test	Sample range over	Normal	-	-	Yes
>Test	Upper technical Limit	For urine: Decrease[(a)] For other sample types: Normal	Decrease	Decrease	**c** 501: Yes **e** 601: Yes
< Test	Lower technical Limit	Normal	Increase[(b)]	No rerun	**c** 501: Yes **e** 601: No
WB.S	Washing buffer short (PreClean)	-	-	Normal	Yes
WB.T	Washing buffer temperature (PreClean)	-	-	Normal	Yes

Table D-6 Rerun list (Sheet 2 of 2)

(a) For urine: Decrease sample volume can only be requested manually.

(b) A rerun is not performed if the normal and increase volumes (**Utility** > **Application** > **Analyze**) are identical.

Troubleshooting

This chapter provides general information about troubleshooting problems on the **cobas** 6000 system.

In this chapter

Chapter 20

General troubleshooting D-67
Troubleshooting procedures D-67
Operator's primary responsibility D-68
Calling Roche service representative D-68
Chemistry problem D-68
Immunoassay problem D-69
Instrument problem D-69
Instrument troubleshooting D-70
Troubleshooting at Power Up D-70
General instrument troubleshooting D-71
General mechanical problem isolation D-71
Electrical power not available D-71
Cannot access another software screen D-72
Touchscreen does not come on D-72
Touchscreen is difficult to see D-72
Probes do not descend to liquid surface D-73
Bubbles in syringes D-73
c 501 (ISE) troubleshooting D-74
ISE, all results are erratic, excessive air in sipper syringe D-74
ISE, results are erratic D-75
ISE, high internal standard values D-76
ISE, high sodium or low chloride values D-77
Low ISE values D-78

c 501 (P) troubleshooting D-79
High test results D-79
Low test results D-80
Erratic test results D-80
Erratic or biased test results D-82
Single sample or control D-83
Single test (1 reagent) D-83
Tests with more than 1 calibration point D-84
Multiple photometric tests (more than 1 reagent) D-84
All photometric tests D-85
Biased enzyme results D-85
e 601 troubleshooting D-86
Reagent disk cover does not open/close D-86
Trouble replacing ProCell/CleanCell D-86
Trouble replacing PreClean D-87
Drift D-87
Erratic test results D-87
Assay calibration D-88
Calibration cannot be performed D-88
Calibration not released D-88
Duplicates out of limits D-89
Monotony not fulfilled D-89
Missing values D-89
Values out of limits D-90
Calibration factor out of limits D-91
Recovery of controls D-92
Intra assay precision D-92
Inter assay precision (including both channels within 1 module) D-93
Module to module variance D-93
Method comparison D-94

General troubleshooting

This chapter provides general information about troubleshooting problems on the **cobas** 6000 system.

Troubleshooting procedures

To identify and isolate problems effectively, you must understand the theory of operation, operating procedures, emergency procedures and test reaction descriptions covered in this manual. The following areas are covered:

Application problems
- Photometric, immunoassay or ISE
- Reagents
- Samples, controls or calibrators
- Operator error.

Instrument problems
- Electrical/electronic
- Mechanical
- Operator error

Computer problems
- Problems during download procedure, incorrect parameters
- System parameter reading
- Operator error

Facility problems
- Heat
- Humidity
- Power supply
- Water supply
- Drain

Operator's primary responsibility

- Reagent, calibrator and control preparation and storage
- Sample preparation
- Instrument mechanical alignments and adjustments
- Computer parameters and general computer input/output operations
- Basic component replacement
- Basic operator technique, including computer operation
- Maintenance

The basic operator is not responsible for troubleshooting electrical problems except as covered in this part of the Operator´s Manual: Do not attempt removal of printed circuit boards unless specifically instructed to do so by your local Roche service representative.

When troubleshooting, observe and record the alarms and isolate the problem to the area denoted by the alarms. In many cases, you may be able to find the problem, correct it and then resume processing. The remainder of this chapter provides instructions and guidelines to aid in isolating problems.

Calling Roche service representative

If it becomes necessary to consult Roche service representative to troubleshoot a test or instrument problem, be prepared with the following information:

The items are divided into the following categories:
Chemistry problem on page D-68
Immunoassay problem on page D-69
Instrument problem on page D-69

Chemistry problem

- Account number/customer ID number
- Instrument serial number
- Module type, serial number, and software version
- Test(s) affected and other tests on board
- Special wash programming
- Description of the problem including relevant alarm(s) and alarm code numbers
- Catalog number, lot numbers and expiration dates of reagents
- Catalog number, lot numbers and expiration dates of calibrators and controls
- Lot number of ISE cartridges
- Calibration absorbance values from the last few calibrations performed
- Control results from the last few controls performed
- Patient results (with correlation results, if relevant)
- **Reaction Monitor** report for affected test(s).

Immunoassay problem

- Account number/customer ID number
- Instrument serial number and software version
- Module serial number
- If problem module or channel specific
- One assay or more assays affected and other assays on board
- Special wash programming
- Description of the problem including relevant alarm(s) and alarm code numbers
- When problem first occurred
- Catalog numbers, lot numbers and expiration dates of reagents
- Catalog numbers, lot numbers and expiration dates of calibrators and controls
- Calibration results from the last few calibrations performed
- Control results from the last few controls performed
- Patient results (with correlation results, if relevant)

Instrument problem

- Account number/customer ID number
- Instrument serial number and software version
- Description of the problem including relevant alarm(s) and alarm code numbers
- Other instrument or maintenance related information.

Instrument troubleshooting

This chapter provides information about troubleshooting procedures for the system as a whole. Procedures for troubleshooting general instrument problems as well as problems during power up are described.

Troubleshooting at Power Up

Conditions that can affect instrument power up are presented in the table below.

To troubleshoot a problem, determine the category below that best describes the problem, and follow the recommended remedy. If all remedies are unsuccessful, call Roche service representative.

PROBLEM: The instrument does not power up when the operation power switch (on the left side of the rack sampler unit) is switched on.

Cause or description	Remedy
1. Instrument is unplugged.	Plug instrument power cord into socket.
2. Main circuit breaker (bottom left of rack sampler unit) in OFF position.	Switch main circuit breaker to the ON position.
3. Module power switch for the **c** 501 or **e** 601 module is switched off.	Switch on the module power switch.
4. The circuit breaker for the instrument power line in your facility is in the OFF position.	Have your facility electrician check the appropriate circuit breaker.
5. Control unit workstation power cable is unplugged.	Plug the power cable into the socket. If the instrument still does not power up, call Roche service representative.

Table D-7 Troubleshooting at power up

General instrument troubleshooting

This section describes the general instrument troubleshooting.

General mechanical problem isolation

The control unit controls and monitors all mechanical functions of the instrument. When a mechanical problem arises within the instrument, it is immediately recognized by the system. The alarm indicator on the global **Alarm** button lights, alerting you to the problem. Touch **Alarm** (global button) to display the **Alarm** screen with the specific alarm code, date and time the alarm occurred and a description of the alarm. Touch a specific alarm to display the alarm details and appropriate remedy.

For certain problems affecting the instrument's performance, the system terminates the operation mode and enters the sampling stop or stop mode. In the sampling stop mode, the system allows completion of the samples in process unaffected by the failure. If the problem affects all samples in process, the computer immediately terminates the operation mode with a stop or emergency stop.

Some instrument problems may arise that the system does not monitor. If this is the case, no alarm will be issued to alert the operator. Such problems may be caused by worn parts, air leaks in the syringe system, reagent contamination, etc. When you encounter these types of problems, you must decide whether to continue to process samples or to terminate the operation, depending on the possibility of causing damage to the system or reporting erroneous test results.

Electrical power not available

If you are having problems powering the analyzer on, follow the procedure below.

► **To troubleshoot problems with the electrical power**

1. Are the operation ON/OFF switch and circuit breaker switched OFF?
   - If yes, then go to step 2.
   - If no, then go to step 3.
2. Switch on both power switches.
3. Is the power cable plug disconnected at either the instrument or the outlet?
   - If yes, then go to step 4.
   - If no, then go to step 5.
4. Firmly connect the power cable.
5. Is the main power outlet working?
   - If yes, then go to step 8.
   - If no, then go to step 6.
6. Check the circuit breaker in the laboratory distribution box.
7. Ensure line voltage is adequate.
8. If you are still experiencing problems, call Roche service representative.

■

Cannot access another software screen

If you are unable to access another software screen, follow the procedure below.

► To troubleshoot problems accessing another software screen

1. Power OFF the analyzer at the circuit breaker.
2. Check the cabling between the touchscreen and the analyzer.
3. Power ON the analyzer at the circuit breaker. If you are still unable to access another screen, then call Roche service representative.

■

Touchscreen does not come on

If you are having problems with the touchscreen, follow the procedure below.

► To troubleshoot problems with the touchscreen

1. Is the operation ON/OFF switch on the front of the touchscreen switched OFF?
   - If yes, then go to step 2.
   - If no, then go to step 3.
2. Switch the operation switch ON.
3. Is the cable between the touchscreen and the instrument disconnected?
   - If yes, then go to step 4.
   - If no, then go to step 5.
4. Firmly connect the cable.
5. If you are still experiencing problems, call Roche service representative.

■

Touchscreen is difficult to see

If the content of the touchscreen is difficult to see, follow the procedure below.

► To troubleshoot problems with the touchscreen

1. Is the touchscreen dirty?
   - If yes, then go to step 2.
   - If no, then go to step 3.
2. Gently wipe the surface with a dry cloth.
3. Is the ambient lighting too bright?
   - If yes, then go to step 4.
   - If no, then go to step 5.
4. Either reduce the brightness of the ambient lighting or change the direction of the monitor.
5. If you are still experiencing problems, call Roche service representative.

■

Probes do not descend to liquid surface

If the sample probes do not descend to the liquid surface, follow the procedure below.

► To troubleshoot problems with the descending of the probes

1. Are there bubbles on the liquid surface?
   - If yes, then go to step 2.
   - If no, then go to step 3.
2. Eliminate the bubbles in the sample container with an applicator stick.
3. Did the probe tip touch something during descent? If yes, remove the obstacle.
4. If you are still experiencing problems, call Roche service representative.

■

Bubbles in syringes

If you see bubbles in either the reagent and/or sample syringe, follow the procedure below.

► To troubleshoot problems with bubbles in syringes

1. Perform Reagent Prime (8 on **Maintenance** Items list) from **Utility** > **Maintenance**. From the **ISE** area select **All**, from the **Elecsys** area select the appropriate working solution line (**Reagent** or **Pre-wash Sipper**) and enter 5 cycles.
2. If there are still bubbles in the syringe, repeat this process for the appropriate syringe.
3. If bubbles remain in the syringe after the second pipetter prime, call Roche service representative.

■

c 501 (ISE) troubleshooting

This chapter provides information about troubleshooting procedures specific to the ISE module.

ISE, all results are erratic, excessive air in sipper syringe

For problems with erratic ISE results where there is excessive air in the sipper syringe, follow the procedure below.

► **To troubleshoot problems with erratic ISE results and excessive air in the sipper syringe**

1. Check reagent volumes in reagent bottles. Are reagent volumes sufficient and is the ISE Ref. reagent line in the solution?

   If not, replace reagent. Make sure the ISE Ref. reagent line is at the bottom of the bottle. Perform an ISE prime of the relevant reagent(s).

2. Is the system leaking?

   If yes, check all tubings and connections for leaks. Tighten loose fittings. Check seals of the ISE and sipper syringes. Choose **Utility** > **Maintenance** and perform *(8) Reagent Prime* on the ISE unit (Ref).

3. Check position of the measuring cartridges. Are measuring cartridges placed properly?

   If no, place cartridge in correct position. Choose **Utility** > **Maintenance** and perform *(8) Reagent Prime* on the ISE unit (Ref).

4. Check reference cartridge placement. Is the reference cartridge placed properly?

   If no, place cartridge in its proper position. Choose **Utility** > **Maintenance** and perform *(8) Reagent Prime* on the ISE unit (Ref).

5. If problem recurs, call Roche service representative.

■

ISE, results are erratic

For problems with erratic ISE results, follow the procedure below.

► **To troubleshoot problems with erratic ISE results**

1. Is the ISE Ref. reagent line correctly placed in the bottle?

   If no, check line placement, prime reagents and rerun samples.

2. Is there salt buildup on electrodes or syringes or are there any loose connections?

   If yes, tighten any loose or leaky connections, then clean all salt buildup with wet gauze and rerun samples.

3. Check sipper line tubing for kinks or occlusions and remove them.

4. Perform maintenance check *(2) ISE Check*.

   Make sure the difference of the measured voltages for each electrode stays within the following criteria:

   The measured voltage for the reference electrode is allowed to be within -7 mV to +7 mV. The maximum deviation for the entire cycle range should be no more than ±2 mV.

   The measurement-to-measurement difference within the 30 cycle interval should not be greater than 0.2 mV for Na, K, and Cl. Over the total cycle range the difference should no exceed 2 mV.

   If results are not within range, replace ISE reference cartridge.

   For instructions on replacing the reference cartridge, refer to the manual *Interlock function cobas c 501 with ISE*.

5. Are there air bubbles in the sipper line?

   If yes, call Roche service representative.

6. Verify microbial growth is not present in the reagent system. If necessary, clean the ISE reagent flow path.

   See *Processing green wash rack* on page C-73.

7. If problem recurs, call Roche service representative.

■

ISE, high internal standard values

For problems with high/low ISE internal standard values, follow the procedure below.

► To troubleshoot problems with high/low ISE internal standard values

1 Are the ISE IS EMF value and the ISE IS concentration value higher than normal?

The internal standard EMF deviated ±2 mV maximum from the mean value between the Standard Low and Standard High. The concentration of the internal standard ideally lies at:

Na^+: 140 mmol/L

K^+: 5 mmol/L

Cl^-: 100 mmol/L

- If yes, go to step 2.
- If no, go to step 5.

2 Check that the ISE IS is correctly placed on the system.

Replace ISE reagents if required.

For information about replacing ISE reagents, see:
Figure A-47 on page A-93
c 501 – ISE unit on page B-49

3 Check that fresh ISE calibrators are used and that they are placed in the correct positions of the calibrator rack.

Replace ISE calibrators if required.

4 Check the ISE sipper syringe assembly. Are there leaks?

If yes, call Roche service representative.

5 Perform maintenance check (2) ISE Check.

Make sure the difference of the measured voltages for each electrode stays within the following criteria:

Electrode	Criterion
Na^+, K^+, Cl^-	±0.2 mV from cycle to cycle
Ref	7 mV from instrument to instrument, average Ref mV level (over 30 cycles) ±2 mV on one instrument

Table D-8 Stable criteria during ISE Check

- If all values (Na^+, K^+, and Cl^-) are too high or too low, replace the reference cartridge. An *ISE.E* data alarm is displayed in the printout adjacent to the respective EMF if the following limits are exceeded:

  Na^+: -90 to -10 mV;

  K^+: -90 to -10 mV

  Cl^-: 80 to 160 mV

- If only single values (Na, K or Cl) are outside the range, replace the respective electrode.

For instructions on replacing the reference cartridge or a measuring cartridge, refer to the manual *Interlock function cobas c 501 with ISE*.

6 If problem recurs, call Roche service representative.

■

ISE, high sodium or low chloride values

For problems with high sodium and low chloride values, follow the procedure below.

► **To troubleshoot problems with high sodium and low chloride values**

1 Were fresh low and high calibrators used?

If no, recalibrate with fresh calibrators and rerun the samples.

2 Prepare fresh ISE IS and ISE Dil. reagents.

- Replace the old ISE IS and ISE Dil. reagents with the fresh reagent.
- Perform a wash: Choose **Utility** > **Maintenance** and perform *(7) Wash Reaction Parts*.
- Prime the fresh reagent: Choose **Utility** > **Maintenance** and perform *(8) Reagent Prime* on the ISE unit (IS).
- Recalibrate two times with fresh ISE IS.
- Rerun the sample.

3 If problem recurs, call Roche service representative.

■

Low ISE values

For problems with low ISE values, follow the steps procedure.

► **To troubleshoot problems with low ISE values**

1. Were fresh low and high calibrators used?

   If no, recalibrate with fresh calibrators and rerun the samples.

2. Were fresh ISE reagents used?

   If no, prepare fresh ISE IS and ISE Dil.

   - Replace the old ISE IS and ISE Dil. reagents with the fresh reagent.
   - Perform a wash: Choose **Utility** > **Maintenance** and perform *(7) Wash Reaction Parts*.
   - Prime the fresh reagent: Choose **Utility** > **Maintenance** and perform *(8) Reagent Prime* on the ISE unit (IS).
   - Recalibrate two times with fresh ISE IS.
   - Rerun the sample.

3. Is the correct Std 3 (ISE High) value entered under **Calibration** > **Install** > **Chemistry**?

   If no, correct the Std 3 (ISE High) value.

4. If problem recurs, call Roche service representative.

■

c 501 (P) troubleshooting

This chapter provides information about troubleshooting procedures specific to the **c** 501 module.

High test results

The following may cause high test results on the **c** 501 module. Identify which module or modules are giving high test results and troubleshoot according to the procedure below.

► **To troubleshoot problems with high test results**

1. Incubator bath temperature is incorrect.
   - If the bath temperature does not read 37 ±0.1 °C, call Roche service representative.
2. Poor calibration results.
   - Check calibrator preparation.
   - Check proper calibration programming and calibration results. Repeat calibration if necessary.
3. Calibrators were not properly prepared.
   - Check calibrator preparation and calibration results. Repeat calibration.
4. Evaporation of sample or control.
   - Repeat analysis with fresh sample and/or control.

     If samples and controls have been loaded on the racks for more than 2 hours, evaporation of sample or control may lead to lower results for patient samples.
5. Reagents were not properly prepared.
   - Check reagent preparation and expiration date.
6. Information is not correct **Calibration** > **Install**.
   - Verify the calibration points on **Calibration** > **Install** and compare the displayed data with the documentation for a specific test.
   - Verify the calibration sample volume in the application parameters.
7. Incorrect sampling or dilution of sample.
   - Check correct assembly of sample probe and pipetter parts.
   - Check all fittings for leaks.
   - Replace O-rings and seals.
8. Insufficient reagent volume.
   - Check reagent pipetting system for leaks.
   - Replace reagent cassette and repeat analysis.
9. If you are still experiencing problems, call Roche service representative.

■

Low test results

The following may cause low test results on the **c** 501 module. Identify which module or modules are giving low test results and troubleshoot according to the procedure below.

► **To troubleshoot problems with low test results**

1. Reagents are expired.
   - Prepare new reagents (see instructions for use for stability of the prepared reagent).
2. Reagents were not properly stored.
   - Prepare new reagents (see instructions for use for proper storage).
3. Reagents were not properly prepared.
   - Prepare new reagents (see instructions for use for proper preparation instructions).
4. Incubator bath temperature is incorrect.
   - If the bath temperature does not read 37 ±0.1 °C, call Roche service representative.
5. Evaporation of calibrator.
   - Repeat analysis with fresh calibrator.

     If calibrators have been loaded on the racks for more than 2 hours, evaporation of calibrator may lead to lower results for patient samples.
6. Calibrators were not properly prepared.
   - Check calibrator preparation and repeat the calibration with fresh calibrators.
7. Information is not correct on **Calibration** > **Install**.
   - Check **Calibration** > **Install** and compare the displayed data with the documentation for a specific test.
   - Verify the calibration sample volume in the application parameters.
8. Ensure there is sufficient sample in the container. Check instrument specifications for minimum sample volumes.
9. Check sample for fibrin clotting.
10. Check sample pipetting systems for leaks and air bubbles.
11. Check sample probe for contaminants and obstructions.
12. Repeat analysis with appropriate sample volume.
13. If you are still experiencing problems, call Roche service representative.

■

Erratic test results

The following may cause erratic test results on the **c** 501 module. Identify which module or modules are giving erratic test results and troubleshoot according to the procedure below.

► To troubleshoot problems with erratic test results

1. Fibrin clot in 1 sample container or in sample probe (if low values printed for several samples).
   - Check sample for fibrin clot; remove fibrin and repeat analysis.
   - Check sample probe for fibrin clot; clean probe (perform maintenance item *(12) Sample Probe Wash*) and perform an air purge.
     See also *Cleaning sample probe, reagent probes, ISE probe and ISE sipper nozzle* on page C-77.
   - Replace sample probe and sample probe seal.
2. Sample probe does not reach the bottom of the reaction cell when dispensing sample.
   - Perform mechanism check and verify that the probe reaches the bottom of the cell.
   - Check the spring mechanism to make sure the probe moves up and down freely.
   - The sample probe tip may be damaged. Replace the sample probe.
3. Maintenance was not performed properly or at the recommended frequency on sample or reagent pipetters or probes.
   - Check the **Maintenance** screen and perform any overdue maintenance functions.
   - If maintenance was recently performed on the sample probe(s), reagent probe(s), rinse nozzles, or any pipetters:
     - Was an air purge performed after maintenance?
     - Were all parts correctly assembled?
     - Have all tubings and seals been checked for air leaks?
     - Were sample and reagent probe seals replaced?
4. Insufficient sample volume.
   - Repeat analysis with sufficient sample.
5. Contaminated incubator bath.
   - Check for particles in the incubator bath. If particles exist, perform the incubation cleaning procedure
     See *Cleaning the incubator bath* on page C-92.
   - Check for foaming, perform incubation water exchange.
   - Check for sufficient EcoTergent on the module. Perform incubation water exchange.
6. Check for sufficient volumes of cell cleaning detergents.
7. Check the cell rinse unit for contamination and clean the nozzles if necessary.
   For more information, see *Cleaning cell rinse nozzles* on page C-79.
8. If you are still experiencing problems, call Roche service representative.

■

Erratic or biased test results

For problems with erratic or biased test results on **c** 501 module, identify which module or modules are having problems and troubleshoot according to the procedure below.

► **To troubleshoot problems with erratic or biased test results**

1. Verify that the deionized water supply is free from contamination.
2. Check calibrators used on all modules.
   - Calibrators were not properly prepared. Repeat calibration with fresh calibrator.
   - Check calibrator preparation.
3. Information is not correct on **Calibration** > **Install**.
   - Verify the calibration points on **Calibration** > **Install** and compare the displayed data with the documentation for a specific test.
   - Check that the calibration sample volume in the application parameters is correct.
4. Check sample for fibrin clotting.
5. Ensure there is sufficient sample in the container. Check instrument specifications for minimum sample volumes.
   - Repeat analysis with appropriate sample volume.
6. If you are still experiencing problems, call Roche service representative.

■

Single sample or control

For problems with a single sample or control on the **c** 501 module, identify which module or modules are having problems and troubleshoot according to the procedure below.

► **To troubleshoot problems with a single sample or control**

1. Verify samples and controls are placed in the proper rack and positions. If necessary, correct the sample or control placement and rerun the sample.
2. Verify the control value ranges and lot numbers entered on **QC** > **Install** are correct. If necessary, correct the control value range or lot number on **QC** > **Install**.
3. Verify the sample and/or control volume is sufficient. Verify the selected sample cup on **Workplace** > **Test Selection**.
4. Verify the sample integrity is acceptable (fibrin, lipemia, hemolysis, icterus). If necessary, collect fresh sample and rerun.
5. Verify the appropriate sample type is selected (serum/plasma, CSF, urine, supernatant, other) and the specimen was collected appropriately. If necessary, correct the sample type; check the instructions for use for acceptable specimen types. Check the specimen collection; check the instructions for use for acceptable specimen collection methods.
6. Verify the collection time and date of the sample are correct. If necessary, collect fresh sample.
7. Verify correct test selections were made on **Workplace** > **Test Selection**. If necessary, correct any selections and rerun the sample.
8. If you are still experiencing problems, call Roche service representative.

■

Single test (1 reagent)

For repeated or consistent problems with a single test on the **c** 501 module, identify which module is having problems and troubleshoot according to the procedure below.

► **To troubleshoot problems with a single test (1 reagent)**

1. Verify that reagents have not expired, or are not contaminated. If necessary, insert a new reagent cassette.
2. Verify the correct calibrator code and setpoints are used. If necessary, correct the calibrator code and setpoints and repeat the calibration.
3. Verify the special wash programming, if applicable.
4. If you are still experiencing problems, call Roche service representative.

■

Tests with more than 1 calibration point

For problems with tests with more than 1 calibration point on the **c** 501 module, identify which module or modules are having problems and troubleshoot according to the procedure below.

► **To troubleshoot problems of tests with more than 1 calibration point**

1. Verify calibrators were properly prepared and stored. If necessary, prepare new calibrators and recalibrate.
2. Verify the assigned calibrators are in the correct positions. If necessary, place calibrator(s) in correct position(s), recalibrate and rerun samples. Verify that required diluents are on board.
3. If you are still experiencing problems, call Roche service representative.

■

Multiple photometric tests (more than 1 reagent)

For problems with multiple photometric tests on the **c** 501 module, follow the procedure below.

► **To troubleshoot problems with multiple photometric tests (more than 1 reagent)**

1. Verify there are sufficient volumes of special wash solutions and detergents. If necessary, replace needed special wash solutions, detergent and rerun samples.
2. Check the reagent probes for barbs, obstructions or leaks.
3. Verify the R1 system is not leaking. Perform an air purge. If the system is leaking, check connections in the R1 probe arm and check connections in the reagent 1 syringe(s).
4. Verify the incubator bath is free of debris and foam. If necessary, perform incubator bath maintenance.
5. Perform a photometer check. Verify the Photometer Check report is within acceptable limits (< 14000). If it is not, replace the photometer lamp. Perform a cell blank. Calibrate all photometric tests.
6. Verify the Reagent 2 probe is aligned properly. If necessary, perform a reagent probe check.
7. Verify the R2 probe system is not leaking. Check connections in the R2 delivery system. Check syringe connections. Perform an air purge.
8. If you are still experiencing problems, call Roche service representative.

■

All photometric tests

For problems with all photometric tests on the **c** 501 module, identify which module or modules are having problems and troubleshoot according to the procedure below.

► **To troubleshoot problems with all photometric tests**

1. Verify the sample probe is not blocked or does not have barbs at the tip. If necessary, clean the probe. Perform an air purge.
2. Verify the sample system is not leaking. If necessary, check tubings and connections. Perform an air purge and check if there are air bubbles in the syringe.
3. Verify controls/calibrators were properly prepared and stored. If necessary, prepare new controls/calibrators.
4. Check that ultrasonic mixers operate properly.
5. If you are still experiencing problems, call Roche service representative.

■

Biased enzyme results

For problems with biased enzymes on the **c** 501 module, identify which module or modules are having problems and troubleshoot according to the procedure below.

► **To troubleshoot problems with biased enzymes**

1. Verify the incubator bath level is above the photometer lens.
2. Verify the incubator bath temperature displayed on the **System Overview** screen is 37 ±0.1 °C. Verify there is no *Incubator Bath Temperature* alarm present.

   If the temperature is out of range, perform an incubation water exchange, allow the temperature to stabilize and recheck the bath temperature. If the temperature is still unacceptable, call Roche service representative.
3. Verify controls were prepared using volumetric pipettes. If not, prepare new controls using a volumetric pipette.
4. Perform a full calibration or blank update.
5. Perform a Photometer Check. Verify the **Photometer Check** report is within acceptable limit (< 14000). If not, replace the photometer lamp. Perform a cell blank. Calibrate all photometric tests.
6. Verify the syringe fittings are not loose. If necessary, correct any loose fittings.
7. If you are still experiencing problems, call Roche service representative.

■

e 601 troubleshooting

This chapter provides information about troubleshooting procedures specific to the **e** 601.

Reagent disk cover does not open/close

If you are having problems opening or closing the reagent disk cover, follow the procedure below.

► **To troubleshoot problems with opening or closing the reagent disk cover**

1. The reagent disk cover is keyed. Is the reagent disk cover properly oriented for placement?
   - If yes, then go to step 3.
   - If no, then go to step 2.
2. Make sure that the reagent disk cover fits into the key before locking.
3. Is there an obstacle around the cover?
   - If yes, then go to step 4.
   - If no, then go to step 5.
4. Remove the obstacle.
5. If you are still experiencing problems, call Roche service representative.

■

Trouble replacing ProCell/CleanCell

If you are having problems replacing a ProCell or CleanCell reagent bottle, follow the procedure below.

► **To troubleshoot problems with replacing a ProCell or CleanCell reagent bottle**

1. The auxiliary reagent bottles are keyed for proper placement. Are you placing the bottle in its appropriate position?
   - If yes, then go to step 3.
   - If no, then go to step 2.
2. Remove the bottle and check the position before placing the reagent into its proper place.
3. Is there an obstacle beneath the auxiliary reagent bottle?
   - If yes, then go to step 4.
   - If no, then go to step 5.
4. Remove the obstacle.
5. If you are still experiencing problems, call Roche service representative.

■

Trouble replacing PreClean

If you are having problems replacing a PreClean bottle, follow the procedure below.

► **To troubleshoot problems with replacing a PreClean reagent bottle**

1. Ensure PreClean bottles are fully inserted.
2. Ensure the caps have been slightly opened after insertion.
3. If you are still experiencing problems, call Roche service representative.

■

Drift

Control or sample shows drift over a period of time

Possible causes

- Evaporation or incorrect storage conditions of **cobas e** packs.
- **cobas e** packs are not at the proper temperature.
- Recommended calibration frequency not used.
- Recommended handling of controls and/or samples not followed (stability and evaporation).

► **To troubleshoot problems with drift of controls or samples**

1. Have you handled the reagents, calibrators, and/or controls according to the instructions for use?
2. Have you performed recommended maintenance?
3. If you are still experiencing problems, call Roche service representative.

■

Erratic test results

Possible causes

- Foam on sample
- Foam on assay reagents
- Foam on controls
- Not-recommended sample container used

► **To troubleshoot problems with erratic test results**

1. Have you handled the reagents, samples and controls according to instructions for use?
2. Have you performed the recommended maintenance?
3. If you are still experiencing problems, call Roche service representative.

■

Assay calibration

This section describes troubleshooting on assay calibration.

Calibration cannot be performed

Possible causes

- Calibrator vial previously used on the instrument.
- **cobas e** pack or calibrator not on board.
- Missing diluent, for example for CA15-3.
- Calibration not activated in the software.
- Calibrator expiration date exceeded.
- Invalid or unreadable calibrator vial barcode, or calibrator lot specific data not downloaded.
- Data link not available for combination **cobas e** pack and CalSet.
- CalSet 1 and CalSet 2 not on same rack or empty space between CalSets.

► **To troubleshoot problems with calibrations**

1. Check barcode of calibrator vial and **cobas e** pack (barcode damaged?, correct position of the barcode?).
2. Check if calibrator lot specific data has been downloaded.
3. Wipe off the dust on the surface of the barcode reader.
4. Dry the calibrator vial if it is wet.
5. Check calibrator position.
6. If you are still experiencing problems, call Roche service representative.

■

Calibration not released

For more information, see:
Duplicates out of limits on page D-89
Monotony not fulfilled on page D-89
Missing values on page D-89
Values out of limits on page D-90
Calibration factor out of limits on page D-91

Duplicates out of limits

Possible causes Foam on calibrator or assay reagents.

► To troubleshoot problems with duplicates out of limits

1. Have you handled the reagents and calibrators according to the instructions for use?
2. Perform a new assay calibration (new CalSet).
3. Have you performed recommended maintenance?
4. If you are still experiencing problems, call Roche service representative.

■

Monotony not fulfilled

Possible causes Calibrators not transferred to the correct barcoded calibrator vials.

► To troubleshoot monotony problems

1. Have you handled the reagents and calibrators according to the instructions for use?
2. Perform a new assay calibration (new CalSet).
3. If you are still experiencing problems, call Roche service representative.

■

Missing values

Possible causes
- Empty calibrator.
- Insufficient volume of calibrator or calibrators.

► To troubleshoot problems with missing values

1. Have you handled the reagents and calibrators according to the instructions for use?
2. Perform a new assay calibration (new CalSet).
3. If you are still experiencing problems, call Roche service representative.

■

Values out of limits

Values below minimum signal or signal difference between CalSet 1 and CalSet 2 or maximum signal out of limits (latest criteria valid for qualitative assays only).

Possible causes

- Possible causes in connection with reagent handling:
  - **cobas e** pack not at correct temperature.
  - **cobas e** pack not within allowed stability after opening.
  - **cobas e** pack expiration date exceeded.
  - **cobas e** pack stressed (storage or transport conditions not as recommended, for example, temperature, upright position).
  - Foam on assay reagents.
- Possible causes in connection with Calibrator handling:
  - Calibrator not at correct temperature.
  - Foam on calibrator
  - Calibrator handling not as recommended.
  - Calibrator transferred to the incorrect calibrator vial. For example, CalSet 1 transferred to CalSet 2 vial.
  - Calibrators not within allowed stability after opening and/or reconstitution.

► **To troubleshoot problems with values out of limits**

1. Have you handled the reagents, calibrators, and/or controls according to the instructions for use?
2. Perform a new assay calibration (new **cobas e** pack or new CalSet).
3. Have you performed recommended maintenance?
4. If you are still experiencing problems, call Roche service representative.

■

Calibration factor out of limits

Only valid for quantitative assays.

Possible causes

- Possible causes in connection with reagent handling:
  - **cobas e** pack not at correct temperature.
  - **cobas e** pack not within allowed stability after opening.
  - **cobas e** pack expiration date exceeded.
  - **cobas e** pack stressed (storage or transport conditions not as recommended, for example, temperature, upright position).
  - Foam on assay reagents.
- Possible causes in connection with Calibrator handling:
  - Calibrator not at correct temperature.
  - Foam on calibrator
  - Calibrator handling not as recommended.
  - Calibrator transferred to the incorrect calibrator vial. For example, CalSet 1 transferred to CalSet 2 vial.
  - Calibrators not within allowed stability after opening and/or reconstitution.

► **To troubleshoot problems with calibration factor out of limits**

1. Have you handled the reagents, calibrators, and/or controls according to the instructions for use?
2. Perform a new assay calibration (new **cobas e** pack or new CalSet).
3. Have you performed recommended maintenance?
4. If you are still experiencing problems, call Roche service representative.

■

Recovery of controls

Control values out of range

Possible causes

- Possible causes in connection with Control handling:
  - Controls not at correct temperature.
  - Control not within allowed stability after opening or reconstitution.
  - Control expiration date exceeded.
  - Foam on controls.
  - Control handling not as recommended.
- Possible causes in connection with reagent handling:
  - **cobas e** packs not at correct temperature.
  - **cobas e** packs not within allowed stability after opening.
  - **cobas e** pack expiration date exceeded.
  - **cobas e** packs stressed (storage or transport conditions not as recommended, for example, temperature, upright position).
  - Foam on assay reagents or auxiliary reagents.
- Possible causes in connection with Calibrator handling:
  - Recommended calibration frequency not followed.

► **To troubleshoot problems with control values out of range**

1. Have you handled the reagents, calibrators, and/or controls according to the instructions for use?
2. Use another control vial.
3. Perform a new assay calibration (new **cobas e** pack and CalSet).
4. Have you performed recommended maintenance?
5. If you are still experiencing problems, call Roche service representative.

■

Intra assay precision

Intra assay precision out of expected range

Possible causes

- Foam on assay reagents.
- **cobas e** packs and/or sample not at correct temperature.
- **cobas e** packs stressed (storage or transport conditions not as recommended, for example, temperature, upright position).

► **To troubleshoot problems with intra assay precision**

1. Have you handled the reagents, calibrators, and/or controls according to the instructions for use?
2. Have you performed recommended maintenance?
3. If you are still experiencing problems, call Roche service representative.

■

Inter assay precision (including both channels within 1 module)

Inter assay precision out of expected range

Possible causes

- **cobas e** packs and/or sample not at correct temperature.
- Foam on assay reagents.
- **cobas e** pack stressed (storage or transport conditions not as recommended, for example, temperature, upright position).
- Calibration not carefully carried out.
- Recommended calibration frequency not followed.

► **To troubleshoot problems with intra assay precision**

1. Have you handled the reagents, calibrators, and/or controls according to the instructions for use?
2. Have you performed recommended maintenance?
3. If you are still experiencing problems, call Roche service representative.

■

Module to module variance

Deviation of control and samples when measured with different modules.

Possible causes

- Recommended handling of assay, auxiliary reagents and calibrators, controls not followed (for example, stability, evaporation).
- Calibration not carefully carried out.

► **To troubleshoot problems with the module to module variance**

1. Have you handled the reagents, auxiliary reagents, calibrators, and/or controls according to the instructions for use?
2. Have you performed recommended maintenance?
3. If you are still experiencing problems, call Roche service representative.

■

Method comparison

Deviation of method comparison when compared with competitors (internal, external)

Possible causes

- Different standardizations (reference material).
- Different antibodies (for example, HCG on Elecsys/ES).
- Different methods (RIA/ELISA etc.).
- Different units (conversion factor between units sometimes different from competitor to competitor).
- Different sample material +/- anticoagulants.
- Recommended calibration frequency not followed.
- Calibration handling not as recommended.
- The number of samples is too small, and/or all results are within a very limited range compared to the measuring range of the assay.
- Reagent lot to reagent lot variance.
- System to system variance.

► **To troubleshoot problems with the method comparison**

1. Have you handled the reagents and calibrators according to the instructions for use?
2. Have you performed recommended maintenance?
3. If you are still experiencing problems, call Roche service representative.

■

Glossary E

Glossary

This glossary is a compendium in which to look up the meaning of technical terms used in conjunction with the **cobas** 6000 analyzer series.

Numbers

2-dimensional barcode A type of barcode on **cobas e** packs, calibrators, and control barcode cards or sheets. These matrix barcodes, which use PDF417 symbology, contain more information than traditional linear barcodes.

A

absorbance (Abs) The instrument displays an absorbance by ten-thousandfold value.

aspiration station A position on the **e** 601 module located next to the incubator where an AssayCup containing the reaction mixture is placed for aspiration into the measuring cell by the sipper probe.

assay 1. A specific test.
2. The process of measuring a substance.

AssayCup A plastic vessel that is used to hold the assay reaction mixture. An alternative term is reaction vessel.

AssayTip A disposable pipette tip made of black, conductive plastic. AssayTips are used by the sample probe.

assigned value (Roche-defined) Roche-defined concentration for calibrator material that is encoded on the calibrator barcode card or e-barcode. See also *target value*.

automatic calibration 1. Automatic timeout calibration. A calibration of a parameter performed if a specified time interval expires. The calibration can be defined for each method separately.
2. Automatic calibration after a cassette or a cassette of a new lot is registered. The calibration can be defined for each method separately.
3. Automatic calibration on QC failure. A calibration request is generated by the system if a QC value is outside a predefined range.

Automated Download (ADL) A service that provides the information necessary for analysis, for example analytical parameters or concentration information from the data center. ADL is a cobas TeleService application. See also *cobas TeleService*.

automatic QC A quality-control function that automatically samples QC material, test-specifically according to defined time intervals.

automatic rerun The repetition, without operator intervention, of tests that have results with data alarms.

auxiliary reagent A non-test specific reagent that is needed to perform testing on an analyzer.

B

backup 1. The saving of data onto supplementary storage media such as disks or DVDs. If such data is required but is no longer available from the main storage (instrument database), it can be restored from a backup copy.
2. An internal instrument-specific process to establish the data for a backup; only used in a case of routine instrument break down.

backup operation A software function that allows to place routine racks with barcoded samples manually on the **c** 501 module. Intended to be used when trouble occurs in the rack sampler and a rack cannot be conveyed.

barcode mode The operational mode when a system is configured to operate using barcoded samples.

barcode type Typical sample barcode types used in the IVD industry are Code39, NW7 (Codabar), ITF, and Code 128.

bichromatic measurement The measured absorbance of the primary wavelength and the secondary wavelength.

blank cell Calibration procedure for ECL instruments performed by Roche service representative.

bound/free separation The physical separation of reagent or sample that is bound to a solid phase (the microbeads) from free reagent or sample. With ECL systems this step occurs in the measuring cell.

Bracketing A mode of operation in which patient results have to be surrounded by successful control results before they are released.

bridging principle One of three test principles that can be applied to ECL immunoassays. It is used to detect antibodies (such as IgG, IgM, or IgA) in the sample. See also *competitive principle*, *sandwich principle*.

C

calculated result See calculated test.

calculated test A test result calculated from different individual analytical methods with a given formula such as ratio A/B.

calibration The process that establishes the relation between measured signals (e.g. from a photometer, photomultiplier, or ion-selective electrodes) and corresponding concentration values of a calibrator.

calibration curve A plot of measured signal values (determined during calibration) versus known concentration values of calibrators.

calibration factor 1. In ECL systems (**e** 601), one of the six calibration quality criteria used to verify the validity of a calibration. This criterion is only used for reagent pack calibrations. It is derived by comparing two different calibrations. A factor of 1.0 is achieved when two calibrations are equal. A successful calibration has a factor of 0.8-1.2.
2. In photometric systems (**c** 501) the K factor and S1Abs (linear calibration), and factors A, B, C for non-linear calibration curves.

calibration frequency A specified interval at which an assay should be calibrated. Also referred to as calibration stability. It is implemented in the application parameters which are downloaded via **cobas** link or encoded in the reagent barcode of cobas e packs.

calibration function The type of calibration (for example, Rodbard function, linear function, or cutoff function). A mathematical model that describes the relationship between a signal and a concentration in the calibration curve. See calibration curve.

calibration masking A function that masks a **cobas c** pack or **cobas e** pack for a module or measuring channel when no valid calibration is available for this particular module or measuring channel.

calibration monitor A function that prints the measured absorbance of the standard solution and the calibration factors, at the time of calibration, for every measurement item.

calibration NOW A system-generated recommendation to carry out calibration within a forthcoming defined time interval (Remaining time on **Calibration** > **Status** screen).

calibration quality criteria Calibration checks applied to the auto-validation of every calibration on the analyzer.

calibration trace A graph used to review the measurements of the 50 most recent calibrations for a specific test.

calibration type 1. In clinical chemistry: One of the following: Linear, RCM, RCM2T1, RCM2T2, Spline, Line Graph. Each calibration type corresponds to one specific type of mathematical function. See calibration function.
2. For ECL systems: Lot calibration (L-Cal) or reagent pack calibration (R-Cal).
3. In clinical chemistry: Lot calibration or cassette calibration.

calibration validation Analysis, performed by software, to check a calibration data set against specific criteria. Calibration validation results are: successful or failed.

calibration verification The assaying of calibration materials in the same manner as patient samples to confirm that the calibration of the instrument kit or test system has remained stable throughout the laboratory's reportable range for patient test results (for example, Elecsys CalChecks).

calibrator A material of known concentration of the parameter that can be presented to the analytical instrument for calibration purposes. Also referred to as standard.

calibrator code The identification number of the standard solution in calibration measurement.

capacitance An electrical property that provides the basis for liquid level detection in sample probes. The probes carry a high-frequency, low-voltage electrical charge. Frequency and electrical charge characteristics are altered and sensed when the probe touches liquid.

carryover Contamination of a reaction mixture of one assay by reagents or sample material of another assay.

cassette The integrated reagent carrier consisting of two or three reagent bottles and barcoded labels. The term cassette, on cobas systems, is related to different reagent carriers, namely INTEGRA cassettes, **cobas c** packs, or **cobas c** pack MULTI.

cell blank The process of measuring the absorbance of all reaction cells, filled with water, at all wavelengths. The cell blank values are stored on the database. By periodic cell blank measurement, reaction cells can be screened for contamination or damage.

cell holder A container holding the electrode in the electrode measurement unit.

cell rinse units A device for cleaning the reaction cells with detergent and water and for dispensing and aspirating cell blank water.

channel 1. The number of reagent positions on an analytical instrument.
2. A specific reagent position.
3. The two measuring cells on the **e** 601 are sometimes referred to as channel one and channel two.

check digit A verification number used in barcodes and software.

check sum The result of a mathematical procedure to validate the integrity of a set of data.

circuit breaker The main power switch on the instrument. It controls the power supply including the power to the Peltier elements. Consequently it controls the temperature in each reagent disk, incubator, and detection unit.

cleaning solution See wash solution.

client/server A network in which computer processing is distributed among many individual PCs (clients) and a more powerful, central computer (server).

clot detection 1. A device built into the pipetting system to detect clots and to avoid false pipetting.
2. The procedure of detecting a clot.

cobas® The "umbrella brand name" for a broad range of products and services for use in professional IVD laboratories and physician's office settings.

cobas c pack The name given to a reagent cassette used on **cobas c** systems and COBAS INTEGRA® systems.

cobas c pack MULTI The name given to an empty, but assembled and barcoded, cassette that can be used for Roche or Non-Roche reagents. The word multi in this name stands for multi-purpose.

cobas e pack The name given to a reagent pack used on cobas e systems and Elecsys® systems.

cobas link The infrastructure of network connections that enables cobas TeleService to exchange information between the Roche service network and a customer's laboratory.

cobas link PC A specific desktop computer, located in the laboratory, that has been configured to act as a gateway between Roche systems and the Internet. As well as providing a communication link, the **cobas** link PC also stores data and documentation for assay processing and can provide a data archive.

cobas TeleService The set of software applications that use **cobas** link to exchange service information between Roche service network and a customer's laboratory. cobas TeleService provides remote monitoring and diagnosis, hotline support, and software and documentation updates.

Code39 A barcode type for sample tubes that can be read by the barcode reader.

coefficient of variation A statistical measure used to describe imprecision. Often abbreviated to CV.

compensated test A test that has the result modified by a formula that takes account of known or defined interference factors.

competitive principle One of three test principles that can be applied to ECL immunoassays. It is used to detect analytes of low molecular weight (for example, FT3). See also *bridging principle*, *sandwich principle*.

conditioning The process of letting serum-type liquid flow through the flow path before electrolyte measurement.

consumables A generic term for items that are used during test processing and must be replaced on a regular basis by the operator. Examples of consumables include AssayCups, printer paper, and reaction cells.

consumables area The area of an analyzer where the consumables, such as AssayCups and AssayTips, are stored.

continuous loading/access Instrument function that allows loading of samples and reagents during operation.

control ID The abbreviated name for a control material, for example PC U1 or PC TSH. Control IDs are used on software screens and windows where limited space prevents the use of longer names.

control material A material used to assess the performance of an analytical procedure or part of an analytical procedure. Also called the control sample.

control name The name of a control material, for example PreciControl Universal.

control SD value The acceptable variation SD value of a quality control sample.

control unit An external PC or printer by which an analytical system is controlled. The control unit also serves as the user interface.

core unit The backbone of modular instruments for sample transportation.

correction item A function that corrects the measurement result of one item by using figures or the measurement result of other tests.

cumulative QC The accumulated data and associated statistics of individual QC data.

cup disposal opening Openings where used AssayCups are disposed into the solid waste.

cup-on-tube The placement of a smaller secondary sample container (for example a Hitachi Cup) on top of a primary sample tube

cycle The instrument time interval during which pipetting or measurement can be carried out.

cyclic QC Controls run at fixed intervals.

D

data alarm Printed or displayed notification that occurs if a result (including calibration or QC results) is unexpected or abnormal; an indication of unusual reaction or instrument conditions, for example, insufficient sample or reagent.

data flag See data alarm.

database A defined section of the computer memory where all instrument, assay, and patient-relevant data are processed and stored.

database management system A software system that provides the necessary procedures and programs to collect, create, organize, store, retrieve, and maintain databases or data files with security and integrity.

dead volume See minimum sample volume.

default profile A predefined set of tests that the analyzer automatically applies to a sample unless the operator specifies a different set of tests.

demographics Patient-related data such as name, date of birth, and gender.

detection unit A hardware unit comprising a photomultiplier tube, Peltier elements, flow-through measuring cell, magnet drive assembly, and an amplifier circuit board.

deviation of duplicate measurements See duplicate limit.

Diagnostics The status that is required to perform system diagnostics and hardware error tracking actions. The field service engineer may request a system to go to Diagnostics mode to perform such procedures. The system may require initialization afterwards to resume normal operation.

dilute waste solution A waste solution resulting after rinsing with water.

dilution factor A software preset or manually assigned dilution ratio that is used by the analyzer to perform a requested dilution.

disk position A dedicated position on the reagent or sample disk.

down time The period of non-operation between an instrument failure and the resumption of operation.

dual value method A mode of expression of the control chart in real-time quality control. For X-axis and Y-axis, measure simultaneously the average and the standard deviation of control of a low value and a high value, and display them by X and Y coordinates, respectively.

duplicate limit A calibration quality criterion. For a successful calibration, duplicate measurements must be within a specified limit.

dynamic range The reportable range of an assay. This range extends from the lower detection limit to the limit of linearity.

E

EcoTergent 1. A detergent, with antibacterial properties, that can be added to the incubator bath where it acts as a surfactant, reducing the formation of foam. 2. A surfactant diluted for use in some cleaning procedures.

electromotive force (EMF) The physical principle that provides the basis for electrolyte measurement.

emergency stop An instrument alarm level that immediately stops all instrument functions.

endpoint assay An analytical technique taking measurements after a reaction is completed or has been halted. See also *rate assay*.

error handling A process during which the analyzer attempts to recover from an error condition (for example, an AssayTip is not picked up from the magazine). If the analyzer cannot successfully recover from error, an alarm is issued and the instrument is halted.

E-stopped A status indicating that the system has performed an emergency stop (**E. Stop**). This could be due to hardware failure or because any of the safety devices have requested an emergency stop. The system requires either complete power off, or at least initialization, to resume normal operation.

expected range The predefined range of test result values expected for a defined group of healthy patients or materials. Also known as "reference" range.

expected value A value for a test result that can be considered as a "normal" result.

expiration date Also called the expiry date. The end of a period until which Roche Diagnostics guarantees product claims for its reagents, calibrators, and controls.

extended dynamic range The measuring range for an assay at its highest dilution.

F

filter A process that sorts data for viewing, documenting, or printing according to pre-defined criteria

first registration The date and time when a reagent or sample was successfully recognized by the barcode reader for the very first time

functional sensitivity The concentration of an analyte at which a predefined level of imprecision is obtained.

G

global button A button that allows access to the global software screens and that can be used at any time.

gripper A technical device that transports AssayCups and AssayTips to their required destination on the analyzer (for example, to the incubator). The gripper moves in three directions (X, Y, and Z).

H

hard disk (HD) A computer component on which data can be written, stored, and retrieved by the means of magnetization.

Hitergent See EcoTergent.

homogeneous immunoassay (HIA) An analytical technique employing antigens and antibodies. An HIA uses assay protocols similar to clinical chemistry without a bound-free separation (for example, latex assays).

Host computer 1. A computer used for overall management and control of the computer network. 2. A clinical laboratory computer that stores and processes patient requests and results. A Host is able to communicate with analytical instruments.

Host communication Data exchange with a clinical laboratory information system (LIS).

Host interface protocol A technical description that defines data transfer between a Host computer and an analytical system.

I

ID reader Typically an optical device that reads the identification code of a patient sample or sample rack (ID) and transfers it to the instrument database.

increased volume rerun A rerun performed after increasing the amount of sample used for the determination.

incubator bath A temperature-controlled, water-filled reservoir that surrounds the reaction cells and keeps the reaction cells at a defined temperature (37°C).

incubator A temperature-controlled aluminum block for AssayCups on cobas and Elecsys instruments.

initial BlankCell procedure The calibration procedure for ECL instruments performed by Roche service representative when setting up an ECL-based analyzer for the first time.

Initialization The operational mode of an analyzer that occurs immediately after power on and during which the instrument prepares itself for operation.

input buffer A section of an analyzer where samples are loaded by using a rack or rack tray. See also *rack loader*.

instrument alarm A displayed alarm that indicates an unusual instrument condition such as an abnormal incubator bath temperature or a mechanical malfunction.

Instrument Manager Typically, PC-based software that controls or supervises one or more analytical instruments.

internal reference solution An internal standard solution, assayed between every ISE sample, that compensates for electronic drift.

inventory control The real-time monitoring of the quantities of all consumable items (liquid and solid) on an analyzer.

ISE check A maintenance function for checking whether electrolyte analysis can be performed correctly.

ISE prime A procedure that fills the ISE reagent lines and syringes with reagent.

K

K factor The reciprocal value of the slope of the calibration curve. A factor used in conversion of absorbance values to concentration values or activities.

L

linear barcode A conventional one-dimensional barcode with limited data capacity.

liquid level detection (LLD) The ability of an analytical instrument to sense liquid by using the sample or reagent probes.

liquid waste container A reservoir for liquid waste generated by an analyzer; its size and location vary between instruments.

loader See rack loader.

loading capacity The maximum number of samples that can be loaded onto the input buffer.

local area network (LAN) A computer network covering a limited area, such as an office or a home.

log file A set of data, typically stored in the control unit, that traces instrument-related or operator-related activities such as maintenance.

lot calibration (L-cal) A calibration when a new lot of reagents is introduced to an analytical instrument and calibrated within 24 hours.

M

maintenance item A maintenance procedure performed by the system or the operator.

maintenance key A button for position movement, used for a probe position check.

maintenance pipe A combination of sequential maintenance items programmed into a fully automated procedure, which can be performed by the analyzer without operator intervention.

maintenance procedure A procedure that must be performed on a regular basis (for example daily, weekly, monthly, or every three months) to secure reliable operation of the analyzer.

manual dilution An off-system, preanalytical step performed by laboratory staff to reduce the analyte concentration in a sample.

manual rerun A retest function. Although a list of samples required for a rerun is created by following data alarms, rerun is not carried out automatically. After organizing the rerun sample list, the operator directs the rerun.

masking A function that temporarily suspends the measurement or calibration of a specific test, depending on the condition of the instrument or reagent. Tests can be masked completely, or just for individual modules or channels. There are two possibilities to mask a test: If T-mask is selected, no patient samples, no controls, and no calibrations can be performed. If P-mask is selected, the test is masked for patient samples only—calibration and QC can be performed. Masking can also be applied to entire modules (module masking) so maintenance can be performed on the masked module while the other modules are still processing samples.

master calibration A reference standardization that uses master test kit reagents and certified reference standard material (for example, World Health Organization reference material) measured at Roche Diagnostics. The resulting reference standard curve, typically using 10 to 12 points, is the basis for the production of in-house master calibrators.

master curve A lot-specific master calibration curve (n=5 or 6) measured at Roche Diagnostics using lot-specific test-kit reagents and master calibrators. The shape of the lot-specific master curve is characterized by a four-parameter Rodbard function. The data characterizing this curve is stored in the lot-specific reagent barcode. Lot-specific, calibrator-assigned values (CalSet-assigned values) are read from the lot-specific master calibration curve and encoded in the CalSet calibrator barcode transfer sheet.

Material Safety Data Sheets Documents that list components of chemical solutions and precautions for the handling and disposal of the solutions.

measuring point Time at which absorbance reading is taken and used to calculate results.

measuring cell A flow-through device that is used to generate light during the ECL detection process.

measuring channel The entire pathway that is passed by the reaction mixture during the ECL measuring cycle (including tubing, heat pipe, measuring cell, photo multiplier, and so on).

measuring range See reportable range.

message In computing, a defined set of alphanumeric data that transfers information from computer to computer or from an analytical instrument to the operator.

microbead Paramagnetic streptavidin-coated microparticles used as the solid phase for heterogeneous immunoassays in ECL systems.

Microcup A secondary sample cup made by Hitachi with a small dead (residual) volume

microbead mixer A paddle or propeller that thoroughly mixes the microbead reagent to ensure resuspension before use.

minimum sample volume The amount of residual sample material plus the volume required for assaying all requested tests to ensure faultless sample aspiration.

minimum signal In ECL assays, a calibration quality criterion. A predefined, assay-specific signal level that must be achieved to establish a valid calibration.

missing value In ECL assays, a calibration quality criterion. All calibrator values must be available for a successful calibration.

mode Defined states of operation of an analyzer.

module An analytical unit that can be combined with others to form larger systems.

monotony of curve A calibration quality criterion. All measured calibrator values must fall in either ascending (sandwich or bridging principle) or descending (competition principle) order for a successful calibration.

multi-wavelength spectrophotometer A spectrophotometer in which detectors are placed at multi-wavelength positions to enable simultaneous light reception.

N

non-barcode mode A mode of instrument operation during which the instrument identifies samples by using the rack and position numbers.

O

on board 1. A technical device or function that is part of the analytical instrument and can be used by the instrument at any time.
2. The availability of reagents and consumables on an analytical instrument for use at any time.

one-way serial processing Sample flow and processing along a single, serial process lane that allows no bypass function and no rerun.

Online Help On-screen documentation that a user can request in a context-sensitive manner and search for any given term.

online support A service that supports the preparation for analysis and maintenance management by exchanging information over networks. See also *cobas TeleService*.

open request An ordered test that has not yet been performed or completed. Results for a sample may be partially available while some tests are not yet completed.

Operate The operational mode during which the instrument processes samples.

operator ID An alphanumeric ID that a system uses to identify a particular operator. There are several levels including operator, supervisor, and administrator.

order Also called a request. A test selected for a specific sample or control.

order date/time A field used to maintain the arrival date and time of an order in the laboratory. The date/time data may be entered manually or transmitted by LIS protocols.

order ID The sample order identification refers to a number of sample tubes (one or more specimen types) of a given patient collected for a panel of different tests. Typically, the sample order identification is printed on order sheets.

output buffer A section of an analyzer to which samples are moved on completion of the analytical process and from which they can be unloaded. See also *rack unloader*.

P

P-mask See Patient mask.

paramagnetic A property of materials that do not exhibit magnetic forces themselves but are capable of becoming magnetic in the presence of a magnetic field. Magnetic property of microbeads used with ECL technology.

patient ID A set of alphanumeric data that unmistakably identifies a particular patient. For example, a social security number and a sample number.

Patient mask There are two possibilities to mask a test: Test mask (T-mask) and Patient mask (P-mask). If T-mask is selected, no patient samples, no controls, and no calibrations can be performed. If P-mask is selected, the test is masked for patient samples only—calibration and QC can be performed.

pending requests See open request.

photometer A device that measures the intensity of light.

photometric assay An assay in which analytes are measured by a photometer.

photometric window A window that enables light to pass from the light source lamp and into the incubator bath.

photomultiplier A light-sensitive tube that collects and amplifies emitted photons from the ECL reaction and converts them into an electric signal.

photon A quantum of electromagnetic energy, having both particle and wave behavior, that carries the light emitted from the ECL reaction.

pinch valve A valve that pinches the suction tube and switches the flow path.

piercer A punch on the reagent transfer arm that pierces the reagent bottle seals during cassette preparation.

pipe See maintenance pipe.

pipetter A device used for pipetting (aspirating and dispensing) a fixed amount of sample or reagent from a sample or reagent container to reaction vessel.

plunger A rod that connects with the drive arm and moves up or down, depending on the pipetting amount.

post-analytical The sample management process, typically storage and archiving, after results have been reported.

potentiometric assay An assay in which analytes (for example Na, K, or Cl) are measured in millivolts by ion-selective electrodes.

Power Up The system status while it is loading programs, performing self-checks, and so on.

pre-analytical The sample management process before the analytical phase. Preanalytical processing typically involves actions such as sorting and aliquoting.

precision The closeness of agreement between independent test results obtained under prescribed conditions.

PreClean A phosphate buffer used to wash and resuspend the microbeads during the pre-wash step.

pre-dilution A dilution step performed before samples are analytically processed on the analyzer.

preventive action A series of actions, suggested by the system, that the operator should perform before daily operation to ensure sufficient inventory during the day (for example, the replenishment of reagents and consumables).

Pre-wash dispenser A technical device that dispenses PreClean into the AssayCups in the Pre-wash station.

Pre-wash sipper Sipper of the PreClean station, which aspirates reaction mixture and PreClean solution from AssayCups.

primary tube The original tube containing the sample that has been drawn from the patient.

ProbeWash An auxiliary reagent used to wash the reagent probe during special wash steps.

ProCell An auxiliary reagent that transports the reaction mixture from an AssayCup into the measuring cell and aids the ECL detection technology.

processing lane The section of an analytical module where sample racks are moved for pipetting.

profile A user-defined set of test requests.

protocol 1. A convention or standard that controls or enables the connection, communication, and data transfer between two computing end points. Protocols can be implemented by hardware, software, or a combination of the two.
2. A set of rules that guides how an activity should be performed.

prozone The antigen/antibody complex formation is predictable as long as an excess of reagent (antibody) exists. However, in patient samples with very high levels of antigen, the reaction may begin to reverse (deagglutination) because of the effect of the excess antigen. This is called a prozone effect, and without checking for this phenomenon, abnormally high samples may give incorrect or even false normal results. There are two prozone check methods available: Antigen readdition method and reaction rate method.

Q

QC error An alarm generated in realtime QC when either a low value or a high value exceeds the limit of 3SD (QC error 1) or 2.5 SD (QC error 2).

qualitative assay An assay that does not allow the determination of the concentration of an analyte, but yields a classification of the sample, such as reactive/nonreactive or positive/negative, with regard to a certain analyte.

quantitative assay An assay that allows the determination of the quantity (concentration or activity) of an analyte.

query download A communication process between instrument PC and LIS by which a predefined data set is transmitted upon request of the analytical instrument.

R

rack A sample carrier device that holds sample cups or primary sample tubes (including those for routine samples, standard and washing solutions, quality control, STAT, and rerun samples). The rack enables easy transportation on analytical systems and modules. Different rack types can be distinguished by their differing colors.

rack ID A barcode (one-dimensional or binary) at the end of the rack that unmistakably identifies the rack.

rack loader Area where the sample racks to be measured are set. 15 racks can be placed on the rack tray and 15 racks on the input buffer.

rack pusher arm An arm, located on the loader, for pushing racks.

rack rotor A device that performs the rotation movement of the sample rack from the rack feed unit, or STAT sample inlet, to the conveyance position on the sample line. The structure can hold up to twenty racks waiting for rerun or for automatic QC.

rack tray A device for carrying and handling racks. It holds up to 15 racks and is placed directly in the rack loader or unloader of the analyzer.

rack unloader Area that holds the sample racks whose measurements have completed. Fifteen racks can be stored on the rack tray and 15 racks on the output buffer.

random access The ability of an analytical instrument to process requests from a patient sample in any order.

rate assay A determination in which measurements are taken as the reaction proceeds. The rate of the reaction is proportional to the sample component being analyzed. Also known as a kinetic assay.

raw data The unprocessed values obtained during the analytical process on an instrument (for example mVolt or absorbance).

reaction bath See also *incubator bath*.

reaction cell A plastic cuvette into which sample and reagents are pipetted for the chemical or immunological reactions.

reaction disk A rotatable disk that holds the reusable reaction cells used for photometric measurement.

reagent cap open/close mechanism A mechanism that prevents evaporation by automatically opening and closing the **cobas e** pack caps before and after reagent pipetting or operation.

reagent compartment A temperature-controlled section on an analyzer that holds reagents and diluents.

reagent disk The device in the reagent compartment into which the **cobas c** packs or **cobas e** packs are placed.

reagent mask A function that automatically stops analysis of the current test when a required reagent (cobas c pack or cobas e pack) is empty or not present on the system. A red bar appears on the test key in the test selection screen.

reagent pack A complete set of physically combined and ready-to-use reagent bottles for Elecsys assays. The components of a reagent pack cannot be interchanged with another reagent pack. See also *cassette*, *cobas c pack*, and *cobas e pack*.

reagent pack calibration (R-cal) The calibration performed when a reagent has been on board the analyzer more than 24 hours. A reagent pack calibration is valid for one specific reagent pack only.

reagent pack number A unique number on the reagent bottle label that identifies each reagent pack.

reagent probe Probe used to transfer reagents from the reagent bottles to the reaction cells.

reagent probe rinse station An area located between the reagent disks and reaction disk where reagent probes are rinsed both internally and externally with water.

reagent scan A scan of the reagent disk to read information from the reagent barcode into the analyzer and to update the inventory.

real time The display of information on the monitor at the very moment a change to such information occurs.

realtime QC Real-time quality control. A method in which two quality control samples of low and high values are measured, the quantitative values are judged in real time, and an alarm is generated if necessary.

recalibration The repetition of a calibration.

reference electrode 1. Electrode through which the reference solution flows to provide a reference potential for ISE measurements (also called reference cartridge). 2. A part of the measuring cell used to control the electrochemical process of the ECL reaction.

reference range See *expected range*.

reference solution A KCl solution aspirated through the ISE reference cartridge. Also know as the REF, ISE Ref. or reference electrode solution. See reference electrode (1.).

reflex testing A request for additional testing based on customer-defined algorithms or rules and previous test results.

repeat limit A user-definable limit at which a test is run again under unchanged conditions.

reportable range The range of results that can be reported for the assay. It stretches from the lower detection limit to the high end of the calibration curve.

request See order.

rerun The performance of the same test on a sample again under the same or changed conditions.

rerun – concentrated The performance of the same test with a less diluted sample, either by decreasing the diluent or by increasing the sample volume.

Reset Operational mode during which the analyzer sets and aligns all mechanical parts to their home positions.

Result Date/Time The instrument fills the result date and time after the result calculation is finished. It may be maintained by work area management systems for information purpose.

rinse bath See rinse station.

rinse nozzle A nozzle that supplies or drains detergent or water used for rinsing reaction cells.

rinse station A technical device that cleans probes or disposable tips with deionized water or cleaning solutions to avoid contamination and carryover.

Rodbard function A mathematical function used to convert measured signals into concentrations. It uses four parameters to define the shape and position of calibration curves.

S

S.Stop Abbreviation for sampling stop. A system operating mode in which no new samples are pipetted, but samples already pipetted will be completed without interruption or loss.

S1Abs The absorbance of standard solution 1. The displayed value is 10 000 times greater than the actual measured absorbance.

sample blank The absorbance of the sample plus reagent 1 of a photometric test. The sample blank is subtracted from the actual absorbance reading to obtain the absorbance value relevant for the result calculation.

sample cup A small container that is used for samples and also for calibrator and control material. A sample cup can be placed either on specific racks, other inserts, or on sample tubes. Compared to a sample tube, a sample cup allows the use of smaller liquid volumes and so reduces the dead volume.

sample ID A set of alphanumeric data that unmistakably identifies a particular sample. See also *patient ID*.

sample probe Pipetter probe used to transfer sample material from sample containers to reaction cells.

sample rack See rack.

sample tray See rack tray.

sample tube A glass or plastic container for liquid samples to be used with the system. It may or may not have a barcode label, which may be used for positive sample identification. A sample tube contains sample of one specific specimen (sample) type.

sample type One of four types of sample that can be analyzed: serum/plasma, urine, cerebrospinal fluid (CSF), or supernatant. The sample volume and normal value are settable for each type.

sampling stop An instrument alarm level that indicates a problem with the sampling system. See also *S.Stop*.

sandwich principle One of three test principles that can be applied to ECL immunoassays. It is used to detect higher molecular weight analytes, such as TSH. See also *bridging principle*, *competitive principle*.

secondary tube A sample container of variable size into which aliquots are transferred

sequence number A number automatically assigned to each sample by the analyzer and used to track samples and orders.

serum index A function by which the absorbance characteristics of the samples are described to assess the presence of lipemic, hemolysis, and icterus.

serum work area (SWA) The section of a clinical laboratory where all CC, HIA, and HetIA tests (including preanalytical and postanalytical work) are processed.

Service System status that is required to perform a maintenance action. See maintenance item, maintenance procedure.

shutter A door, located on the lid of the reagent disk, that is used to load and unload cobas c packs (reagent cassettes).

sipper A device to aspirate liquid from a vessel into a flow path, for example, ISE measuring flow path. In ECL systems, a device that aspirates the reaction mixture out of the AssayCup as well as ProCell and CleanCell from their reservoirs into the measuring cell.

Sleep mode Also called sleeping. A mechanical and electrical status of an analytical instrument during which no immediate processing can be initiated by the operator.

SMS Selective Mode Solution. SMS is an acidic wash solution which is applied for special washes of reagent probes and reaction cells on the **c** 501 module.

slider A device for raising and lowering the aspiration nozzles from the ProCell and CleanCell bottles.

solid waste container A metal waste container holding a liner that collects discarded solid waste.

standard Traceable reference material used to create a (master) calibration curve. Also referred to as calibrator.

standard deviation A statistic used as a measure of the dispersion or variation in a distribution of data.

standard rack A standardized transportation device for a maximum of five sample containers on Roche Diagnostics/Hitachi High-Technologies instruments.

Stand by An operational mode of the analyzer during which power is on but no sample analysis or maintenance procedures are being performed.

stand by reagent QC The measurement of a quality control sample from a reagent that is on board the analyzer but not presently in use for routine testing.

Start up An operational mode of an analyzer, following power-on, during which the instrument prepares itself for operation.

STAT application A special test application (for example, reduced incubation time) for STAT or emergency samples to achieve faster result reporting.

STAT port Special entry area for STAT samples, which will be processed with priority.

STAT sample Emergency sample. Results should be available within shortest possible time.

SysClean An auxiliary reagent used for the periodic cleaning of the measuring cell.

system cleaning solution See wash solution.

system error 1. A calibration quality criterion that originates from a hardware failure while a calibration measurement is performed.
2. The general term for a case of instrument-related problems.

systematic error An error that is generated by a cause giving deviation to measured values. An alarm generated when control of a low value or a high value is changed in the same direction in realtime quality control.

SysWash A system-specific agent used to avoid reagent carryover. It also prevents bacterial growth.

T

T-mask See Test mask.

target range The allowed range of recovery for an analyte in a control material.

target value The mean of all participant responses after removal of outlying values.

technical limit The dynamic range of an assay.

test code The abbreviated name for a test. This code is displayed on test buttons shown on software screens or windows.

Test mask There are two possibilities to mask a test: Test mask (T-mask) and Patient mask (P-mask). If T-mask is selected, no patient samples, no controls, and no calibrations can be performed. If P-mask is selected, the test is masked for patient samples only—calibration and QC can be performed.

test principle A technique that serves as the basis for designing an assay to detect or quantify analytes.

test protocol The sequence of test steps used to perform an assay (for example, volumes and timings).

ticket master A part of the instrument software that controls the flow of racks on the analyzer.

timeout calibration An instrument mode that automatically generates a calibration request after a predefined interval.

timeout QC A function that measures the quality control sample for the specified item at certain time intervals.

tip See AssayTip.

tip eject station An opening in the instrument housing through which AssayCups and AssayTips are discarded.

tray indication light A light, at the front of the rack loader and unloader that indicates the mode of operation.

tripropylamine (TPA) One of two electrochemically active substances used in the ECL reaction.

turn-around-time 1. The time between the decision to perform a test and the time when the doctor receives the result and can act on it.
2. Inside the laboratory (Lab-TAT): Time between receiving a sample and sending out the validated result.

U

ultrasonic mixer A mechanical unit, in a waterproof pack, that generates ultrasound used to stir samples.

unloader An unloader holds sample racks after the completion of the analytical process.

upload The process of sending data to Roche by a network link.

V

validation The process of checking results or data against defined rules or ranges in clinical laboratories. Validation can be against technical or clinical criteria.

W

wash solution 1. A solution used to wash reaction cells. The unused solution is stored in a detergent bottle in the instrument.
2. A solution used to wash the reagent probes as specified in the **Utility** > **Special Wash** screen.

waste solution reservoir Container that collects reaction waste.

water level sensor A sensor that monitors the water level of temperature-controlled water.

water supply tank A tank used to store ion-exchanged water.

water supply tube A tube for connecting a water supply tank and an analyzer.

workarea consolidation The combination of separate workstations to produce one physical or logical workarea in a laboratory. This combination can be achieved through mechanics (a conveyor, for example), facilitated sample transfer (racks or trays), and data management.

Index

F

Index

Symbols

< >Test (data alarm)
– ISE unit, D–19
<Sig (data alarm)
– e 601 module, D–50
<SigL (data alarm)
– e 601 module, D–40
>AB (data alarm), D–32
>Curr (data alarm)
– e 601 module, D–35
>Cuvet (data alarm)
– photometric unit, D–24
>I.H (data alarm)
– photometric unit, D–15, D–26
>Index (data alarm)
– photometric unit, D–15, D–25
>Kin (data error)
– photometric unit, D–26
>Lin (data alarm)
– photometric unit, D–27
>Proz (data alarm)
– photometric unit, D–28
>React (data alarm)
– photometric unit, D–29
>Rept / <Rept (data alarm)
– photometric unit, D–29
>Rept/ <Rept (data alarm)
– e 601 module, D–38
>Rept/<Rept (data alarm)
– ISE unit, D–18
>Sig (data alarm)
– e 601 module, D–50
>Test /<Test (data alarm)
– photometric unit, D–31
>Test/ <Test (data alarm)
– ISE unit, D–19
>Test/<Test (data alarm)
– e 601 module, D–41

Numerics

3rd Results Acceptance, B–284

A

AB level (e 601 module)
– check error, D–32
– range over, D–32
AB.E (data alarm)
– e 601 module, D–32
Abnormal conditions, during operation, A–20
Abs (data alarm)
– photometric unit, D–21
Accumulation
– QC results, B–203, B–219
Activate
– controls, B–231
– tests, B–231
ADC.E (data alarm)
– e 601 module, D–32
– ISE unit, D–12
– photometric unit, D–22
Alarm
– alarm indication, D–7
– alarm levels, D–7
– calibrations, D–43
– checking, B–38
– data alarm list, D–10
– data alarms, D–3
– problems without alarm, D–60
– screen, B–38
Analysis
– flow of ISE analysis, A–96
– flow of photometric analysis, A–86
Analyzer
– modules overview, A–36
– safety labels, A–22
– sample tracking, B–103
– shutdown, B–78
– shutdown, sleep mode, B–79
– start, B–34, B–35
– start, automatic, B–36
– start, manual, B–37
Application, B–255
– auto masking, B–269
– automatic rerun, B–275
– installing, B–256
– overview, B–255
– reagents for e 601 module, B–119
– reagents for ISE unit, B–109
– reagents for photometric unit, B–113
– report name, B–275
– technical limit, B–276
– troubleshooting, D–67
– updating, B–262
Application data, A–50
– installation process, A–50
Application parameters
– description, B–264
– description, Analyze tab, B–265
– description, Calib. tab, B–267
– description, Range tab, B–271

Application settings
– auto masking, e 601 module, B–269
– automatic rerun, e 601 module, B–275
– calibration timeouts, e 601 module, B–270
– dilution rations, e 601 module, B–266
– duplicate limit, e 601 module, B–268
– expected values, B–278
– qualitative fields, c 501 module, B–277
– repeat limit, B–276
– report name, e 601 module, B–275
– technical limit, c 501 module, B–276
– unit of measure, change after calibration, e 601 module, B–273
Approved parts, A–8
Archive
– saving patient data, B–96
– saving system parameters, B–314
Aspiration tube
– clean, e 601 module, C–147
Assay tip buffer station, e 601 module, A–108
AssayCup, replace, B–145
AssayTip, replace, B–145
Assigning
– calibrator positions, B–182
– QC racks and positions, B–223
– rerun rack manually, B–92
– tests or profiles to test keys, B–285
– tests to e 601 module, B–292, B–293
– tests to module, B–292
Auto masking
– Utility,Application screen, B–269
Automatic power ON, B–36
Automatic QC, B–202
– configuration, B–232
– configuring measurement, B–232
Automatic rerun, B–71, B–275
Auxiliary reagents
– c 501 module, ISE applications, B–109
– c 501 module, photometric applications, B–113
– e 601 module, A–110, B–119

B

Background maintenance, C–34, C–36, C–37
Backup
– function, A–49, A–51
– patient data, B–96
– system parameters, B–314
Backup operation, B–244
– activating backup operation mode, B–244
– measuring samples in backup operation mode, B–246
backup wait for rack setting
– status, B–237
Barcode
– barcode mode, B–84, B–205
– non-barcode mode, B–84, B–205
– rack barcodes, A–118
– read error, B–91
– sample barcodes, A–118
– types, A–118
Barcode reader
– c 501 module, for c pack, A–79
– e 601 module, A–102
– rack sampler, A–55
– safety information, A–30
Basics, software, B–3
Bath detergent, A–83
Beadmixer
– See, microbead mixer.
Biased result, D–82
– enzyme results, D–85
– photometric unit, troubleshooting, D–82
Biohazardous materials, A–9
Bubbles in syringes, D–73
Buttons, B–10
– calibration and QC select, B–55
– daily maintenance, B–47
– global, B–12
– maintenance, B–288
– parameter download, B–62
– pipe setting, B–288
– power up pipe, B–288
– rack delivery, B–288
– reagent overview, B–129, B–146
– reagent preparing, B–48
– sample data clear, B–48
– sample tracking, B–64
– standard, B–11

C

c 501 module, A–69
– assign test, B–292
– auxiliary reagents, ISE applications, B–109
– auxiliary reagents, photometric applications, B–113
– barcode reader, c pack, A–79
– c pack, loading and unloading, B–132
– c pack, unloading and reloading, B–114
– c pack, volume control, B–114, B–121
– calibration concept, B–162
– components, A–72
– extended power OFF, C–115
– front door, A–90
– inactivating, B–294
– ISE unit, A–40, A–93, B–49
– maintenance schedule, C–69
– module overview, A–39, A–71
– operator-related reagent management, B–129
– photometric unit, A–39, A–83, B–53
– photometric unit, wavelengths, A–124
– reaction bath, A–82
– reaction cell rinse units, A–84

– reaction disk, A–81
– reaction monitoring, A–89
– reaction system, specifications, A–123
– reagent concept, B–109
– reagent dispensing system, A–77
– reagent management system, A–79
– reagent overview, B–146
– reagent probe, A–77
– reagent probes, location, A–77
– reagent storage compartment, A–76
– reagent syringes, A–78
– reagent system, A–76
– reagent system, specifications, A–124
– reagent, replace, B–136
– reagents, B–116
– rear view, A–92
– rinse station, ISE unit, A–95
– rinse station, reagent probe, A–78
– rinse station, sample probe, A–75
– sample probe, A–74
– sample syringe, A–75
– sampling system, A–74
– sampling system, specifications, A–123
– special wash, programming, B–301
– specifications, A–123
– stirrer units, A–82
– system characteristics, A–71
– troubleshooting, D–74, D–79
– vacuum system, A–91
c 501 module maintenance
– as needed, C–110
– daily, C–72
– every six months, C–105
– every three months, C–102
– monthly, C–88
– periodic replacement, C–71
– weekly, C–81
c pack
– calibration, B–165
– disposal, A–80
– load, B–53, B–132
– loading port, A–79
– registration, B–114, B–121
– reload, B–114
– unload, B–114, B–132
– volume control, B–114, B–121
c 501 (ISE unit)
– data alarm, D–12
c 501 (photometric unit)
– data alarm, D–20
Cal.E (Calib flag)
– ISE unit, D–44
Cal.E (Sample flag)
– e 601 module, D–33
– ISE unit, data alarms, D–13
– photometric unit, D–23
Calc.? (data alarm)
– e 601 module, D–32
– ISE unit, D–13
– photometric unit, D–22
Calculated test
– data alarm (photometric unit), D–22
– data alarm, ISE unit, D–13
– deleting formula, B–298
– editing formula, B–296
– programming, B–295
Calculation
– not possible, e 601 module, D–32
– not possible, ISE unit, D–13
Calibration
– alarm list, D–43
– auto calibration, B–269
– automatic, B–160
– c pack, B–165
– calibrators for e 601 module, B–127
– calibrators for photometric unit, B–115
– cancelling calibrations manually, B–171
– cannot be performed, e 601 module, D–88
– checking calibrations of e 601 tests, B–178
– checking calibrations of ISE tests, B–177
– checking calibrations of photometric tests, B–173
– checking results, B–61
– concept, B–159, B–201
– concept, c 501 module, B–162
– concept, e 601 module, B–166
– concept, ISE unit, B–163
– e pack, B–167
– edit concentration values, B–193
– factors, B–180
– ISE unit, B–197
– loading calibrator data, B–188
– loading calibrators, B–59
– loading vials, B–184
– lot, c 501 module, B–165
– lot, e 601 module, B–167
– masking, B–169
– measuring calibrators, B–60
– not released, e 601 module, D–88
– overview over calibration menu, B–170, B–206
– printing load list, B–56
– QC after calibration, B–203
– quality criteria, e 601 module, B–168
– request, B–57
– requesting calibrations manually, B–171
– review data, B–173
– review measurement details of the most recent calibration, B–175
– review results of previous calibrations, B–176, B–179
– review results of previous ISE calibrations, B–178
– rules, c 501 module, B–162
– rules, e 601 module, B–166
– select button, B–55

– selecting tests for start-up calibration, B–181
– software screen, B–27
– test points, D–84
– tests during operation, B–198
– timeouts, B–270
– troubleshooting, e 601 module, D–88
– validating, B–61
Calibration and QC Load List
– load calibrators and controls, B–59
– printing, B–57
Calibration and QC Select, operation, B–55
Calibration calibrator screen, B–182
Calibration error
– e 601 module, D–33
– ISE unit, D–44
Calibration failure data
– ISE unit, D–13
– photometric unit, D–23
Calibration install screen, B–185
Calibration menu
– calibration calibrator screen, B–182
– calibration install screen, B–185
– calibration status screen, B–170
Calibration status screen, B–170
Calibrator
– assign positions, B–182
– checking information
about installed calibrators, B–186
– loading, B–59
– loading data, B–188
– loading vials, B–184
– measuring, B–60
Calibrator data, A–50
Calibrators and controls
– e 601 module, B–127
– photometric unit, B–115
Calling
– Roche service representative, D–68
Cap open/close mechanism, A–102
CarOvr (data alarm)
– e 601 module, D–34
Carriage, A–108
Carryover
– CarOvr (data alarm), D–34
– evasion, B–301
Cartridge
– measurement, A–95
– reference, A–95
Cassette
– disposal, A–79
– loading port, A–79
– table, A–79
Cassette*see also* c pack
CD drive, computer components, A–45
Cell blank
– abnormal (data alarm), D–24
Cell cover
– clean the cell covers, C–83
Cell rinse nozzles
– replace nozzle tips, C–110
Cell wash
– c 501 module, B–304
– programming, c 501 module, B–304
– washing reaction cell, c 501 module, B–304
Cell.T (data alarm)
– e 601 module, D–34
Check boxes, B–9
Checking
– abnormal sound, A–20
– alarms, B–38
– calibration and QC results, B–61
– calibration factors, B–180
– calibrations of e 601 tests, B–178
– calibrations of ISE tests, B–177
– calibrations of photometric tests, B–173
– information about installed calibrators, B–186
– results, B–74
– water leakages, A–20
Chemistry, troubleshooting, D–68
Chloride
– ion-selective electrode, A–95
– low value, D–77
ClcT.E (data alarm)
– ISE unit, D–13
– photometric unit, D–22
CleanCell
– bottles, A–111
– clean aspiration tubes, C–147
– clean nozzles, C–125
– clean stand, C–147
– replace reservoir, C–125
– replace trouble, D–86
– replace when empty, B–137
– replace when not empty, B–140
Cleaning (c 501 module)
see Maintenance works (c 501 module)
Cleaning (core unit) *see* Maintenance works (cu 150)
Cleaning (e 601 module)
see Maintenance works (e 601 module)
Cleaning solution
– c 501 module, A–91
– e 601 module, A–110
Clot detection, A–103
Clot.E (data alarm)
– e 601 module, D–34
CmpT.? (data alarm)
– ISE unit, D–14
– photometric unit, D–23
CmpT.E (data alarm)
– ISE unit, D–14
– photometric unit, D–23
cobas c pack, B–113

cobas e pack, B–119
cobas link
– backup function, A–49, A–51
– e-barcodes, A–49
– e-barcodes,application data, A–50
– e-library, A–48
– e-package inserts, A–49, A–51
– main funktions, A–49
– Overview, A–47
– PC, A–48
– working with **cobas** link functions, A–50
Color scheme
– module overview area, B–43
– status colors, B–6
– Status line, B–41
– test matrix, B–86
– Work Flow Guide area, B–41
Commissioning, A–6
Compensated test
– formula deleting, B–300
– formula editing, B–300
– programming, B–299
Compensation error
– calculation error, ISE unit, D–14
– calculation error, photometric unit, D–23
– data error, ISE unit, D–14
– data error, photometic unit, D–23
Components
– c 501 module, A–72
– consumables area, e 601 module, A–107
– control unit, A–45
– control unit computer, A–45
– core unit, A–52
– e 601 module, A–100
– ISE unit, c 501 module, A–93
– keyboard, A–46
– measuring area, e 601 module, A–103
– mouse, A–46
– PreClean area, e 601 module, A–105
– printer, A–46
– reaction disk, c 501 module, A–81
– reagent area, e 601 module, A–101
– reagent dispensing system, c 501 module, A–77
– reagent probe rinse station, c 501 module, A–78
– reagent system, c 501 module, A–76
– sample pipetter, c 501 module, A–74
– sample probe rinse station, c 501 module, A–75
– sample syringe, c 501 module, A–75
– sampling system, c 501 module, A–74
– touchsreen monitor, A–46
Computer
– CD drive, A–45
– control unit components, A–45
– hard disk, A–45
– keyboard, A–46
– mouse, A–46
– printer, A–46
– touchscreen monitor, A–46
– troubleshooting, D–67
Concentrated waste tank, C–50
Concept
– calibration concept, B–159, B–201
– calibration concept, c 501 module, B–162
– calibration concept, e 601 module, B–166
– calibration concept, ISE unit, B–163
Cond.E (data alarm)
– ISE unit, D–44
Conditioning error, D–44
Conditions
– environmental, A–117
– for system operation, A–116
Configuration
– immunological tests, B–255
– Module Set, B–291
– photometric tests, B–255
– report format, B–310
– system configuration, B–281
Configuring
– automatic QC measurement, B–232
– realtime QC, B–219
Consumables
– area, e 601 module, A–107
– replace, e 601 module, B–144
Container, sample, A–66, A–120
Control
– checking results, B–61
– loading, B–59
– measuring, B–60
– request, B–57
– troubleshooting, photometric unit, D–83
– validating, B–61
Control data, A–50
– load, B–225
Control unit, A–45
– components, A–45
– computer, A–45
– module overview, A–37
– monitor, A–46
– mouse, A–46
– printer, A–46
Controls
– activate tests, B–231
– data alarm, D–55
– edit values, B–228
– reassign control values, B–229
– recovery, e 601 module, D–92
Cooling fans
– clean the cooling fan, C–60
Core unit, A–52, A–122
– barcode reader, A–55
– components, A–52
– cooling fan, C–60

– maintenance schedule, C–49
– module overview, A–38
– power switches, A–56
– rack loader, unloader, A–54
– rack rotor, A–58
– rack sampler, A–53
– specifications, A–122
– STAT port, A–55
– water supply, A–57
Core unit maintenance
– as needed, C–61
– daily, C–50
– every six months, C–58
– monthly, C–53
Cover
– reagent disk, e 601 module, D–86
cu 150 *see* Core unit
Cumulative QC, B–201
Cup, A–59
– sample, A–66
– See, AssayCup.
Curr.E (data alarm)
– e 601 module, D–35
Customizing
– patient report, B–310

D

Daily maintenance button, B–47
Daily operation *see* Operation
Data
– accumulation of QC results, B–203
– archive patient data, B–96
– calibration, B–173
– load control data, B–225
– loading calibrator data, B–188
– patient, archiving, B–96
– result, drifting, D–60
– result, high level, D–61
– result, low level, D–61
Data alarms, D–3
– 501 (ISE unit), D–12
– 501 (photometric unit), D–20
– all listed, D–10
– e 601 module, D–32
– for controls, D–55
– introduction, D–7
Data loss, A–18
Data monitor
– comparison of
  data monitor format and report format, B–313
– customazing patient reports, B–310
– report, monitor format, B–313
– report, report format, B–313
Data Print, operation, B–76
Data problems, D–60
Data problems without alarms, D–60
Data Review screen
– sample selection list, B–94, B–101
– test results list, B–95, B–102
Data review screen, B–93, B–101
Data security, A–18
Decommissioning, A–6
Decreased sample concentration, D–63
Deleting
– calculated test formula, B–298
– compensated test formula, B–300
– rerun rack manually, B–92
Description
– application parameters, B–264
– application parameters, Analyze tab, B–265
– application parameters, Calib. tab, B–267
– application parameters, Range tab, B–271
Det.S (data alarm)
– photometric unit, D–25
Deviation
– method comparison, D–94
– module to module variance, e 601 module, D–93
Diff.E (data alarm)
– e 601 module, D–45
Diluents
– c 501 module, B–115
– e 601 module, B–125
Diluted sample
– automatic dilutions, B–73
– dilution from Host, B–73
– manual dilutions, B–73
– rerun, B–72
Dilution
– automatic, B–73
– from Host, B–73
– manual, B–73
– prediluted sample, B–73
– ratios, e 601 module, B–266
Dimensions, module, A–115
Direct Help, B–23
Dispenser
– PreClean area, e 601 module, A–105
Disposal
– c pack, A–80
– Instrument, A–32
– of the analyzer, A–6
– openings, e 601 module, A–108
Download
– application data, A–50
– calibration data, A–50
– control data, A–50
– e-barcodes, A–49
– parameter, B–62
– test selection, B–66
Downloading
– application parameter, B–259

Drift, troubleshooting, e 601 module, D–87
Dup.E (data alarm)
– e 601 module, D–46
– photometric unit, D–45
Duplicate error
– e 601 module, D–46
– photometric unit, D–45
Duplicate limit
– defining, e 601 module, B–268
– Dup.E data alarm, c 501 module, D–45
– Dup.E data alarm, e 601 module, D–46
DVD
– Finalizing a DVD disk, B–250
– Formatting a DVD disk, B–249
– Preparing a DVD disk, B–248

E

e 601 module, A–97
– assign test, B–292
– auxiliary reagents, A–110, B–119
– calibration concept, B–166
– calibrators and controls, B–127
– checking calibrations of e 601 tests, B–178
– components, A–100
– consumables area, A–107
– consumables, replace, B–144
– data alarms, D–32
– diluents, B–125
– dilution ratios, B–266
– drift troubleshooting, D–87
– duplicate limit, B–268
– e pack, B–120, B–123, B–125
– ECL unit, specifications, A–127
– erratic results, D–87
– extended power OFF, C–156
– finalization, C–155
– green indicator lamp, A–109
– gripper, A–108
– inactivating, B–294
– incubator disk, A–104
– inventory update, B–156
– magazine lifter, A–108
– magazine waste compartment, A–109, C–153
– maintenance schedule, C–121
– measuring area, A–103
– measuring cell, A–104
– method comparison, D–94
– microbead mixer, A–102
– module overview, A–40, A–99
– module to module variance, D–93
– PreClean area components, A–105
– PreClean bottles, A–110, A–111
– ProbeWash station, A–102
– reaction system, specifications, A–126
– reagent area, A–101
– reagent concept, B–119
– reagent disk, A–102
– reagent overview, B–152
– reagent probe, A–102
– reagent reloading, B–133
– reagent syringe, A–102
– reagent system, specifications, A–127
– reagent, replace, B–137
– reagents, B–127
– replace reagents, B–54
– rinse station, microbead mixer, A–101
– rinse station, PreClean area, A–105
– rinse station, reagent probe, A–101
– rinse station, sample probe, A–103
– rinse station, sipper probe, A–103
– sample probe, A–103
– sample syringe, A–104
– sampling system, specifications, A–126
– sipper probes, A–104
– sipper syringes, A–104
– solid waste, B–144
– solid waste container, A–109
– solid waste, empty, B–145
– special wash, programming, B–308
– specifications, A–126
– system characteristics, A–99
– troubleshooting, D–86
– troubleshooting calibration, D–88
– vortex mixing station, A–108
e 601 module maintenance
– as needed, C–147
– daily, C–122
– every two weeks, C–141
– three months, C–144
– weekly, C–125
e pack, B–120, B–123, B–125
– calibration, B–167
– reload reagent, B–133
e-barcodes, A–49
– application data, A–50
– calibrator data, A–50
– control data, A–50
ECL unit
– specifications, A–127
EcoTergent, A–83
Edited (data alarm)
– e 601 module, D–35
– ISE unit, D–14
– photometric unit, D–25
Editing
– calculated test formula, B–296
– compensated test formula, B–300
– concentration values, B–193
– control values, B–228
– maintenance pipes, C–11
– maintenance types, C–19

Electrical safety, A–11
Electrical supply
– power not available, D–71
e-library, A–48
– e-barcodes, A–49
– e-package inserts, A–49, A–51
Empty solid waste
– e 601 module, B–145
Environmental conditions, A–7, A–117
e-package inserts, A–49, A–51
Erratic result
– e 601 module, D–87
– ISE unit, D–74
– photometric unit, troubleshooting, D–80, D–82
Erroneous operation, D–60
Error
– barcode read error, B–91
– calibration, e 601 module, D–33
– calibration, ISE unit, D–44
– QC error 1, D–56
– QC error 2, D–57
– random error, realtime QC, D–57
Expected values
– changing, B–278
Extended power OFF, C–115, C–156

F

F1 Help
– See, Online Help
Favorite tab
– Online Help, B–22
Filters
– circuit board rack filter, c 501 module, C–100
– detergent aspiration filter, c 501 module, C–98
– KCl aspiration filter, c 501 module, C–88
– power supply filter, c 501 module, C–100
– rack sampler unit, C–57
– radiator filter, c 501 module, C–100
– water filter, C–58
Finalization, e 601 module, C–155
Finalizing a DVD disk, B–250
Firewall, A–18
Flow path
– cleaning, c 501 module, C–73
– cleaning, e 601 module, C–141
Formatting a DVD disk, B–249
Front doors
– c 501 module, A–90
Functions
– backup, A–49, A–51
– working with **cobas** link, A–50

G

General maintenance, C–3
Global buttons, B–12
Green indicator lamp, e 601 module, A–109
Gripper
– e 601 module, A–108
– PreClean area, e 601 module, A–105
Guidance prompt, B–7

H

Hacker attack, A–18
Hard disk
– control unit components, A–45
– saving space on, B–48
Help
– See, Online Help.
High level
– result data, D–61
High result, photometric unit, D–79
High value
– ISE internal standard, D–76
– sodium, D–77
Host interface, A–117

I

Immunoassay, troubleshooting, D–69
Immunological tests
– configuration, B–255
Inactivating
– module, B–294
Inc.T (data alarm)
– e 601 module, D–36
Increased sample concentration, D–63
Incubator
– Bath detergent, A–83
– clean, e 601 module, C–132
– e 601 module, A–104
– temperature, data alarm, D–36
Incubator bath
– clean the incubator bath, c 501 module, C–92
Indicator lamp
– green, e 601 module, A–109
Individual and cumulative QC, B–201
Initialize
– status, B–237
Insoluble contaminants in sample, A–14
Inspection
– before start, B–34
Installation, A–6
– of the analyzer, A–6
Instrument
– care, C–23
– clean surfaces, cu 150 module, C–61

– clean surfaces, e 601 module, C–114, C–154
– covers, A–10
– troubleshooting, D–69, D–70
Instrument care
– automating with maintenance pipes, C–32
Instrument status, B–237
– during maintenance, C–6
Insufficient PreClean, D–42
Insufficient reagent alarm
– e 601 module, D–37
– ISE unit, D–17
Inter assay precision
– e 601 module channels, D–93
Interface
– Host, A–117
– user interface, general description, B–5
Internal standard
– high/low values, D–76
Intra assay precision
– e 601 module, D–92
Introduction
– data alarms, D–7
Inventory update, e 601 module, B–156
IS bath, A–94
– clean IS bath, C–87
– remove IS bath, C–87
ISE Ref.
– clean aspiration filter, C–88
ISE unit
– calibration, B–197
– calibration alarm, Cal.E, D–44
– calibration alarm, Cond.E, D–44
– calibration alarm, IStd.E, D–46
– calibration alarm, Prep.E, D–47
– calibration alarm, Rsp1.E, D–48
– calibration alarm, Rsp2.E, D–48
– calibration alarm, Slop.E, D–51
– calibration concept, B–163
– checking calibrations of ISE tests, B–177
– components, A–93
– data alarm, < >Test, D–19
– data alarm, >Rept/<Rept, D–18
– data alarm, >Test/<Test, D–19
– data alarm, ADC.E, D–12
– data alarm, Cal.E, D–13
– data alarm, Calc.?, D–13
– data alarm, ClcT.E, D–13
– data alarm, CmpT.?, D–14
– data alarm, CmpT.E, D–14
– data alarm, Edited, D–14
– data alarm, ISE.E, D–16
– data alarm, ISE.N, D–16
– data alarm, Mix.E, D–17
– data alarm, Mix.L, D–17
– data alarm, Over.E, D–17
– data alarm, Reag.S, D–17
– data alarm, Samp.C, D–18
– data alarm, Samp.S, D–18
– erratic result, D–74
– flow of analysis, A–96
– internal standard value, D–76
– IS bath, A–94
– low values, D–78
– measuring system, A–95
– overview, A–40
– pipetting system, A–94
– reagent compartment, A–95
– reagents for applications, B–109
– replace reagents, B–49
– rinse station, A–95
– sipper mechanism, A–94
– sipper syringe, air in, D–74
– specifications, A–125
– troubleshooting, D–74
ISE.E (data alarm), D–16
ISE.N (data alarm), D–16
Isolation
– mechanical problem, D–71
IStd.E (data alarm)
– ISE unit, D–46

K

Key
– shortcut keys, B–13
– test key, B–285
Keyboard, A–46

L

Labels
– front view, A–24
– rear view, A–29
– safety labels of the system, A–22
– side view, A–26
– top view, A–27
Lamp
– green indicator lamp, e 601 module, A–109
Lifter
– See, magazine lifter.
Linearity, data alarm, D–27
Liquid flow path cleaning, e 601 module, C–141
Liquid level detection
– reagent probe, e 601 module, A–102
– Sample LLD data alarms, e 601 module, D–40
– sample probe, c 501 module, A–74
– sample probe, e 601 module, A–103

List
– calibration alarm, D–43
– data alarm, D–10
– maintenance checks, C–43
– maintenance items, C–38
– rerun, D–63
List boxes, software basics, B–8
Lists, B–9
Load list
– calibrator and QC load list, B–56
– reagent load list, B–49
Loading
– c pack, B–132
– calibrator vial, B–184
– calibrators, B–59
– control data, B–225
– controls, B–59
– routine samples, B–67, B–70
– samples and reagents, safety information, A–12
– See Downloading
Lot
– calibration, c 501 module, B–165
– calibration, e 601 module, B–167
Low level
– result data, D–61
Low results
– ISE unit, D–78
– photometric unit, D–80
Low signal level (data alarm), D–40
Low values
– chloride, D–77
– ISE internal standard, D–76
– ISE unit, D–78

M

Magazine (e 601 module)
– lifter, A–108
– magazine waste compartment, cleaning, C–153
– replace, B–145
Magazine waste compartment
– e 601 module, A–109
Main menu
– software, B–24
Maintenance
– after routine operation, B–78
– after shutdown, B–80
– background, C–34
– before shutdown, B–78
– button, B–288
– checks, list of, C–43
– concept, C–8
– daily maintenance button, B–47
– definitions, C–8
– general comments, C–6
– general maintenance, C–3
– instrument care, C–23
– instrument status, C–6
– items, list of, C–38
– maintenance types, adding and editing, C–19
– overview, C–5
– parallel, C–34
– perform background maintenance, C–36
– perform parallel maintenance, C–37
– report, C–22
– schedule, C–23
– status, B–237
– stopping background maintenance, C–37
– stopping parallel maintenance, C–37
– tracking maintenance, C–21
Maintenance (c 501 module)
– as needed maintenance, C–110
– daily maintenance, C–72
– monthly maintenance, C–88
– periodic replacement of parts, C–71
– six months maintenance, C–105
– three months maintenance, C–102
– weekly maintenance, C–81
Maintenance (c 501 module)
see Maintenance works (c 501 module)
Maintenance (cu 150)
– as needed maintenance, C–61
– daily maintenance, C–50
– monthly maintenance, C–53
– six months maintenance, C–58
Maintenance (e 601 module)
– as needed maintenance, C–147
– daily maintenance, C–122
– three months maintenance, C–144
– two weeks maintenance, C–141
– weekly maintenance, C–125
Maintenance (e 601 module)
see Maintenance works (e 601 module)
Maintenance check
– list of maintenance checks, C–43
Maintenance item
– list of maintenance items, C–38
– performing maintenance item, C–13
– system wash, C–41
Maintenance pipe, C–10
– automating instrument care, C–32
– defining and editing maintenance pipes, C–11
– deleting maintenance pipe, C–12
– performing maintenance items or pipes, C–13
– recommended maintenance pipes, C–32
– select power up pipe, C–15
– select sleep pipe, C–17
– select start up pipe, C–16
– using maintenance pipe functions, C–15
Maintenance schedule, C–23
– as needed maintenance, C–30
– c 501 module, C–69

– cu 150, C–49
– daily maintenance, C–24
– e 601 module, C–121
– monthly maintenance, C–28
– six months maintenance, C–29
– three months maintenance, C–29
– two weeks maintenance, C–27
– weekly maintenance, C–26
Maintenance type, C–18
– defining and editing maintenance types, C–19
– indication on System Overview screen, B–47
– tracking maintenance, C–21
Maintenance works (c 501 module)
– cleaning cell covers, C–83
– cleaning cell rinse nozzles, C–79
– cleaning detergent aspiration filters, C–98
– cleaning drain port for high concentrated waste, C–80
– cleaning dust filters (behind front doors), C–100
– cleaning incubator bath, C–92
– cleaning KCl aspiration filter, C–88
– cleaning probes, C–77
– cleaning rinse station, C–85
– cleaning ultrasonic mixers, C–102
– draining the vacuum tank, C–113
– removing and cleaning the IS bath, C–87
– replacing nozzle tips, C–110
– replacing photometer lamp, C–105
– replacing reaction cells, C–90
– rinsing reaction system, C–81
Maintenance works (cu 150 module)
– cleaning instrument surfaces, C–61
Maintenance works (cu 150)
– cleaning concentrated waste tank, C–50
– cleaning cooling fans, C–60
– cleaning filter of rack sampler unit, C–57
– cleaning inlet water filter, C–58
– cleaning water tank, C–53
Maintenance works (e 601 module)
– cleaning incubator, C–132
– cleaning instrument surfaces, C–114, C–154
– cleaning liquid flow path, C–141
– cleaning microbead mixer, C–136
– cleaning mixing station and separation stations, C–129
– cleaning probes and sippers, C–122
– cleaning ProCell/CleanCell aspiration tubes, C–147
– cleaning ProCell/CleanCell nozzles, C–125
– cleaning ProCell/CleanCell stand, C–147
– cleaning reagent disk and compartment, C–150
– cleaning rinse stations, C–138
– cleaning solid waste compartment, C–152
– cleaning vortex mixer, C–134
– replacing pinch valve tubing, C–144
– replacing ProCell/CleanCell reservoirs, C–125
Management
– operator-realated reagent, c 501 module, B–129
Manual QC, B–203
Manual rerun, B–72
Manual system start-up, B–37
Markings
– test selection matrix, B–87
Masking
– application auto masking, B–269
– calibration, B–169
– module, C–36
Mean-R, B–203
Measurement
– automatic QC, B–232
– cartridges, A–95
– data, accumulation of QC results, B–203
– request QC measurement, B–209
Measuring
– calibrators, B–60
– controls, B–60
Measuring area components, e 601 module, A–103
Measuring cell
– construction, A–104
– temperature alarm, D–34
Measuring cell, e 601 module, A–104
Mechanical problems
– isolation, D–71
Mechanical safety, A–12
Mechanism
– open/close cap, e 601 module, A–102
Menu
– main menus, B–24
– menu tabs, software basics, B–7
Method comparison
– e 601 module, D–94
Methods
– accumulation methods for QC results, B–203
– QC, B–201
Microbead mixer
– clean, C–136
– e 601 module, A–102
Minimum sample volume
– c 501 module, A–123
Mix.E (data alarm)
– ISE unit, D–17
– photometric unit, D–27
Mix.L (data alarm)
– ISE unit, D–17
– photometric unit, D–27
Mixing station
– vortex, A–106
Mode
– barcode or non-barcode mode, B–205
Mode,see status
Module
– assigning tests, B–292
– dimensions, A–115
– inactivating, B–294
– masking, C–36

– trouble on each channel in module, D–62
– trouble on each module, D–62
Module overview area
– color scheme, B–43
– system overview, B–39
Module set
– configuration, B–291
Module to module variance, e 601 module, D–93
Modules
– c 501 module, A–39
– control unit, A–37
– core unit, A–38
– e 601 module, A–40
– overview, A–33, A–36
– second rotor module, A–41
Monitor, touchscreen, A–46
Monitoring
– reaction, c 501 module, A–89
Mono.E (data alarm)
– e 601 module, D–47
Monotony of curve, D–47
Mouse, A–46

O

Online Help
– buttons, B–17
– Direct Help, B–23
– F1 Help, B–15
– favorite tab, B–22
– navigation, B–18
– printing topic, B–23
– searching, B–19
– system, B–15
Operating conditions, A–116
– electrical, A–116
– water requirements, A–116
Operation
– calibrating tests during operation, B–198
– check system alarms, B–38
– erroneous, D–60
– loading routine samples, B–67
– maintenance after shutdown, B–80
– maintenance before shutdown, B–78
– overview, B–33
– preroutine operation, B–47
– preventive action, B–44
– printing data report, B–76
– processing rerun, B–71
– processing samples, B–66
– reagent load list, B–49
– routine operation, B–65
– shutting down the analyzer, B–78
– start processing, B–68
– starting inspection, B–34
– status, B–237
– stop sampling, B–77
– system overview screen, B–39
Operator
– qualification, A–6
– troubleshooting responsibility, D–68
Operator-related reagent management, B–129
Options, option buttons, B–8
Over.E (data alarm)
– e 601 module, D–36
– ISE unit, D–17
– photometric unit, D–28
Overview
– application, B–255
– c 501 module, A–71
– calibration menu, B–170, B–206
– daily operation, B–33
– data review screen, B–93, B–101
– e 601 module, A–99
– modules, A–33, A–35
– reagent overview, c 501 module, B–146
– reagent overview, e 601 module, B–152
– system overview screen, B–24, B–39
– test selection screen, B–85
Overview, system modules, A–36

P

Parallel maintenance, C–34, C–37
Parameter
– updating application, B–262
Parameter Check
– status, B–237
Parameter Download button, B–62
Parameters
– description of application parameters, B–264
– description of application parameters, Analyze tab, B–265
– description of application parameters, Calib. tab, B–267
– description of application parameters, Range tab, B–271
– downloading applications, B–259
– system, B–282
– system, restoring, B–316
– system, saving, B–314
Patient data, archiving, B–96
Photometer, A–83
– flow of analysis, A–86
Photometer lamp, C–105
Photometric tests
– configuration, B–255
– multiple reagents, D–84
– qualitative fields, B–277
– technical limit, B–276
– troubleshooting, D–85

Photometric unit, A–83
– calibration alarm, Dup.E, D–45
– calibration alarm, S1A.E, D–48
– calibration alarm, SD.E, D–49
– calibration alarm, Sens.E, D–49
– calibration alarm, Std.E, D–52
– calibration failure, D–23
– calibrators and controls, B–115
– checking calibrations of photometric tests, B–173
– data alarm, >Cuvet, D–24
– data alarm, >I.H, D–15, D–26
– data alarm, >Index, D–15, D–25
– data alarm, >Kin, D–26
– data alarm, >Lin, D–27
– data alarm, >Proz, D–28
– data alarm, >React, D–29
– data alarm, >Rept/<Rept, D–29
– data alarm, >Test/<Test, D–31
– data alarm, Abs, D–21
– data alarm, ADC.E, D–22
– data alarm, Cal.E, D–23
– data alarm, Calc.?, D–22
– data alarm, ClcT.E, D–22
– data alarm, CmpT.?, D–23
– data alarm, CmpT.E, D–23
– data alarm, Det.S, D–25
– data alarm, Edited, D–25
– data alarm, Mix.E, D–27
– data alarm, Mix.L, D–27
– data alarm, Over.E, D–28
– data alarm, ReagEx, D–29
– data alarm, Samp.?, D–30
– data alarm, Samp.C, D–30
– data alarm, Samp.S, D–31
– diluent for photometric tests, B–115
– flow of analysis, A–86
– load **cobas c** pack, B–53
– overview, A–39
– reagents for applications, B–113
– specifications, A–124
– troubleshooting, D–79, D–82
– troubleshooting, biased enzyme results, D–85
– troubleshooting, control, D–83
– troubleshooting, erratic results, D–80, D–82
– troubleshooting, high results, D–79
– troubleshooting, low results, D–80
– troubleshooting, sample, D–83
– troubleshooting, single test, D–83
– wavelengths, A–124
Photomultiplier tube, A–104
Pinch valve
– replace tubing, e 601 module, C–144
Pipe
– status, B–237
Pipe functions, C–15
– power up pipe, C–15
– sleep pipe, C–17
– start up pipe, C–16
Pipe setting, button, B–288
Pipetter
– See, syringe.
Placing, PreClean, D–87
Post Operation
– status, B–237
Potassium
– ion-selective electrode, A–95
Power
– interruption, A–7
– no electrical power, D–71
– power supply, A–116
– start-up analyzer, B–35
– start-up analyzer, automatic, B–36
– start-up analyzer, manual, B–37
– switches, core unit, A–56
Power interruption, A–7
Power OFF
– extended, c 501 module, C–115
– extended, e 601 module, C–156
Power ON, B–35
– after extended power OFF, c 501 module, C–116
– after extended power OFF, e 601 module, C–160
– automatic, B–36
– manual, B–37
Power Up
– status, B–237
– troubleshooting, D–70
Power Up Pipe
– status, B–237
Power up pipe
– buttons, B–288
– selecting, C–15
PreClean
– area, e 601 module, A–105
– bottles, e 601 module, A–110, A–111
– dispenser, e 601 module, A–105
– gripper, e 601 module, A–105
– insufficient, D–42
– replace, B–139, B–143
– replace when empty, B–139
– replace when not empty, B–143
– sipper, e 601 module, A–105
– temperature out of range, D–42
– trouble placing, D–87
– vortex mixing station, A–106
Prediluted sample, B–73
Prep.E (data alarm)
– ISE unit, D–47
Preparation
– status, B–237
Preparing a DVD disk, B–248
Preroutine operation, B–47
Pretreatment, B–123

Preventive action
– check box, B–44
– in daily routine, B–44
Pre-wash area
– clean stations, C–129
Printer, A–46
Printing
– data report, B–76
printing
– Online Help topic, B–23
Probes
– clean probes, c 501 module, C–77
– clean probes, e 601 module, C–122
– does not descend to liquid surface, D–73
– wash reagent probe, c 501 module, B–302
– wash reagent probe, e 601 module, B–308
– wash sample probe, c 501 module, B–306
– wash sample probe, e 601 module, B–309
ProbeWash
– replace when empty, B–140
– station, e 601 module, A–102
Procedure
– troubleshooting, D–67
ProCell
– bottles, A–111
– clean aspiration tubes, C–147
– clean nozzles, C–125
– clean stand, C–147
– replace reservoir, C–125
– replace trouble, D–86
– replace when empty, B–137
– replace when not empty, B–140
ProCell/CleanCell
– clean nozzles, C–125
– replace reservoir, C–125
Processing
– additional samples, B–69
– rerun, B–71
– routine samples, B–66
– start measurement, B–68
– STAT samples, B–69
Programming
– auto QC measurements, B–232
– calculated tests, B–295, B–296
– cell wash, c 501 module, B–304
– compensated test, B–299
– special wash, c 501 module, B–301
– special wash, e 601 module, B–308
– system parameters, B–282
PT link, B–123

Q

Q2.5SD (data alarm), D–57
Q3SD (data alarm), D–56
QC
– accumulation of QC results, B–203, B–219
– after calibration, B–203
– assigning racks and positions, B–223
– automatic measurement, B–232
– automatic measurement, configuring, B–232
– automatic QC, B–202
– checking results, B–61
– configuring realtime QC, B–216, B–219
– controls for e 601 module, B–127
– controls for photometric unit, B–115
– cumulative QC, B–201
– error 1 (1-3S), D–56
– error 2 (1-2.5S), D–57
– individual QC, B–201
– loading controls, B–59
– manual QC, B–203
– Mean-R, B–203
– measurement, system implementations, B–202
– measuring controls, B–60
– methods, B–201
– printing load list, B–56
– realtime QC, B–201, B–202
– request, B–57
– request QC measurement, B–209
– select button, B–55
– software screen, B–28
– standby reagent QC, B–57, B–202, B–210
– timeout, B–202, B–208
– unloading QC racks from the rack rotor, B–233
– validating, B–61
– X-R, B–203
QC cumulative screen, B–221
QC individual screen, B–213
QC install screen, B–224
QC menu
– QC cumulative screen, B–221
– QC individual screen, B–213
– QC install screen, B–224
– QC run status screen, B–211
– QC status screen, B–206
QC points
– adding comments, B–215
– excluding, individual points, B–215
QC run status screen, B–211
QC status screen, B–206
Qualification
– operator, A–6
Qualitative fields
– photometric application parameters, B–277
Quality criteria
– calibration, e 601 module, B–168

R

R4SD (data alarm), D–57
Rack, A–59
– assigning QC rack, B–223
– barcodes, A–118
– clean surfaces, C–62
– rack delivery button, B–288
– rerun, assign or delete manually, B–92
– sample, A–60, A–121
– trays, A–59
– unloading QC racks from the rack rotor, B–233
Rack Collect End
– status, B–237
Rack Collect End (Restart Disabled)
– status, B–237
Rack delivery
– button, B–288
Rack rotor, A–58
Rack rotor, to inactivate, B–244
Rack sampler, A–53
– rack loader, A–54
– rack unloader, A–54
Rack sampler unit
– clean filter, C–57
Rack tray
– clean surfaces, C–64
Random error, realtime QC, D–57
Reaction bath
– c 501 module, A–82
Reaction cell
– washing, c 501 module, B–304
Reaction cell rinse unit, c 501 module, A–84
Reaction disk, A–82
– c 501 module, A–81
– e 601 module (incubator disk), A–103
Reaction monitoring
– c 501 module, A–89
Reaction system
– cell rinse nozzles, replace nozzle tips, C–110
– clean the cell cover, C–83
– replace reaction cells, C–90
– rinse the reaction system (c 501 module), C–81
– specifications, c 501 module, A–123
– specifications, e 601 module, A–126
Reag.F (data alarm)
– e 601 module, D–36
Reag.H (data alarm)
– e 601 module, D–37
Reag.S (data alarm)
– e 601 module, D–37
– ISE unit, D–17
Reag.T (data alarm)
– e 601 module, D–37
Reagent
– auxiliary reagents, c 501 module, A–91
– auxiliary reagents, e 601 module, A–110
– auxiliary, c 501 module, B–116
– auxiliary, e 601 module, B–127
– characteristics, D–62
– e 601 module application, B–119
– ISE application, B–109
– loading, safety information, A–12
– management system, A–79
– operator-related reagent management, B–129
– photometric application, B–113
– pipetter, c 501 module, A–77
– pipetting system, A–77
– Pretreatment, B–123
– probe, c 501 module, A–77
– registration, manual, B–131
– reload, e 601 module, B–133
– replace, c 501 module, B–136
– replace, e 601 module, B–54, B–137
– replace, ISE unit, B–49
– software screen, B–26
– standby reagent QC, B–57, B–202, B–210
– storage compartment, c 501 module, A–76
– syringe, c 501 module, A–78
– trouble attributed, D–62
Reagent compartment
– c 501 module, A–76
– e 601 module, A–101
– e 601 module, cleaning, C–150
– ISE unit, A–95
Reagent concept
– c 501 module, B–109
– e 601 module, B–119
Reagent disk
– cover does not open/close, e 601 module, D–86
– e 601 module, A–102
– e 601 module, cleaning, C–150
– See also, Reagent compartment.
Reagent disk temperature, D–37
Reagent Dump
– status, B–237
Reagent Load List
– daily operation, B–49
– printing, B–49
Reagent menu
– reagent setting screen, B–130
– reagent status screen, B–135
Reagent overview button, B–129, B–146
Reagent overview window, B–146
– c 501 module, B–146
– e 601 module, B–152
Reagent Preparing, B–48
Reagent probe
– c 501 module, A–77
– does not descend to liquid surface, D–73

– e 601 module, A–102
– washing, c 501 module, B–302
– washing, e 601 module, B–308
Reagent Registration
– status, B–237
Reagent setting screen, B–129, B–130
Reagent status screen, B–129, B–135
Reagent storage
– c 501 module, A–76
– e 601 module, A–101
Reagent syringe
– bubbles in, D–73
– c 501 module, A–78
– e 601 module, A–102
Reagent system
– c 501 module, A–76
– specifications, c 501 module, A–124
– specifications, e 601 module, A–127
Reagent troubleshooting
– photometric unit, D–83
Reagent Unloading
– status, B–237
ReagEx (data alarm)
– e 601 module, D–36
– photometric unit, D–29
Realtime QC, B–201, B–216
– configuring realtime QC, B–216, B–219
Rear view
– c 501 module, A–92
Reassign
– control values, B–229
Reconnect
– status, B–237
Recovery of controls
– e 601 module, D–92
Reference cartridge
– ISE measuring system components, A–95
Registration
– c pack, B–114, B–121
– reagent, manual, B–131
Reloading
– c pack, B–114
– reagent, e pack, B–133
Repeat limit
– change, B–276
Repeat limit (data alarm)
– e 601 module, D–38
– ISE unit, D–18
– photometric unit, D–29
Replacement
– periodic replacement of parts, c 501 module, C–71
Replacing
– AssayCup, B–145
– AssayTip, B–145
– CleanCell when empty, B–137
– CleanCell when not empty, B–140
– consumables, e 601 module, B–144
– magazine, B–145
– PreClean when empty, B–139
– PreClean when not empty, B–143
– ProbeWash when empty, B–140
– ProCell when empty, B–137
– ProCell when not empty, B–140
– ProCell/CleanCell, D–86
– reagent, c 501 module, B–136
– reagent, e 601 module, B–137
– reagent, ISE unit, B–49
– reagents, e 601 module, B–54
Report
– customize, B–310
– maintenance report, C–22
– name, B–275
Report format
– comparison of
data monitor format and report format, B–313
– configuration, B–310
Reproducibility, poor, D–61
Requesting
– calibrations, B–57
– controls, B–57
– QC measurement, B–209
– tests manually, B–88
Rerun
– automatic, B–71
– list, D–63
– manual, B–72
– performed by system, B–71
– processing, B–71
– rack, assign or delete manually, B–92
– with diluted samples, B–72
Restoring
– system parameters, B–316
Result data
– at high level, D–61
– at low level, D–61
– drifting, D–60
Results
– 3rd Results Acceptance, B–284
– accumulation of QC results, B–219
– biased enzyme, D–85
– checking calibration and QC, B–61
– erratic, e 601 module, D–87
– erratic, ISE unit, D–74
– printing individual, B–76
– ready for validation, B–74
Review Alarm screen, B–38
Reviewing
– calibration data, B–173
Rinse station
– c 501 module, cleaning, C–85
– e 601 module, cleaning, C–138
– ISE unit, c 501 module, A–95

– microbead mixer rinse station, e 601 module, A–101
– PreClean area, e 601 module, A–105
– reagent probe rinse station, e 601 module, A–101
– reagent probe rinse stations, c 501 module, A–78
– sample probe rinse station, c 501 module, A–75
– sample probe rinse station, e 601 module, A–103
– sipper probe rinse station, e 601 module, A–103
Roche service representative, calling, D–68
Routine operation
– procedures, B–65
– workflow, B–33
Routine QC, B–202
Rsp1.E (data alarm)
– ISE unit, D–48
Rsp2.E (data alarm)
– ISE unit, D–48
Rules
– calibration, c 501 module, B–162
– calibration, e 601 module, B–166
Run
– start a run, B–68

S

S10Xa (data alarm), D–59
S10Xw (data alarm), D–59
S1A.E (data alarm)
– photometric unit, D–48
S2-2Sa (data alarm), D–58
S2-2Sw (data alarm), D–58
S4-1Sa (data alarm), D–58
S4-1Sw (data alarm), D–59
Safety
– electrical, A–11
– mechanical, A–12
Safety classifications, A–5
Safety information
– barcode readers, A–30
– general safety information, A–3
Safety labels, A–22
– front view, A–24
– rear view, A–29
– side view, A–26
– top view, A–27
Safety precautions, A–6
Samp.? (data alarm)
– photometric unit, D–30
Samp.B (data alarm)
– e 601 module, D–38
Samp.C (data alarm)
– e 601 module, D–38
– ISE unit, D–18
– photometric unit, D–30
Samp.H (data alarm)
– e 601 module, D–39
Samp.O (data alarm)
– c 501 module, D–30, D–39
Samp.S (data alarm)
– e 601 module, D–39
– ISE unit, D–18
– photometric unit, D–31
Sample
– additional, B–69
– barcode, unreadable, B–91
– barcodes, A–118
– clot (data alarm), e 601 module, D–38
– concentration, decreased/increased, D–63
– container, A–66, A–120
– cup, A–66
– hovering (data alarm), e 601 module, D–39
– identification, A–67
– insoluble contaminants, safety information, A–14
– loading routine samples, B–67
– loading STAT sample, B–70
– loading, safety information, A–12
– pipetter, c 501 module, A–74
– prediluted, B–73
– processing, B–66
– processing STAT sample, B–69
– rack, A–60
– racks, specifications, A–121
– rerun, B–71
– reruns with diluted samples, B–72
– results, B–74
– selecting test, B–69
– tracking sample on analyzer, B–103
– troubleshooting, photometric unit, D–83
– tube, A–66
– unreadable barcode, B–91
Sample barcode reader (sample identification), A–67
Sample clogging (data alarm)
– ISE unit, D–18
Sample clot (data alarm)
– e 601 module, D–38
Sample Data Clear, B–48
Sample probe
– c 501 module, A–74
– e 601 module, A–103
– not descending to liquid surface, D–73
– washing, c 501 module, B–306
– washing, e 601 module, B–309
Sample rack, A–60
– clean surfaces, C–62
Sample search, B–103
Sample selection list, Data Review screen, B–94, B–101
Sample syringe
– bubbles in, D–73
– c 501 module, A–75
– e 601 module, A–104
Sample Tracking button, B–64
Sample Tracking window, B–103

Sample volumes
– minimum, c 501 module, A–123
Sampling stop, B–77
Sampling system
– specifications, c 501 module, A–123
– specifications, e 601 module, A–126
Screen
– accessibility, B–12
– alarm screen, B–38
– calibration, B–27
– calibration calibrator, B–182
– calibration install, B–185
– calibration status, B–170
– cannot access another screen, D–72
– data review, B–93, B–101
– general description, B–5
– guidance prompt, B–7
– menu tabs, B–7
– QC, B–28
– QC cumulative, B–221
– QC individual, B–213
– QC install, B–224
– QC run status, B–211
– QC status, B–206
– reagent, B–26
– reagent setting, B–129, B–130
– reagent status, B–129, B–135
– start screen, B–68
– status line, B–6
– system overview, B–24, B–198
– utility, B–29
– workplace, B–25
SD.E (data alarm)
– photometric unit, D–49
Searching, Online Help, B–19
Second rotor module
– module overview, A–41
Selecting
– items on touchscreen, A–46
– power up pipe, C–15
– sleep pipe, C–17
– start up pipe, C–16
– test, B–66, B–69
Selecting tests, start-up calibration, B–181
Sens.E (data alarm)
– photometric unit, D–49
Shortcut keys, B–13
Shut Down
– status, B–237
Shutdown
– maintenance after shutdown, B–80
– maintenance before shutdown, B–78
Sig.E (data alarm)
– e 601 module, D–50
Signal
– maximum (data alarm), e 601 module, D–50
– minimum (data alarm), e 601 module, D–50
Sipper
– mechanism, ISE unit, A–94
– PreClean area, e 601 module, A–105
– probe for measuring cells, e 601 module, A–104
– syringe, e 601 module, A–104
Sleep
– status, B–237
Sleep mode, B–79
Sleep pipe, selecting, C–17
SLLD.E (data alarm)
– e 601 module, D–40
SLLD.N (data alarm)
– e 601 module, D–40
Slop.E (data alarm)
– ISE unit, D–51
Sodium
– high value, D–77
– ion-selective electrode, A–95
Software
– basics, B–3
– calibration screen, B–27
– cannot access screen, D–72
– general description, B–5
– main menu screens, B–24
– QC screen, B–28
– reagent screen, B–26
– screen accessibility, B–12
– utility screen, B–29
– workplace screen, B–25
Software basics, B–3
– menu tabs, B–7
– windows, B–12
software basics, B–9
Software version
– determining, C–43
Solid waste
– clean compartment, e 601 module, C–152
– container, e 601 module, A–109
– e601 module, B–144
– empty, e 601 module, B–145
Solutions
– reagents and cleaning solutions, c 501 module, A–91
– reagents and cleaning solutions, e 601 module, A–110
Sound, abnormal, A–20
Special wash, B–301
– programming, c 501 module, B–301
– programming, e 601 module, B–308
Specifications
– c 501 module, A–123
– core unit, A–122
– e 601 module, A–126
– ISE unit, A–125
– photometric unit, A–124
– reaction system, c 501 module, A–123
– reaction system, e 601 module, A–126

– reagent system, c 501 module, A–124
– reagent system, e 601 module, A–127
– sample containers, A–120
– sample racks, A–121
– sampling system, c 501 module, A–123
– sampling system, e 601 module, A–126
– system, A–115
Spillage, safety precaution, A–20
Stand By
– status, B–237
Standard buttons, B–11
Standby bottle QC *see also* Standby reagent QC
Standby reagent QC, B–57, B–202, B–210
Start
– analyzer, B–34
– inspection, B–34
– measurement, B–68
– processing samples, B–68
– screen, B–68
Start a run, B–68
Start Up Pipe
– status, B–237
Start up pipe, selecting, C–16
Starting inspection, B–34
STAT
– loading STAT sample, B–70
– port, core unit, A–55
– processing STAT sample, B–69
– requesting test manually, B–90
– selecting test, B–69
Status
– backup wait for rack setting, B–237
– colors, B–6
– initialize, B–237
– instrument, B–237
– maintenance, B–237
– operation, B–237
– parameter check, B–237
– pipe, B–237
– post operation, B–237
– power up, B–237
– power up pipe, B–237
– preparation, B–237
– rack collect end, B–237
– rack collect end (restart disabled), B–237
– reagent dump, B–237
– reagent registration, B–237
– reagent unloading, B–237
– reconnect, B–237
– shut down, B–237
– sleep, B–237
– stand by, B–237
– Start up pipe, B–237
– stop, B–237
Status line, B–6
– color scheme, B–41
– instrument status, B–237
Std.E (data alarm)
– photometric unit, D–52
Stop
– sampling, B–77
– shutdown analyzer, B–78
– status, B–237
Support
– calling Roche service representative, D–68
Syringe
– bubbles in, D–73
Sys.E (data alarm)
– e 601 module, D–54
SysClean
– e 601 reagents, B–127
– liquid flow path cleaning, C–141
SysR.S (data alarm)
– e 601 module, D–41
SysR.T (data alarm)
– e 601 module, D–41
System
– c 501 module characterristics, A–71
– configuration, B–281
– e 601 module characteristics, A–99
– implementations for QC measurements, B–202
– manual start-up, B–37
– Online Help, B–15
– reagent management, A–79
– reagent, c 501 module, A–76
– safety labels, A–22
– specifications, A–115
– status, B–237
System modules, overview, A–36
System Overview screen, B–24, B–198
– color scheme, module overview area, B–43
– color scheme, Work Flow Guide, B–41
– operation, B–39
– preventive action, B–44
– Work Flow Guide, B–44
System parameters
– 3rd Results Acceptance, B–284
– programming, B–282
– restoring, B–316
– saving, B–314
– stored by Parameter Read/Write, B–315
System specifications, A–115
System wash, maintenance item, C–41

T

Technical limit
– change, c 501 module, B–276
– data alarm, e 601 module, D–41

Test
– 3rd Results Acceptance, B–284
– activate control tests, B–231
– assigning tests or profiles to test keys, B–285
– assigning to module, B–292
– calculated test, B–295
– calibrating tests during operation, B–198
– calibrations points, D–84
– checking calibrations of e 601 tests, B–178
– checking calibrations of ISE tests, B–177
– checking calibrations of photometric tests, B–173
– compensated test, B–299
– define automatic rerun, e 601 module, B–275
– define report name, e 601 module, B–275
– high results, photometric unit, D–79
– immunological tests, B–255
– low results, photometric unit, D–80
– multiple photometric tests, D–84
– photometric tests, B–255
– request manually, B–88
– selecting tests for start-up calibration, B–181
– single test, D–83
– trouble, D–62
Test matrix, B–86
– colors, B–86
– markings, B–87
– test selection screen, B–86
Test results list
– Data Review screen, B–95, B–102
Test selection
– downloaded form Host, B–66
– for STAT samples, B–69
– manual selection, B–88
Test selection screen
– colors, B–86
– markings, B–87
– overview, B–85
– test matrix, B–86
Text boxes, software basics, B–8
Third-party software, A–19
Timeout QC, B–202, B–208
Tip
– See, AssayTip.
Touchscreen
– does not come on, D–72
– hard to see, D–72
– monitor, A–46
Track samples, B–103
Tray, A–59
– clean surfaces, C–64
Trouble
– attributed to characteristics of reagent, D–62
– for each test, D–62
– on each analytical module, D–62
– on each channel in same module, D–62
Troubleshooting, D–65
– application, D–67
– barcode read error, B–91
– c 501 module, D–68, D–74, D–79
– computer, D–67
– e 601 module, D–69, D–86
– general, D–67
– immunoassay, D–69
– instrument, D–70
– ISE unit, D–74
– operator's responsibility, D–68
– photometric tests, D–85
– photometric unit, D–79
– Power Up, D–70
– procedures, D–67
Tube, A–59
– sample, A–66

U

Ultrasonic mixer
– c 501 module, reaction disk area, A–82
– clean the ultrasonic mixers, C–102
– data alarms, D–27
Unit of measure
– change for an application after calibration, B–273
– defining, B–273
Unloading
– c pack, B–114, B–132
– QC racks from the rack rotor, B–233
Unreadable sample barcodes, B–91
Updating
– application, B–262
– inventory, e 601 module, B–156
USB device, B–251
USB storage device, A–18
User interface
– buttons, B–10
– check boxes, B–9
– general description, B–5
– list, B–9
– list boxes, B–8
– main menus, B–24
– menu tabs, B–7
– option buttons, B–8
– text boxes, B–8
Utility, software screen, B–29

V

Vacuum system, c 501 module, A–91
Vacuum tank, C–113
Validating
– calibration, B–61
– QC, B–61

Value
– edit concentration value, B–193
– edit control value, B–228
– expected value ranges, B–278
– high sodium, D–77
– internal standard, high/low, D–76
– low chloride, D–77
– low ISE values, D–78
– reassign control values, B–229
Variances
– among e modules, D–93
Volume control
– c pack, B–114, B–121
Vortex mixing station, A–106
– clean, C–134
– e 601 module, A–108

W

Waste
– cleaning drain port (c 501 module), C–80
– compartment, e 601 module, A–109
– emptying solid waste, e 601 module, B–145
– safety information, A–11
– solid waste container, e 601 module, A–109
– solid, e 601 module, B–144
Water leakages, A–20
Water supply, A–57
Water tank, C–53
Wavelengths, photometric unit, A–124
WB.S (data alarm)
– e 601 module, D–42
WB.T (data alarm)
– e 601 module, D–42
Windows
– confirmation, B–12
– software basics, B–12
Work Flow Guide
– area, B–44
– color scheme, system overview screen, B–41
– guide through preventive action, B–44
Workplace
– software screen, B–25
Workplace menu
– data review screen, B–93, B–101
– test selection screen, B–85

X

X-R, B–203

Notes G